SWF

PARTS BOOK

Multi-Head
E-Series Flat Type

E-WD(X)920-75

PME-110725

Notice

1. 본 책자는Parts Book으로 제작되었으므로 매뉴얼로 사용 불가합니다.
2. 조에 속한 파트는 개별 조립 시 제품의 파손 또는 자수 불량이 발생될 수 있어
   해당 파트에 대한 주문 시에는 조 품목으로만 구입이 가능합니다.
3. 당사의 Part Book은 다음과 같은 순서로 분류되어 있으니
   제품을 구입한 소비자께서는 다음과 같은 순서로 제품을 검색하여 주십시오.

   1) Machine Layout
   2) Section
   3) Part List

※소모성 부품은 자수 기계의 보증 기간과 상관 없음.

1. This is a parts book. It cannot be used as a manual.
2. The parts classified as ass'y items may cause damage to the machine or
   bad embroidery when they are separately assembled.
   Hence, when they are ordered, they can be purchased as ass'y items only.
3. The Part Book is classified as below and users could search products in the following order.

   1) Machine Layout
   2) Section
   3) Part List

※Consumable parts shall not be guaranteed even in warranty period.

Information

A. Structure of Part Book
1. Machine Layout

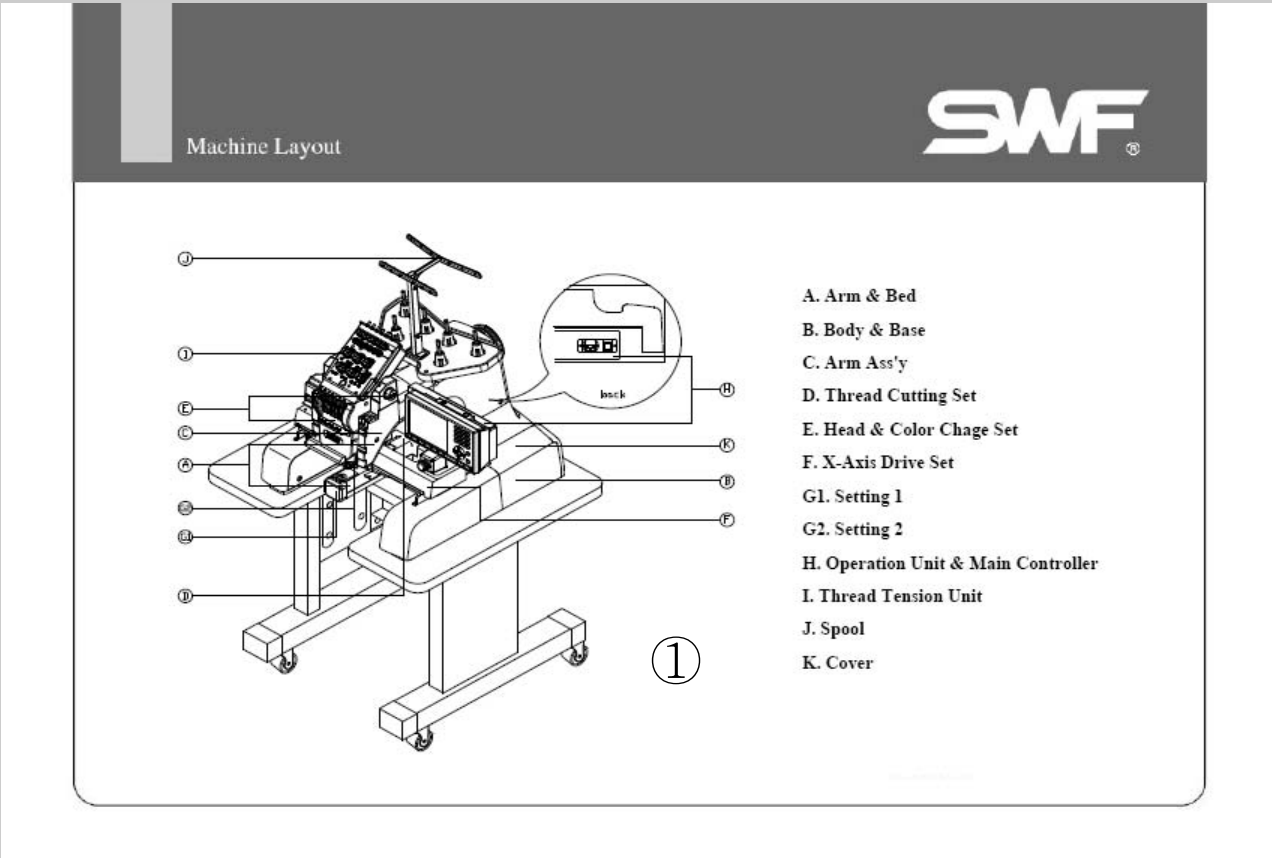

Information

A. Structure of Part Book
  2. Section
    ① : Index Number
    ② : Index Group
    ③ : Related Parts
      Ex) A-1, A-2, A-3...

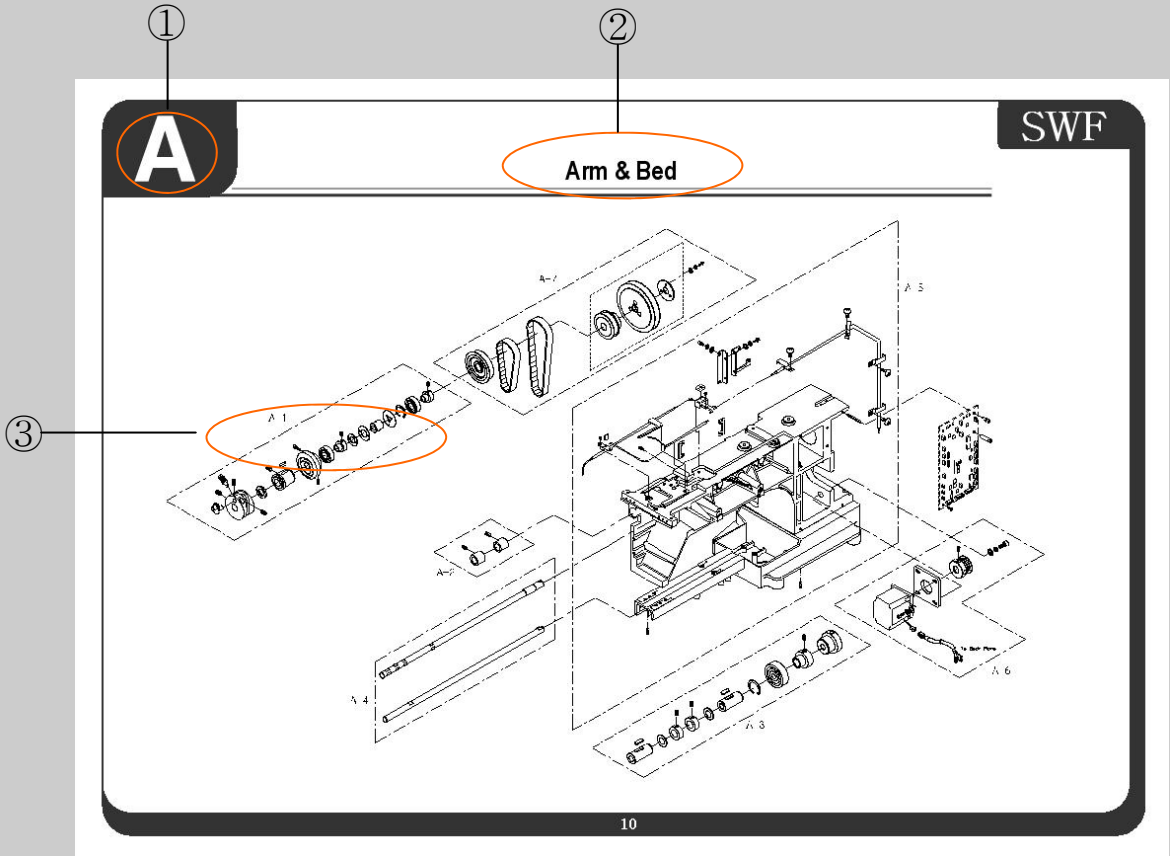

Information

A. Structure of Part Book
3. Part List

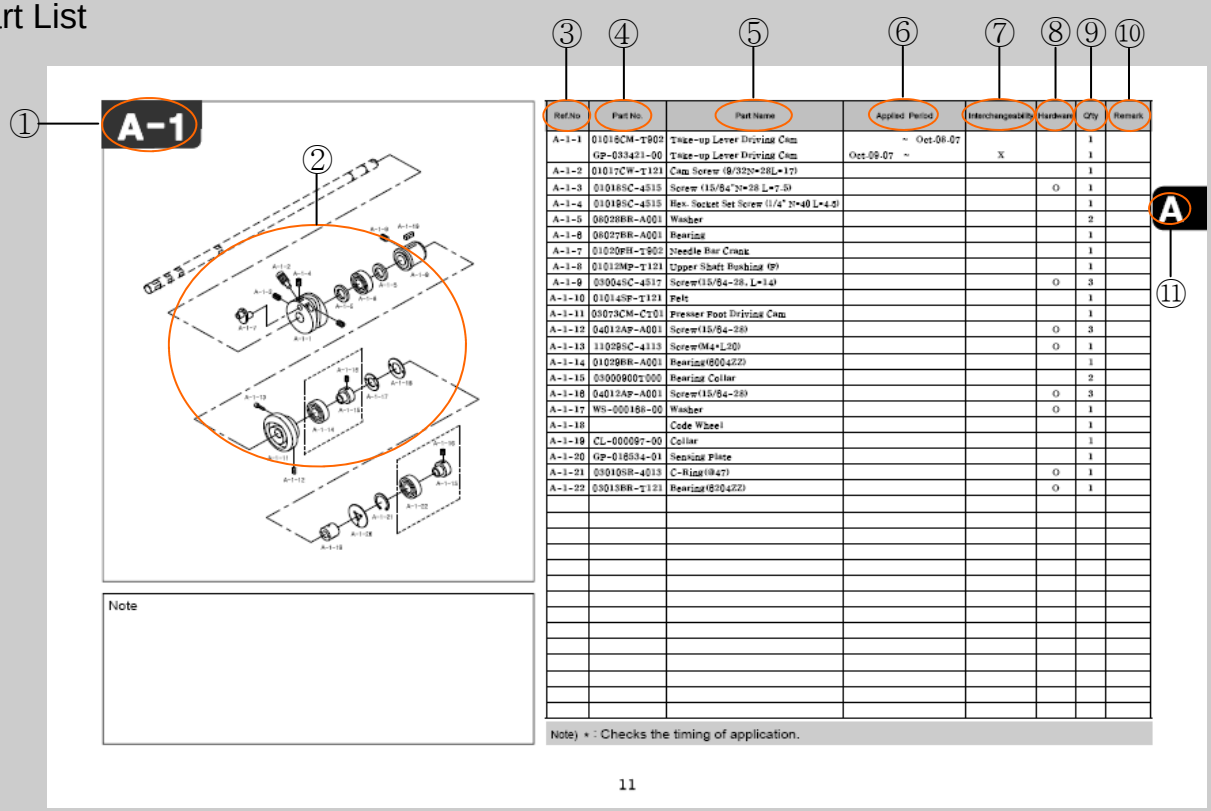

A-1

Note

Ref.No	Part No.	Part Name	Applied Period	Interchangeability	Hardware	Qty	Remark
A-1-1	01016CM-T902	Take-up Lever Driving Cam	~ Oct-08-07			1	
	GP-033421-00	Take-up Lever Driving Cam	Oct-09-07 ~	X		1	
A-1-2	01017CW-T121	Cam Screw (9/32N*28L*17)				1	
A-1-3	010188C-4515	Screw (15/64"N*28 L*7.5)			O	1	
A-1-4	010198C-4515	Hex. Socket Set Screw (1/4" N*40 L*4.5)				1	
A-1-5	08028BR-A001	Washer				2	
A-1-6	08027BR-A001	Bearing				1	
A-1-7	01020FH-T902	Needle Bar Crank				1	
A-1-8	01012MP-T121	Upper Shaft Bushing (9)				1	
A-1-9	030048C-4517	Screw(15/64-28, L=14)			O	3	
A-1-10	01014SF-T121	Felt				1	
A-1-11	03073CM-C101	Presser Foot Driving Cam				1	
A-1-12	04012AP-A001	Screw(15/64-28)			O	3	
A-1-13	110298C-4115	Screw(M4*L20)			O	1	
A-1-14	01029BR-A001	Bearing(6004ZZ)				1	
A-1-15	03000900T000	Bearing Collar				2	
A-1-16	04012AP-A001	Screw(15/64-28)			O	3	
A-1-17	WS-000168-00	Washer			O	1	
A-1-18		Code Wheel				1	
A-1-19	CL-000097-00	Collar				1	
A-1-20	GP-016534-01	Sensing Plate				1	
A-1-21	030108R-4015	C-Ring(Ø47)			O	1	
A-1-22	03013BR-T121	Bearing(6204ZZ)			O	1	

Note) * : Checks the timing of application.

11

① Index Number
Ex) A-1, A-2...

② Parts View

Information

A. Structure of Part Book

③ Ref. No

④ Part No

Ex)

Category	CODE	Remark
Old part	16009SC-4113	
New part	**AS**-000000-00	Set parts (Set 구성품)
	GP-000000-00	Instrumental parts (기구적 파트)
	EP-000000-00	Electrical parts (전기적 파트)

⑤ Parts Name : 파트들의 고유 품명을 표기

: Refers to unique names of parts

⑥ Applied Period

Ex1) 2007년2월10일 적용, 2008년7월10일 폐기

-> Feb.10.07 ~ Jul.10.08

Ex1) Applied from Feb. 10, 2007, To on July 10, 2008

-> Feb.10.07 ~ Jul.10.08

Ex2) 2007년 2월 10일 부터 파트북 발행일 까지 적용

-> Feb.10.07 ~

Ex2) Applied from Feb. 10, 2007

-> Feb.10.07 ~

Information

A. Structure of Part Book

⑦ Interchangeability

O : 구 부품을 신 부품으로 교환 가능
신 부품을 구 부품으로 교환 가능
: It is interchangeable between old and new part.

X : 구 부품을 신 부품으로 교환 불가능
신 부품을 구 부품으로 교환 불가능
: It is not interchangeable between old and new part.

△ : 구 부품을 신 부품으로 교환 가능
신 부품을 구 부품으로 교환 불가능
: It is interchangeable by new part only.

⑧ Hardware : 시중에서 구매 할 수 있는 부품
: Parts that can be purchased in the market

⑨ Q'ty : 사용 파트의 수량을 표기
: Quantity of part

⑩ Remark

⑪ Index Number

Machine Layout

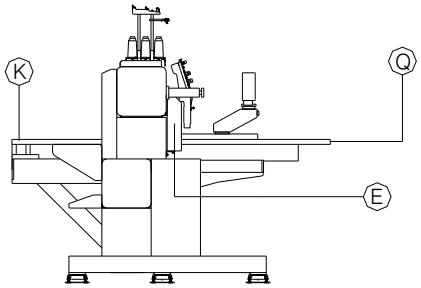

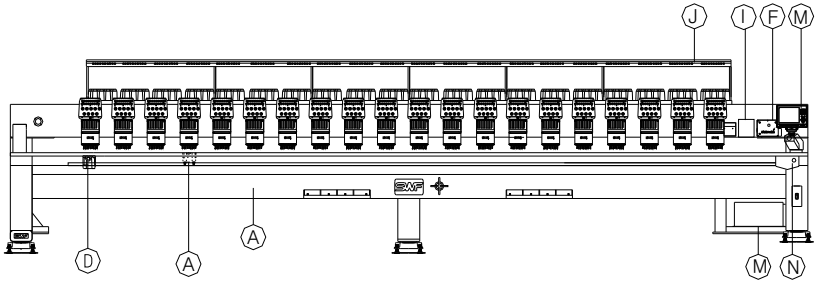

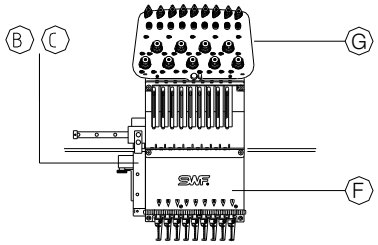

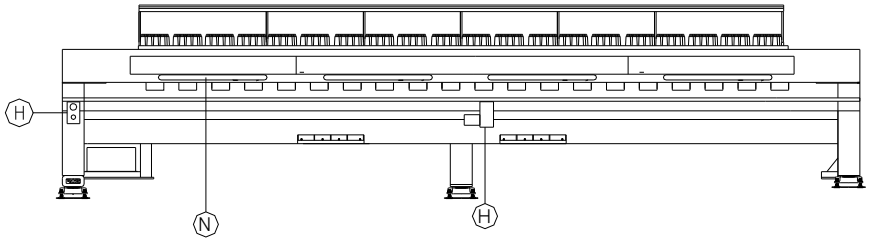

A. Beam Body & Bed

B. Arm 1

C. Arm 2

D. Thread Cutting Drive System

E. Main Drive System

F. Head

G. Thread Tension Unit

H. X-Y Axis Drive System

I. Setting

J. Thread Stand

K. Work Table

L. Cable

M. Con box & OP box

N. Lamp & Switch

O. Bobin Winder

P. Cover

Q. Embroidery Frame

CONTENT

A1	Beam Body & Bed (Y-Stroke 1000 Below)	10
A2	Beam Body & Bed (Y-Stroke 1200 Above)	13
B	Arm 1	15
C	Arm 2	22
D	Thread Cutting Set	29
E	Main Drive System	35
F	Head & Color Change	40
G	Thread Tension Unit	47
H1	X-Y Drive (Y-Stroke 1000 Below)	51
H2	X-Y Drive (Y-Stroke 1200 Above)	62
I	Setting	73
J	Spool	79
K1	Table (Y-Stroke 1000 Below)	82
K2	Table (Y-Stroke 1200 Above)	85
L	Cable	89
M	Con Box & O/P Box	93
N	Lamp & Switch	101
O	Bobbin Winder	105
P	Cover	108
Q1	Frame (Y-Stroke 1000 Below)	111
Q2	Frame (Y-Stroke 1200 Above)	116
R	Index	121

Beam Body & Bed (Y-Stroke 1000 Below)

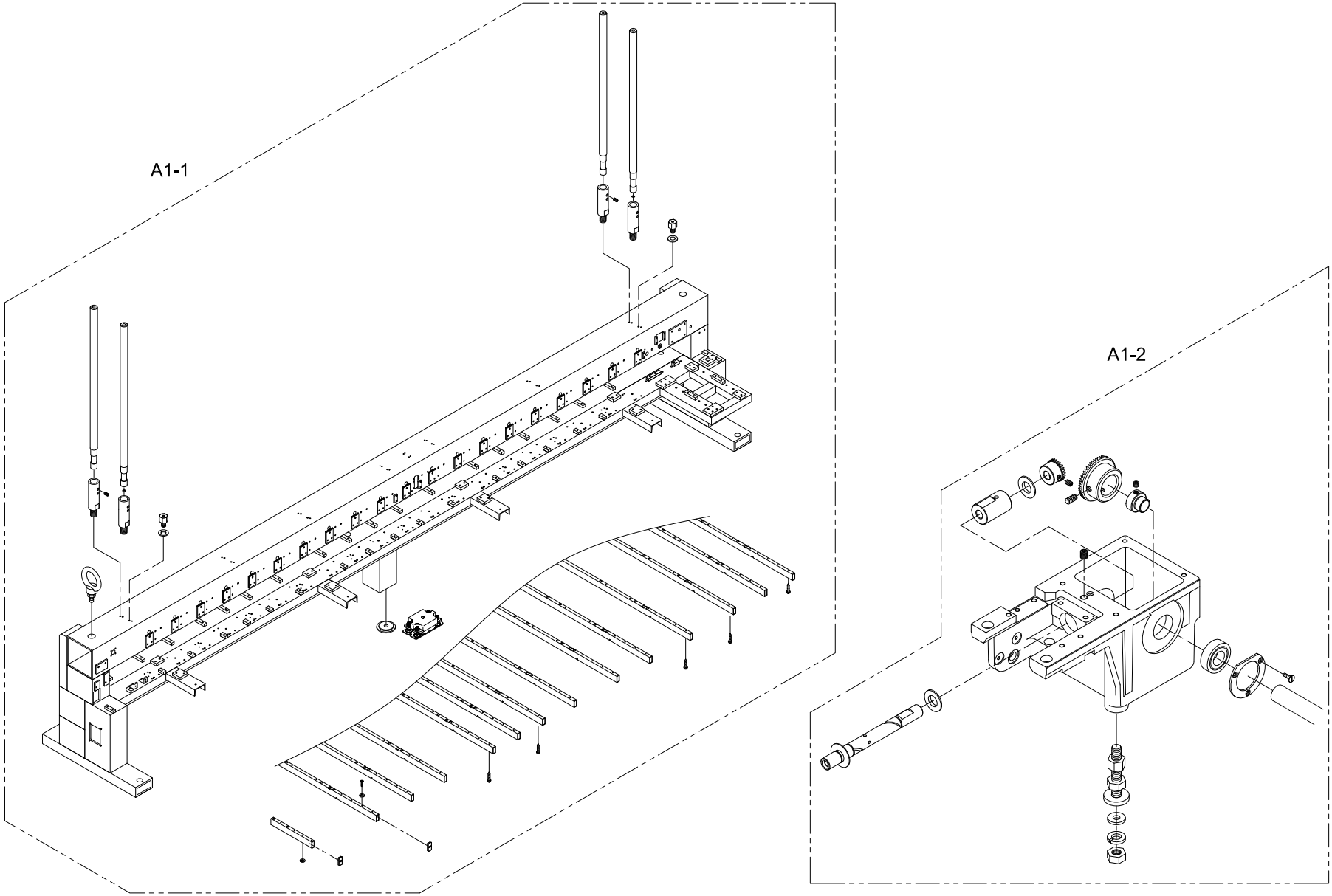

A1-1

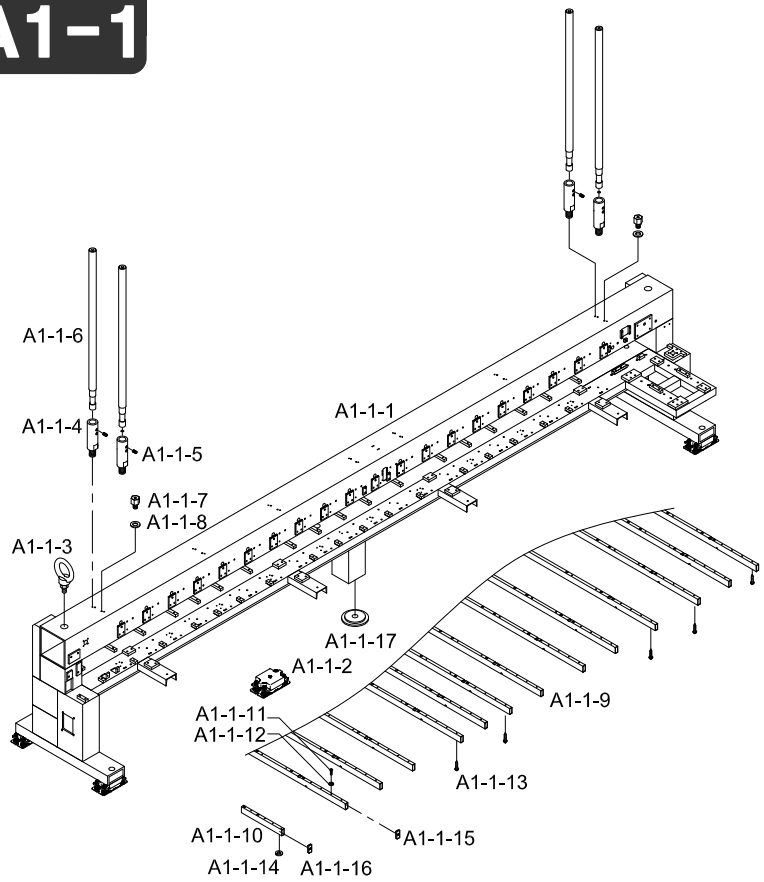

Note

Ref.No	Part No.	Part Name	Applied Period	Interchangeability	Hardware	Q'ty	Remark
A1-1-1	AS-005696-00	Beam & Body	Nov,08,06 ~	X		1	
A1-1-2	12300900I000	Mount				5	
A1-1-3	01100400B000	I Bolt(Set)				2	
A1-1-4	12014SC-A001	Spool Stand Bolt				20	
A1-1-5	04014SC-4517	Hex.Socket Set Screw(M5*L5)			O	40	
A1-1-6	01001500B000	Spool Stand (L=280)				20	
A1-1-7	12013SC-A001	Spool Plate Fixing Bolt(M8*L22)			O	20	
A1-1-8	15077SW-2111	Washer (@8)			O	20	
A1-1-9	16005CW-A021	Table Support(A)(L=1400)			O	18	
A1-1-10	16004CW-A021	Table Support(C)(L=490)				1	
A1-1-11	16009SC-4113	Hex. Socket Screw (M10*L25)			O	110	
A1-1-12	01008SW-9115	Spring Washer (@10)			O	110	
A1-1-13	02087SC-4329	Tapping Screw (@5*L25)			O	305	
A1-1-14	16014SW-4115	Spring Washer (@8)			O	109	
A1-1-15	16005RB-A001	Table Support End Cap (L)				4	
A1-1-16	GP-003757-00	TABLE SUPPORT END CAP	Aug,19,04 ~	X		36	
A1-1-17	12301100I000	Mount				5	

A1-2

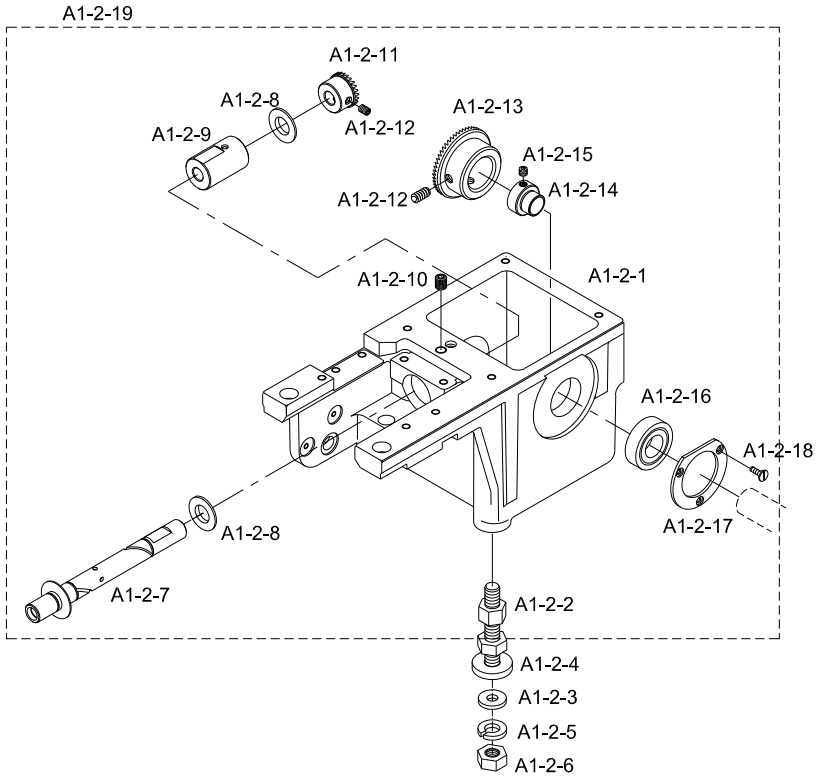

Note

Ref.No	Part No.	Part Name	Applied Period	Interchangeability	Hardware	Q'ty	Remark
A1-2-1	GP-032699-00	Rotary Hook Base (Bevel)	Jul,18,07 ~ Nov,21,07	X		20	
	GP-032699-01		Nov,21,07 ~ Feb,23,09	△			
	GP-032699-02		Feb,23,09 ~	△			
A1-2-2	04028SC-A001	Stud Bolt(M10*L69)			O	60	
A1-2-3	04029SW-A001	Stud Bolt Washer (@8)			O	60	
A1-2-4	04030SW-A001	Stud Bolt Washer (L) (@8)			O	60	
A1-2-5	15095SW-3115	Spring Washer (@8)			O	60	
A1-2-6	04032SN-A001	Hex. Nut (M8)			O	120	
A1-2-7	01100210B000	Hook Shaft				20	
A1-2-8	02004BR-T121	Hook Shaft Space				40	
A1-2-9	GP-037044-00	Hook Shaft Bush	Feb,14,08 ~	X		20	
A1-2-10	04012AF-A001	Hook Shaft Bush Screw (15/64-28)			O	20	
A1-2-11	01101900U000	Hook Shaft Gear				20	
A1-2-12	06060MC-4517	Hex. Socket Set Screw (M6*L6)			O	84	
A1-2-13	01101700U000	Low Shaft Gear				20	
A1-2-14	01102000B000	Bearing Bushing				20	
A1-2-15	04016AF-A001	Cam Collar Screw				126	
A1-2-16	04026BR-A001	Ball Bearing 6003zz			O	20	
A1-2-17	01100400H000	Bearing Cover				20	
A1-2-18	15064SC-A001	C.S Screw (M3*L3.5)			O	62	
A1-2-19	AS-004808-00	Bed Assy	Jun,08,06	X		20	
	AS-004808-01		Nov,17,08	△		20	

Beam Body & Bed (Y-Stroke 1200 Above)

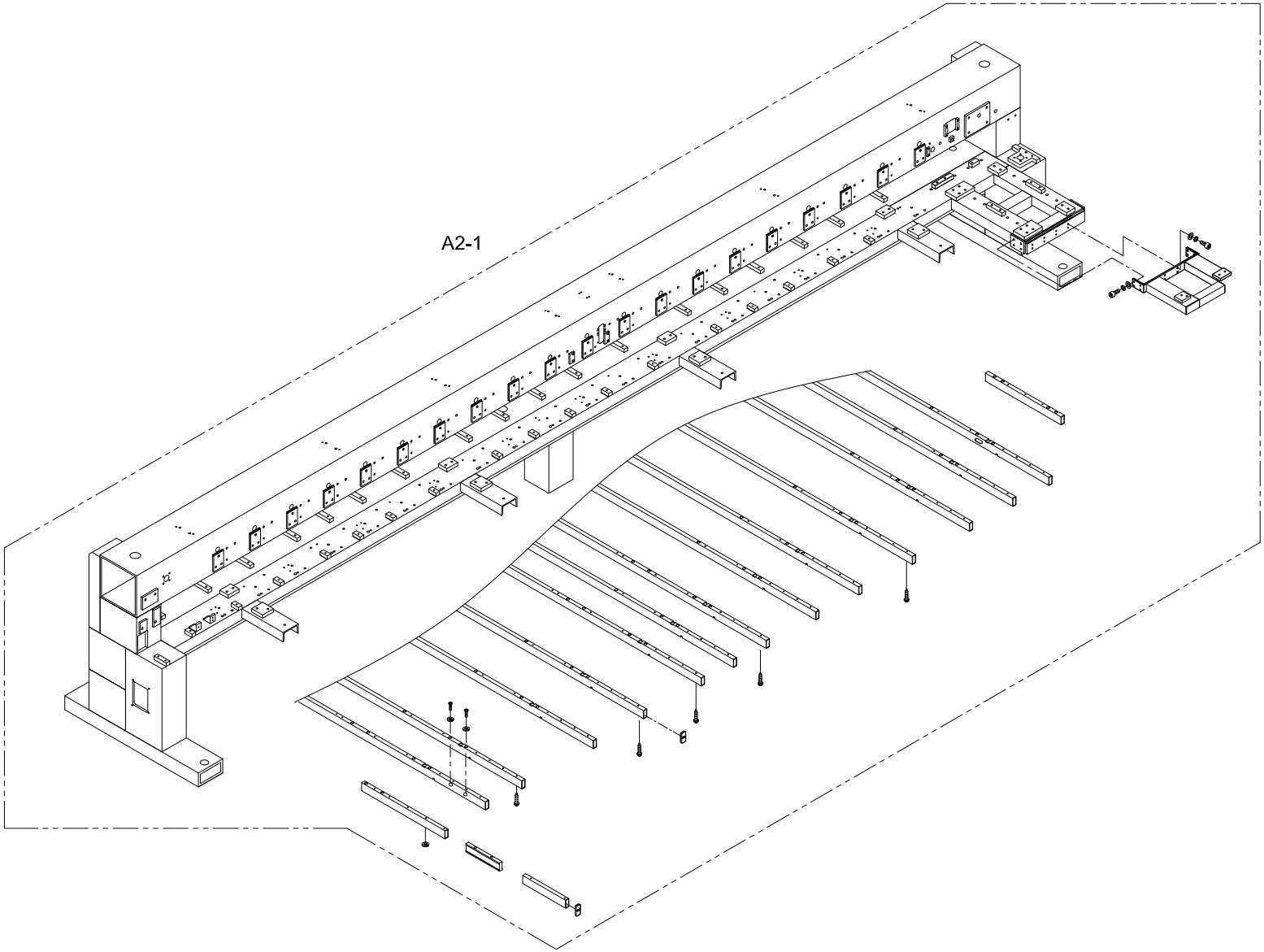

A2-1

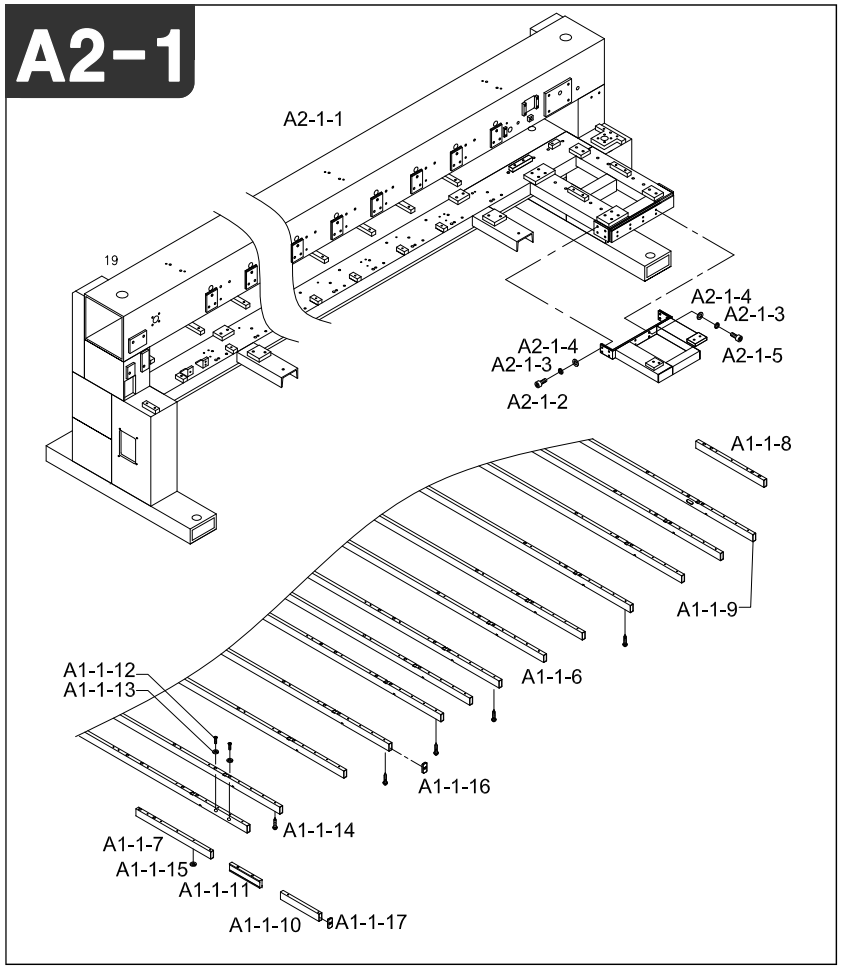

Note

Ref.No	Part No.	Part Name	Applied Period	Interchangeability	Hardware	Q'ty	Remark
A2-1-1	AS-005259-00	Beam & Body	Aug,28,06 ~ Apr,29,08	X		1	
	AS-005259-01		Apr,29,08 ~	△			
A2-1-2	01006SC-4113	Hex. Socket Bolt (M10*L50)			O	8	
A2-1-3	01008SW-9115	Spring Washer (@10)			O	16	
A2-1-4	01007SW-1111	Washer (@10)			O	16	
A2-1-5	14068SC-4113	Hex. Socket Bolt (M10*L35)				8	
A2-1-6	06000100B009	Table Support(A)(L=1754)				18	
A2-1-7	06000300B009	Table Support(C)(L=371.5)				1	
A2-1-8	06000600B009	Table Support(F)(L=664)				2	
A2-1-9	01111100B009	TABLE SUPPORT ANGLE "A-1"				1	
A2-1-10	06000900B009	Table Support(I)(L=293)			O	1	
A2-1-11	GP-010089-00	Table Support Connecting Bar B	Jun,14,05 ~ Oct,04,05	X		23	
	GP-010089-01		Oct,04,05 ~ Mar,14,08	△			
	GP-010089-02		Mar,14,08 ~ Mar,28,08	△			
	GP-010089-03		Mar,28,08 ~	△			
A2-1-12	16009SC-4113	Hex. Socket Screw (M10*L25)			O	110	
A2-1-13	01008SW-9115	Spring Washer (@10)			O	110	
A2-1-14	02087SC-4329	Tapping Screw (@5*L25)			O	305	
A2-1-15	16014SW-4115	Spring Washer (@8)			O	109	
A2-1-16	16005RB-A001	Table Support End Cap (L)				4	
A2-1-17	GP-003757-00	TABLE SUPPORT END CAP	Aug,17,04 ~	X		36	

Arm 1

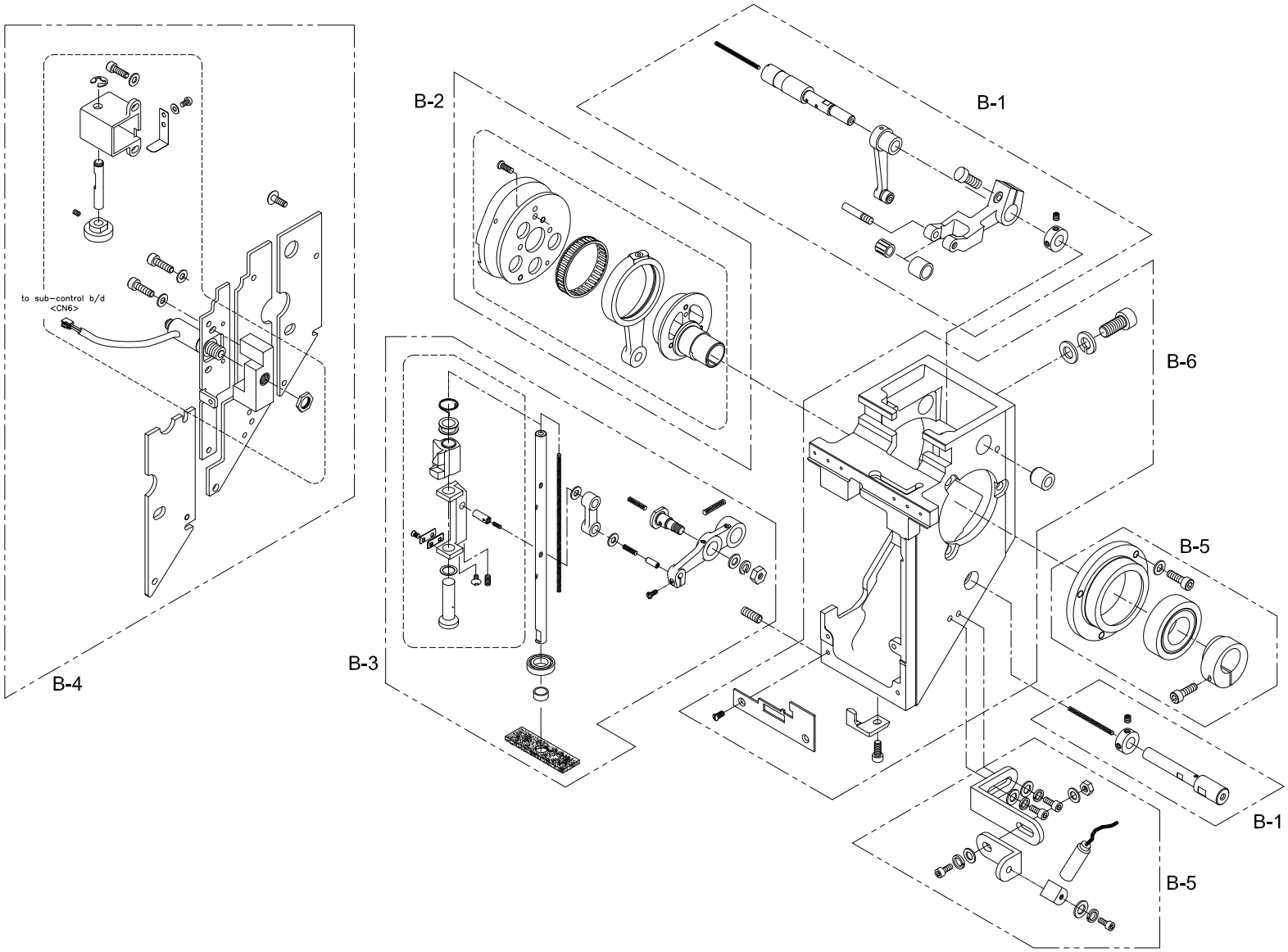

B-1

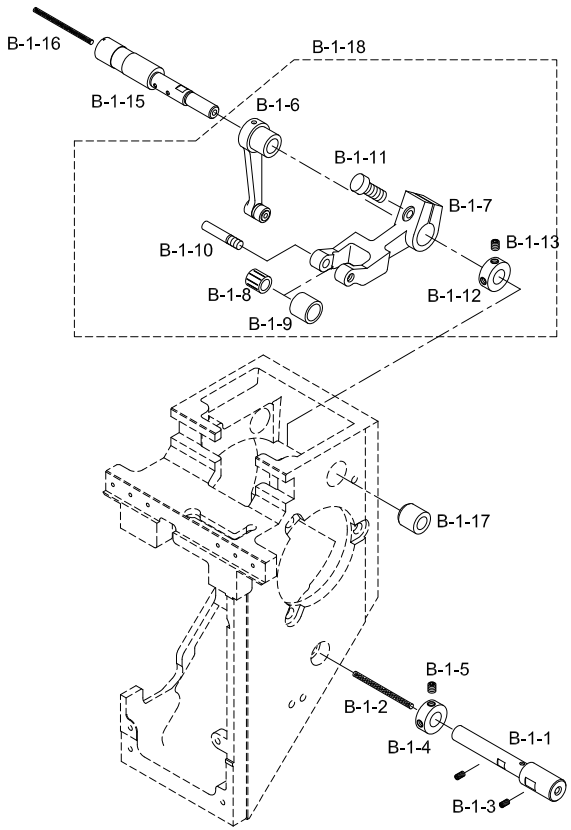

Note

Ref.No	Part No.	Part Name	Applied Period	Interchangeability	Hardware	Q'ty	Remark
B-1-1	03301800U000	Needle Bar Drive Pin				20	
B-1-2	-	Wick				20	
B-1-3	03020SC-A001	Drive Pin Screw 11/64,N40,L8			O	20	
B-1-4	01101300A000	Hook Shaft Collar				20	
B-1-5	04012AF-A001	Hook Shaft Bush Screw				20	
B-1-6	GP-011913-00	Drive Lever "A" Set	Sep,14,05 ~	X		20	
B-1-7	GP-011914-00	Take-Up Driving Lever "B"	Sep,14,05 ~	X		20	
B-1-8	04021BR-T121	Needle Bearing Kt367N (Iko)			O	20	
B-1-9	04020AF-T121	Roller For Take-Up Gear-B				20	
B-1-10	04019CW-T121	Pin Stud Screw				20	
B-1-11	02015SC-7113	Hex.Socket Bolt(M4*L10)				20	
B-1-12	03302100A000	Pin Collar				20	
B-1-13	03022SC-4517	Hex. Socket Set Screw(M4*L5)			O	32	
B-1-15	05000200U000	Take-Up Lever Drive Pin				20	
B-1-16	-	Wick				20	
B-1-17	03301200A000	Bushing				20	
B-1-18	038A0000I000	Drive Lever "A,B" Set				20	

B

B-2

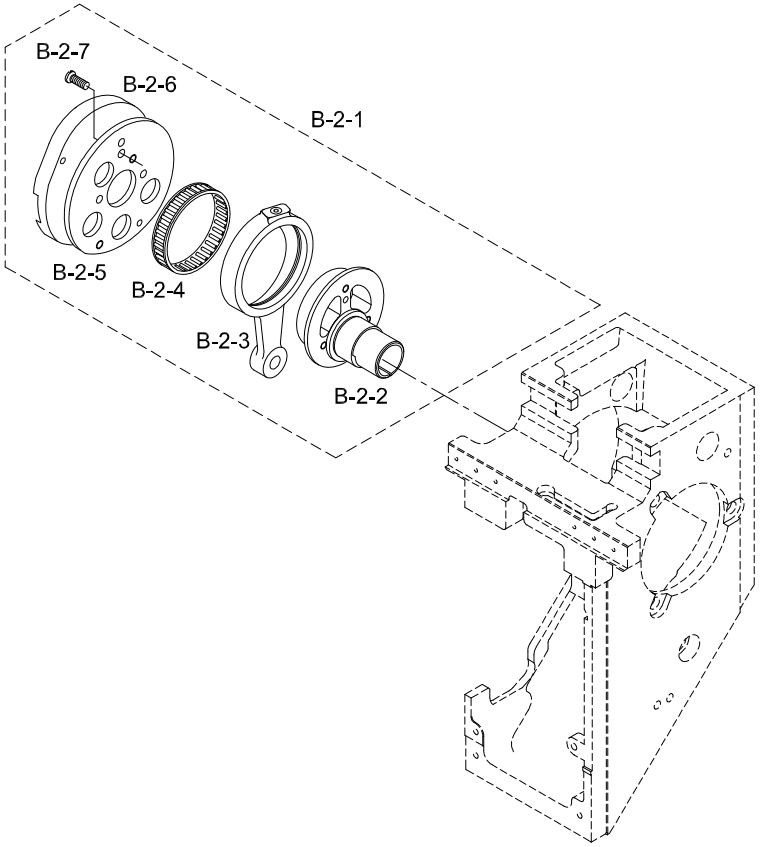

Note

Ref.No	Part No.	Part Name	Applied Period	Interchangeability	Hardware	Q'ty	Remark
B-2-1	AS-004174-00	NEEDLE DRIVING CAM SET	Feb,24,06	X		20	
	AS-004174-01		Oct,23,07	△			
B-2-2	GP-011932-00	Needle Bar Driving Cam	Sep,14,05 ~ Jan,13,09	X		20	
	GP-011932-01		Jan,13,09 ~	△			
B-2-3	GP-044788-00	Connecting Rod	Jan,13,09 ~	X		20	
B-2-4	03302900H000	Needle Case (38419)			O	20	
B-2-5	GP-011938-00	Take-Up Lever Cam Base	Sep,14,05 ~ May,28,08	X		20	
	GP-011938-01		May,28,08 ~	△			
B-2-6	GP-020960-00	TAKE-UP LEVER DRIVER CAM	Aug,28,06 ~ Oct,24,06	X		20	
	GP-020960-01		Oct,24,06 ~ Nov,10,06	△			
	GP-020960-02		Nov,10,06 ~ Nov,11,06	△			
	GP-020960-03		Nov,11,06 ~	△			
B-2-7	03007SC-A001	Cam Base Screw				60	

B

B-3

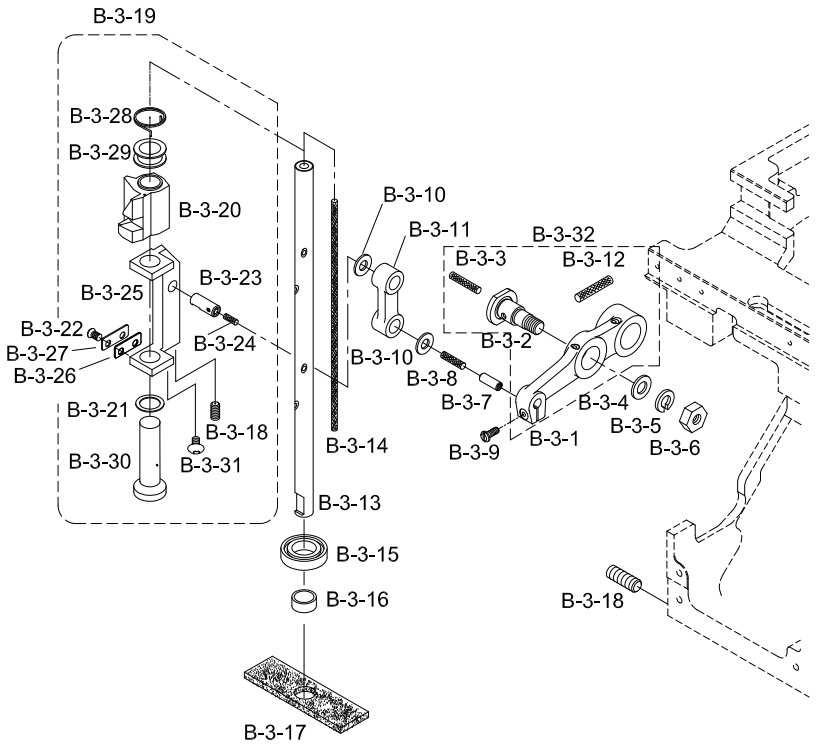

Note

Ref.No	Part No.	Part Name	Applied Period	Interchangeability	Hardware	Q'ty	Remark
B-3-1	GP-020913-00	Needle Bar Drive Lever	Aug,26,06 ~ Nov,14,06	X		20	
	GP-020913-01		Nov,14,06 ~	△			
B-3-2	03023SC-A001	Connecting Rod Stud				20	
B-3-3	-	Wick				20	
B-3-4	03025SW-1211	Washer (@6)			O	20	
B-3-5	03026SW-9115	Spring Washer (@6)			O	20	
B-3-6	03027SN-A001	Stud Nut				20	
B-3-7	03303300H000	Lever Pin				20	
B-3-8	-	Wick				20	
B-3-9	02015SC-7113	Driving Lever Pin Screw				20	
B-3-10	03034SW-A001	Reciprocator Washer				40	
B-3-11	GP-044784-00	Needle Bar Drive Rink	Jan,13,09 ~	X		20	
B-3-12	-	Wick				20	
B-3-13	GP-013117-00	NEEDLE BAR DRIVING SHAFT	Nov,07,05 ~	X		20	
B-3-14	-	Wick				20	
B-3-15	03008000H000	Ball Bearing 689 (Ntn)			O	20	
B-3-16	03008100K000	Needle Bar Drive Bearing Bush				20	
B-3-17	03053SF-A001	Felt "B"				20	
B-3-18	03020SC-A001	Drive Pin Screw 11/64,N40,L8			O	80	
B-3-19	AS-004809-00	Needle Bar Reeciprocator Set	Jun,08,06	X		20	
	AS-004809-01		Nov,14,06	△			
	AS-004809-02		Aug,22,08	△			
B-3-20	GP-013756-00	Needle Bar Reeciprocator	Dec,14,05 ~	X		20	
B-3-21	03048SW-A001	Reciprocator Washer				20	
B-3-22	03040SC-A001	Stopper Bracket Screw				40	
B-3-23	03033CW-A001	Driver Pin				20	
B-3-24	-	Wick				20	
B-3-25	GP-013762-00	Needle Driving Shaft Driver	Nov,14,05 ~ Jul,25,08	X		20	
	GP-013762-01		Jul,25,08 ~ Dec,03,08	△			
	GP-013762-02		Dec,03,08 ~ Feb,20,09	△			
	GP-013762-03		Feb,20,09 ~	△			
B-3-26	03041PR-B001	Reciprocator Stopper				20	
B-3-27	03039PR-B001	Stopper Bracket				20	
B-3-28	03045SP-B001	Jump Spring				20	
B-3-29	03046CW-B001	Jump Spring Guide				20	
B-3-30	GP-013587-00	Needle Bar Driving Shaft Bush	Dec,05,05 ~ Feb,20,09	X		20	
	GP-013587-01		Feb,20,09 ~	△			
B-3-31	03006MC-3123	Truss Screw (M3*L6)			O	20	
B-3-32	AS-005257-00	Needle Bar Drive Lever Assy	Aug,28,06	X		20	
	AS-005257-01		Oct,23,07	△		20	

B

B-4

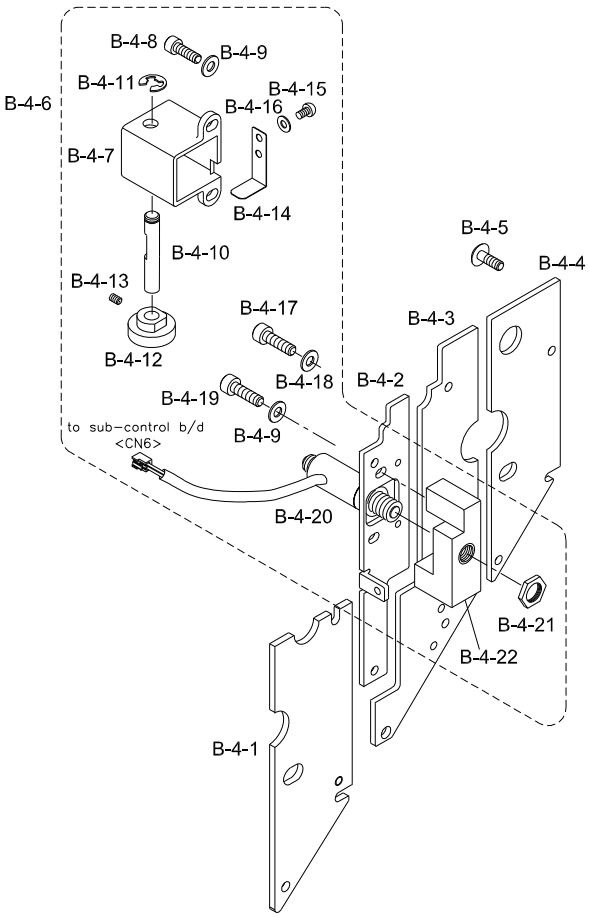

Note

Ref.No	Part No.	Part Name	Applied Period	Interchangeability	Hardware	Q'ty	Remark
B-4-1	03062PR-UK01	Side Cover "B3"				1	
B-4-2	GP-013752-00	Jumping Sol. Base Plate	Dec,14,05 ~ Aug,26,05	X		20	
	GP-013752-01		Aug,26,05 ~	△			
B-4-3	GP-013585-00	Side Cover "A"	Dec,14,05 ~ Jan,05,05	X		20	
	GP-013585-01		Jan,05,05 ~	△			
B-4-4	GP-020674-00	Side Cover "B"	Aug,21,06 ~ Jan,09,07	X		20	
	GP-020674-01		Jan,09,07 ~	△			
B-4-5	02009SC-A001	Side Cover Screw				20	
B-4-6	AS-004167-00	Jump Set	Feb,24,06 ~	X		20	
B-4-7	GP-014931-00	Jump Sol. Cover	Feb,01,06 ~	X		20	
B-4-8	02015SC-7113	Hex.Socket Bolt(M4*L10)			O	80	
B-4-9	06003SW-2111	Washer (@4)			O	60	
B-4-10	PN-000232-00	Jump Clutch Pin	Feb,01,06 ~ Feb,28,07	X		20	
	PN-000232-01		Feb,28,07 ~	△			
B-4-11	06008SW-4013	E-Ring (@5)			O	20	
B-4-12	06012CW-A001	Jump Clutch				20	
B-4-13	03050SC-4517	Hex. Socket Set Screw (M3*L3)			O	20	
B-4-14	06009PR-A001	Jump Clutch Plate Spring				20	
B-4-15	06010SC-8118	Plus Screw (M3*L4)			O	40	
B-4-16	06011SW-2111	Washer (@3)			O	20	
B-4-17	03057SC-A001	Head Rail Holder Screw				20	
B-4-18	06003SW-2111	Washer (@4)			O	20	
B-4-19	02023SC-7113	Hex. Socket Bolt (M4*L8)			O	20	
B-4-20	11009EL-A001	Jumping Sol.				20	
B-4-21	06014SN-9111	Hex.Nut				20	
B-4-22	GP-013586-00	Jump Sol. Bracket	Dec,05,05 ~	X		20	

B

B-5

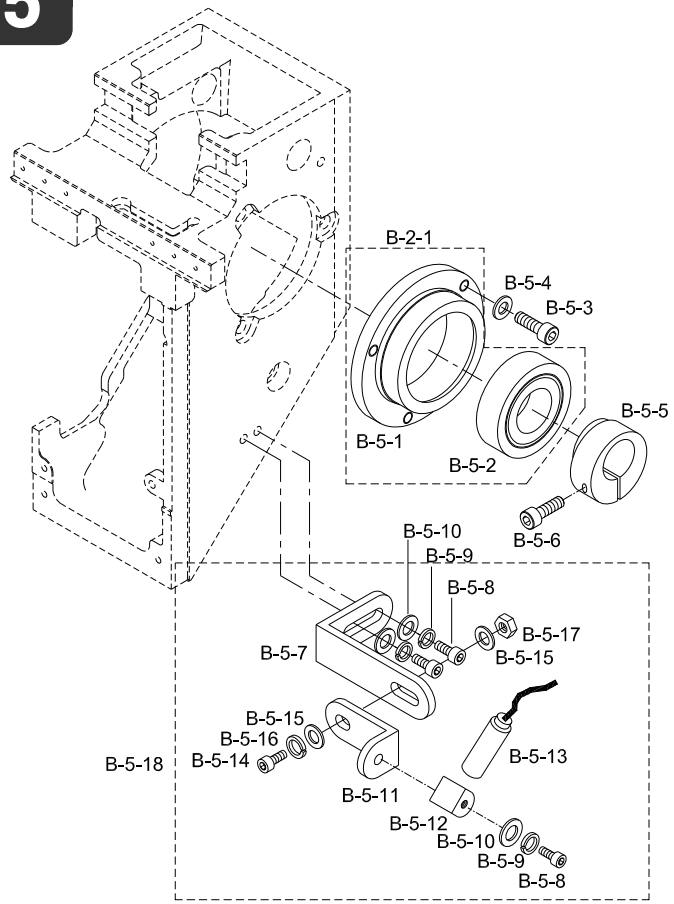

Note

Ref.No	Part No.	Part Name	Applied Period	Interchangeability	Hardware	Q'ty	Remark
B-5-1	GP-011933-00	Bearing Case	Sep,14,05 ~ Dec,16,08	X		20	
	GP-011933-01		Dec,16,08 ~	△			
B-5-2	01001100H00	Ball Bearing (6004Zz)			O	20	
B-5-3	02031SC-7113	Hex. Socket Screw(M5*L10)			O	60	
B-5-4	02030SW-B001	Bearing Case Washer				60	
B-5-5	03000110H000	Upper Shaft Bearing Collar				20	
B-5-6	05015MC-4113	Hex. Socket Bolt (M5*L15)			O	20	
B-5-7	GP-017097-00	Laser Support Connecting Bracket	Apr,13,06 ~ May,30,06	X		1	
	GP-017097-01		May,30,06 ~ Oct,02,07	△			
	GP-017097-02		Oct,02,07 ~	△			
B-5-8	02023SC-7113	Hex.Socket Bolt(M4 x L8)			O	3	
B-5-9	18014SW-3115	Spring Washer(@4)			O	3	
B-5-10	18015SW-3111	Washer(@4)			O	3	
B-5-11	GP-013331-00	Connecting Bracket for Laser	Nov,19,05 ~ Oct,02,07	X		1	
	GP-013331-01		Oct,02,07 ~	△			
B-5-12	GP-013332-00	Fixing Brakcet for Laser	Nov,19,05 ~	X		1	
B-5-13	EP-000131-00	Laser	Feb,22,06 ~	X		1	
B-5-14	07016SC-4113	Hex.Socket Bolt(M4 x L12)			O	1	
B-5-15	02028SW-9115	Spring Washer(@4)			O	1	
B-5-16	16018SW-1111	Washer(@4)			O	2	
B-5-17	15029SN-3211	Nut(M4)			O	1	
B-5-18	AS-004571-00	Laser Assy	May,02,06 ~	X		1	

B

B-6

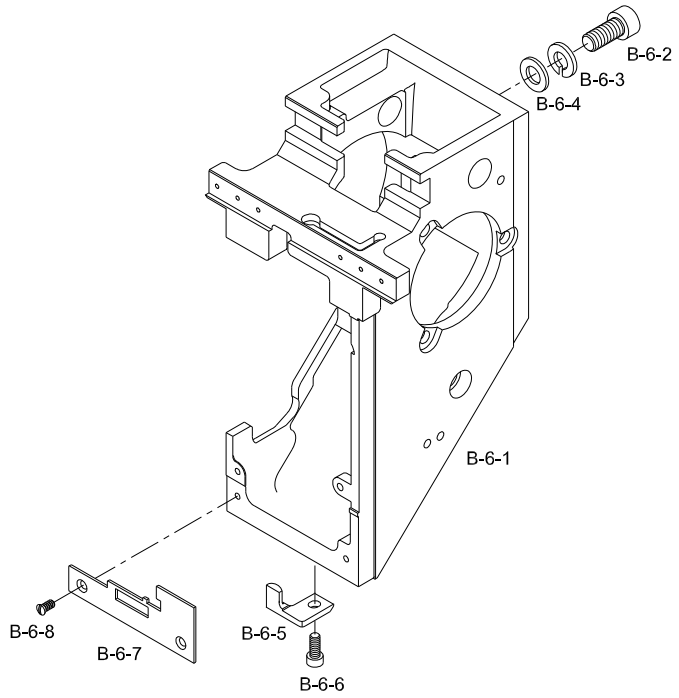

Note

Ref.No	Part No.	Part Name	Applied Period	Interchangeability	Hardware	Q'ty	Remark
B-6-1	GP-021205-00	Arm	Sep,04,06 ~ Dec,04,06	X		20	
	GP-021205-01		Dec,04,06 ~ Jan,30,09	△			
	GP-021205-02		Jan,30,09 ~	△			
B-6-2	03072MC-4113	Hex. Socket Bolt (M8*L28)			O	60	
B-6-3	15095SW-3115	Spring Washer (@8)			O	60	
B-6-4	04029SW-A001	Stud Bolt Washer(S) (@8)			O	60	
B-6-5	03056CL-B001	Head Rail Holder				20	
B-6-6	03057SC-A001	Head Rail Holder Screw				20	
B-6-7	03302600I000	Arm Guide Plate				20	
B-6-8	05062SC-A001	Thread Guide (L) Screw				40	

B

Arm 2

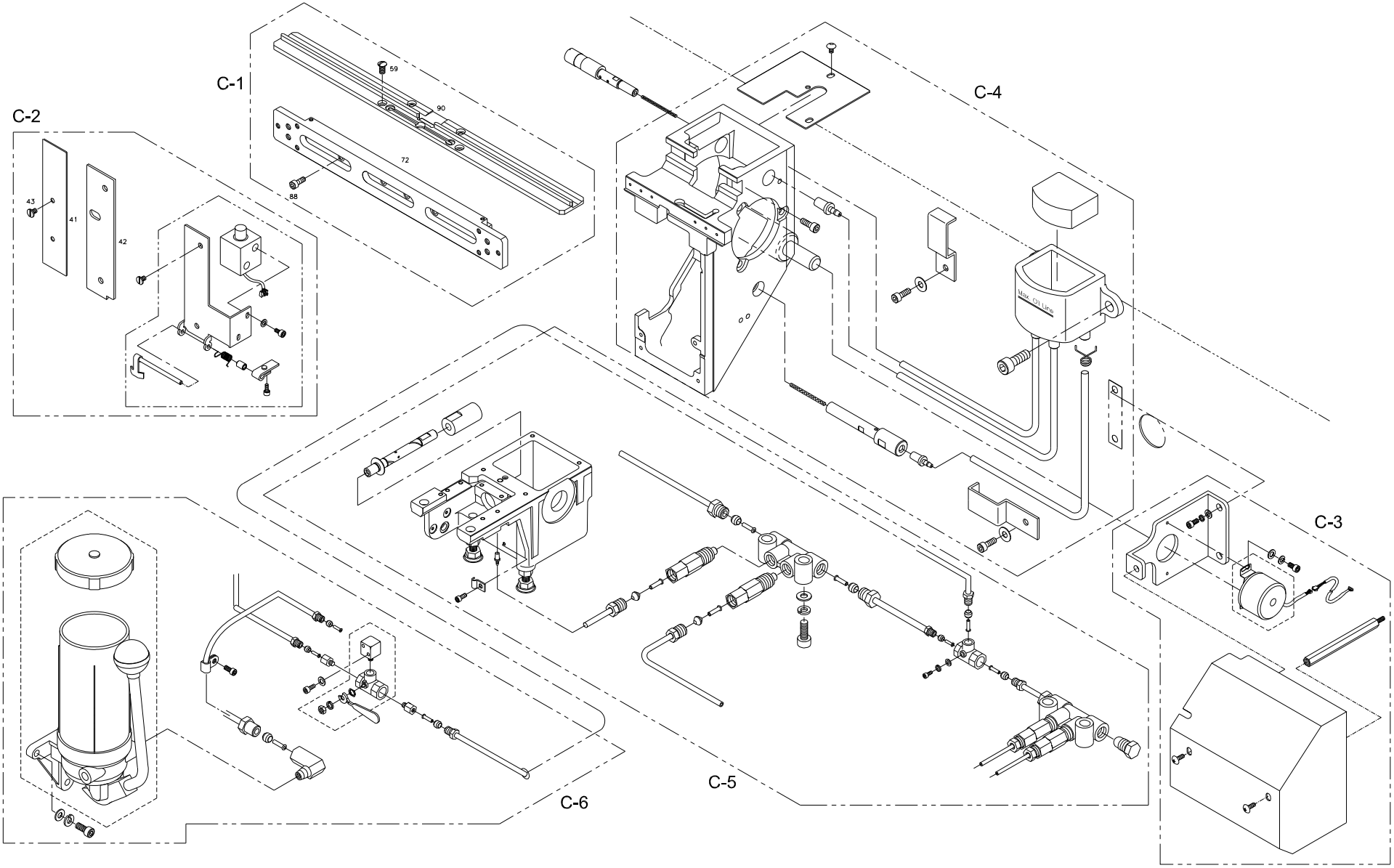

C-1

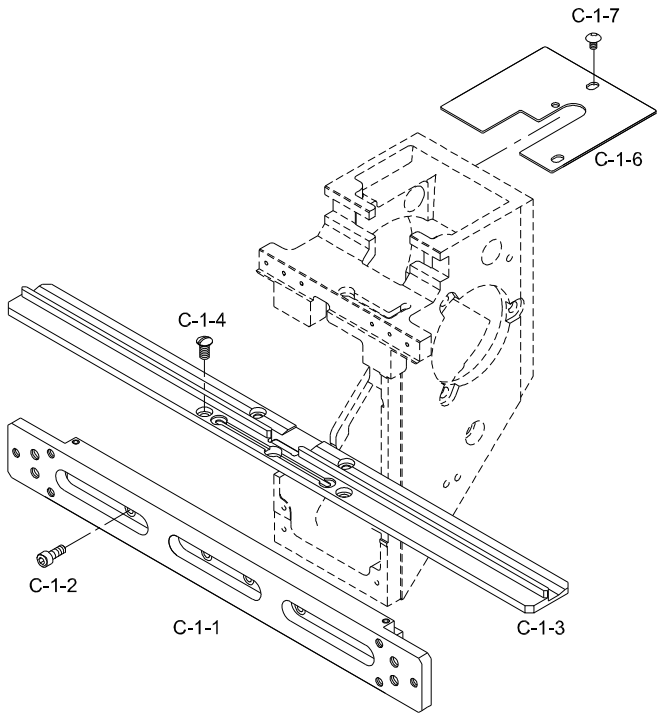

Note

Ref.No	Part No.	Part Name	Applied Period	Interchangeability	Hardware	Q'ty	Remark
C-1-1	03068LM-BB00	Lm Guide Block Set 12C				20	
	03069LM-B002	Lm Guide Block Set 9C				20	
C-1-2	03071SC-A001	Hex.Scoket Bolt (M3*L15)				80	
C-1-3	03300604U000	Take-Up Guide Rail 12C L=339				20	
C-1-4	05041SC-A001	Guide Rail Screw			O	80	
C-1-5	GP-020831-00	Arm Top Cover	Aug,24,06 ~ Feb,03,09	X		20	
	GP-020831-01		Feb,03,09 ~	△			
C-1-6	02009SC-A001	Side Cover Screw				20	

C

C-2

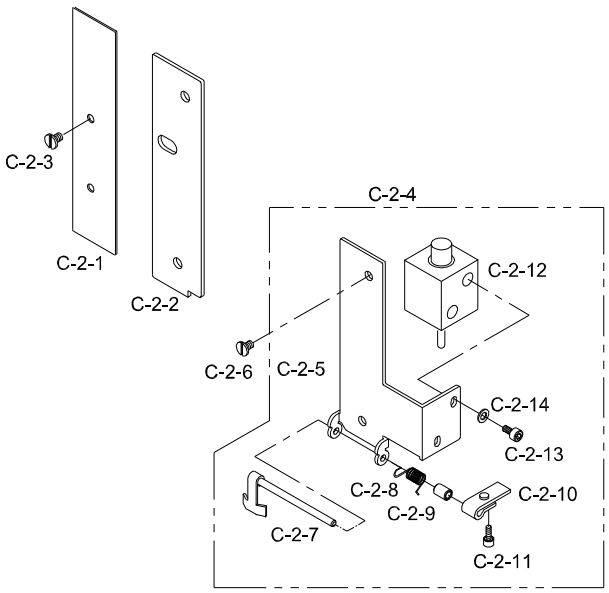

Note

Ref.No	Part No.	Part Name	Applied Period	Interchangeability	Hardware	Q'ty	Remark
C-2-1	GP-013758-00	Arm Guard Plate (L)	Dec,14,05 ~	X		20	
C-2-2	GP-007325-00	Arm Guard Plate (R)	Jan,26,05 ~	X		20	
C-2-3	03065SC-A001	Guard Plate Screw				80	
C-2-4	AS-000858-00	Upper Thread Holding Set	Aug,16,04 ~	X		20	
C-2-5	03303800I000	Arm Guard Plate(R)				20	
C-2-6	03065SC-A001	Guard Plate Screw				20	
C-2-7	03304100I000	Thread Holding Lever Ass'y				20	
C-2-8	03304200I000	Lever Spring				20	
C-2-9	03304300I000	Lever Spring Bush.				20	
C-2-10	03304400I000	Thread Holding Push Plate				20	
C-2-11	07035SC-7113	Hex.Scoket Bolt (M3*L6)			O	20	
C-2-12	10009EL-A002	UPPER THREAD CATCHER SOL.				20	
C-2-13	05007SC-7113	Hex.Scoket Bolt (M3*L5)			O	40	
C-2-14	06011SW-2111	Washer (@3)			O	40	

C

C-3

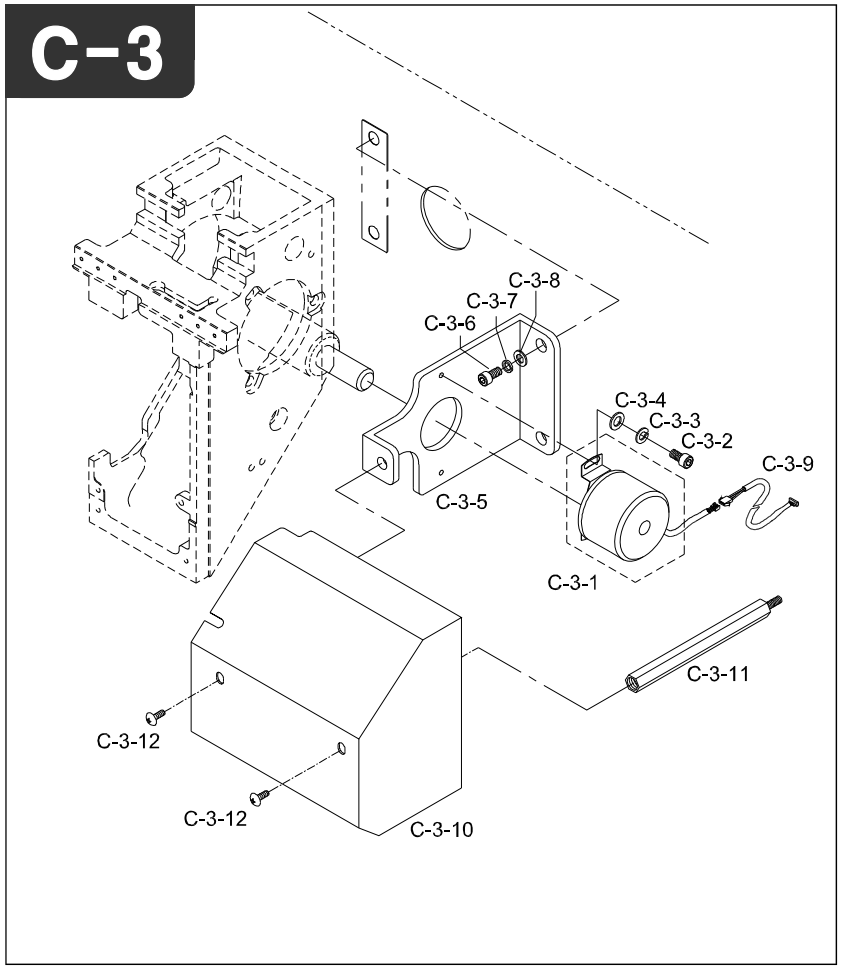

Note

Ref.No	Part No.	Part Name	Applied Period	Interchangeability	Hardware	Q'ty	Remark
C-3-1	03013EL-T121	Encoder Set				1	
C-3-2	07035SC-7113	Bracket Screw (M3*L6)			O	2	
C-3-3	08011SW-1111	Spring Washer (@3-S)			O	2	
C-3-4	06011SW-2111	Washer (@3)			O	2	
C-3-5	GP-008536-00	Encoder Base	Apr,08,05 ~	X		1	
C-3-6	08076SC-7113	Hex. Socket Bolt (M5*L12)			O	4	
C-3-7	18048SW-3115	Spring Washer (@5)			O	2	
C-3-8	16018SW-1111	Washer (@5)			O	2	
C-3-9	25105ET-B001	Encoder Connector				1	
C-3-10	GP-003620-00	Oil Tank Cover	Aug,18,04 ~ Apr,06,05	X		1	
	GP-003620-01		Apr,06,05 ~ Dec,19,06	△			
	GP-003620-02		Dec,19,06 ~ Jan,14,08	△			
	GP-003620-03		Jan,14,08 ~	△			
C-3-11	18036CW-UK06	Oil Tank Cover Support				1	
C-3-12	02044SC-3123	Truss Screw (M5*L8)			O	2	

C

C-4

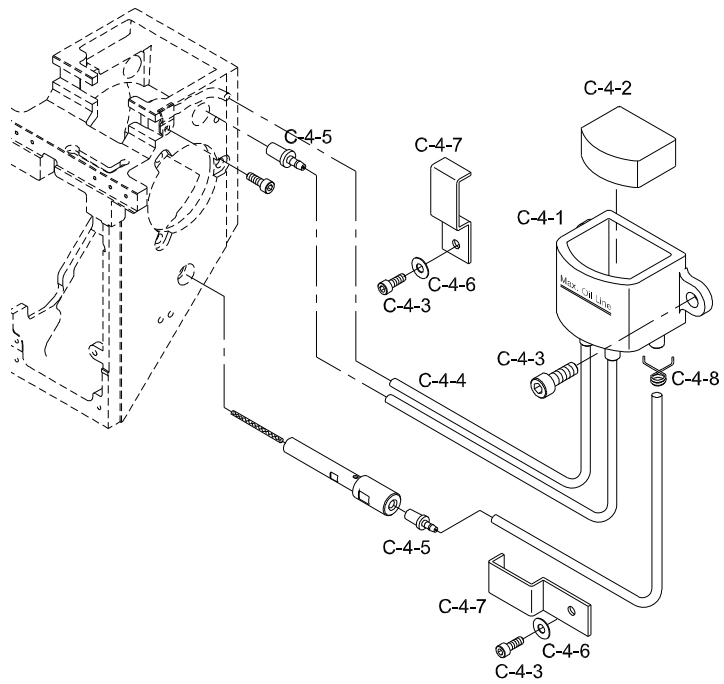

Note

Ref.No	Part No.	Part Name	Applied Period	Interchangeability	Hardware	Q'ty	Remark
C-4-1	GP-009589-00	Oil Tank Ass'Y	May,18,05 ~	X		4	
C-4-2	GP-009590-00	Oil Tank Felt	May,18,05 ~	X		4	
C-4-3	02023SC-7113	Hex. Socket Bolt (M4*L8)			O	16	
C-4-4	18045ET-UK01	Oil Hose L=160				16	
C-4-5	03000500U000	Oil Tube Pin				12	
C-4-6	18015SW-3111	WASHER (4@)			O	8	
C-4-7	18033PR-UK01	OIL TUBE GUIDE				8	
C-4-8	32046SP-T121	HOLDER FOR OIL HOSE				12	

C

C-5

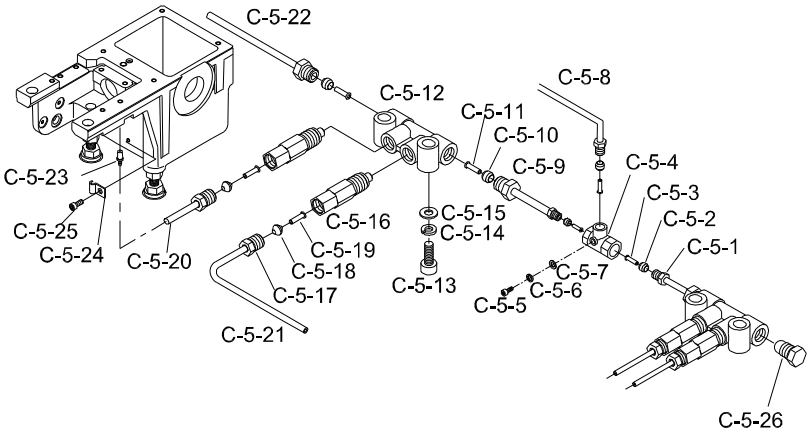

Note

Ref.No	Part No.	Part Name	Applied Period	Interchangeability	Hardware	Q'ty	Remark
C-5-1	01300300H000	Oil Pump Hose Insert				4	
C-5-2	01300400H000	Oil Pump Compression Sleeve				4	
C-5-3	01300500H000	Oil Pump Compression Bushing				4	
C-5-4	01303900H000	Distribution Junction				2	
C-5-5	16028SC-7113	Hex. Socket Bolt (M5*L25)			O	2	
C-5-6	18048SW-3115	Spring Washer (@5)			O	2	
C-5-7	16018SW-1111	Washer (@5)			O	2	
C-5-8	01303800H000	Oil Hose @4				4	
C-5-9	01300300H000	Oil Pump Hose Insert				6	
C-5-10	01300400H000	Oil Pump Compression Sleeve				6	
C-5-11	01300500H000	Oil Pump Compression Bushing				6	
C-5-12	01302700U000	Mos Metering Valve Junction				10	
C-5-13	16028SC-7113	Hex. Socket Bolt (M5*L25)			O	20	
C-5-14	18048SW-3115	Spring Washer (@5)			O	20	
C-5-15	16018SW-1111	Washer (@5)			O	20	
C-5-16	01300900H000	Mos Metering Valve				40	
C-5-17	01300300H000	Bed Oil Hose Insert				20	
C-5-18	01300400H000	Bed Oil Compression Sleeve				20	
C-5-19	01300500H000	Bed Oil Compression Bushing				20	
C-5-20	01301100H000	Bed Oil Supply Hose "A"				10	
C-5-21	01301200H000	Bed Oil Supply Hose "B"				10	
C-5-22	01301000H000	Valve Junction Connect Hose				8	
C-5-23	01301600H000	Oil Supply Nipple				80	
C-5-24	01301500H000	Bed Oil Supply Hose Holder				20	
C-5-25	22006SC-7113	Hex. Socket Bolt (M3*L8)			O	20	

C

C-6

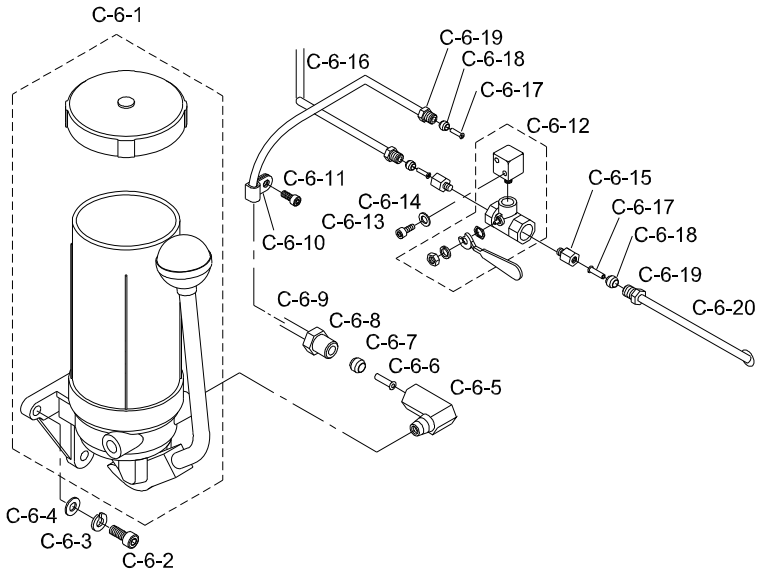

Note

Ref.No	Part No.	Part Name	Applied Period	Interchangeability	Hardware	Q'ty	Remark
C-6-1	01300100H000	Oil Pump Set				1	
C-6-2	14046SC-7113	Hex.Socket Bolt (M6*L30)			O	3	
C-6-3	03026SW-9115	Spring Washer (@6)			O	3	
C-6-4	03025SW-1211	Washer (@6)			O	3	
C-6-5	01300200H000	Oil Pump Adapter				1	
C-6-6	01300300H000	Oil Pump Hose Insert				2	
C-6-7	01300400H000	Oil Pump Compression Sleeve				2	
C-6-8	01300500H000	Oil Pump Compression Bushing				2	
C-6-9	01300600H000	Oil Pump Hose (@4)			O	1	
C-6-10	15046ET-T121	Wire Holder				2	
C-6-11	02023SC-7113	Hex. Socket Bolt (M4*L8)			O	2	
C-6-12	01302210H000	Stop Valve (1/8)				1	
C-6-13	05014SC-7113	Hex. Socket Bolt (M4*L25)			O	2	
C-6-14	18015SW-3111	Washer (4@)			O	2	
C-6-15	01302600H000	Stop Valve Adapter				1	
C-6-16	01302400H000	Stop Valve Adapter Hose (@4)			O	1	
C-6-17	01300300H000	Oil Pump Hose Insert				1	
C-6-18	01300400H000	Oil Pump Compression Sleeve				1	
C-6-19	01300500H000	Oil Pump Compression Bushing				1	
C-6-20	01302400H000	Stop Valve Adapter Hose (@4)				1	

C

Thread Cutting Set

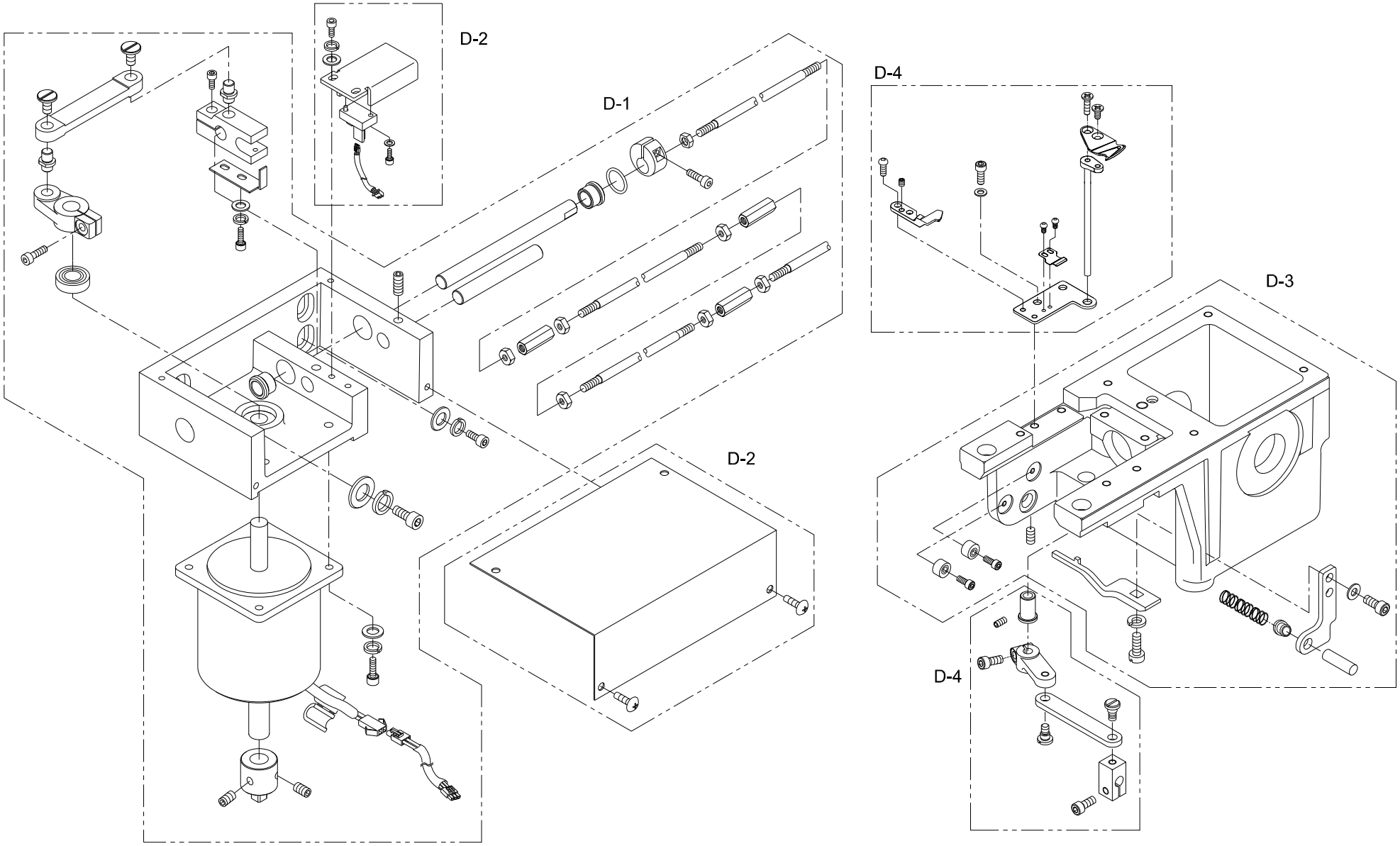

D-1

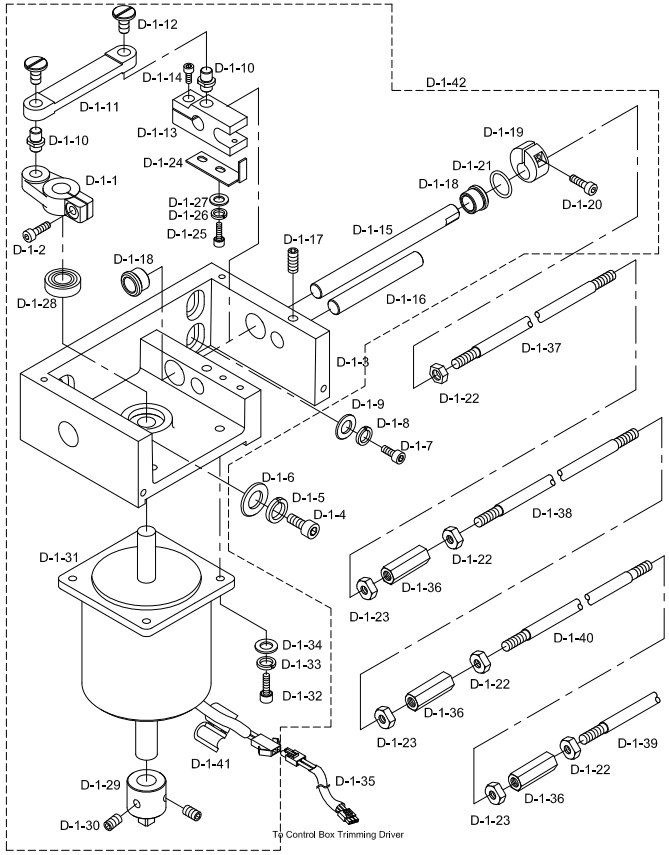

Note

Ref.No	Part No.	Part Name	Applied Period	Interchangeability	Hardware	Q'ty	Remark
D-1-1	04001100BT00	MES DRIVING CRANK				1	
D-1-2	14002SC-7113	Hex.Socket Bolt (M6*L15)			O	1	
D-1-3	GP-015257-00	MES CAM DRIVING BOX	Feb,15,06 ~	X		1	
D-1-4	14003SC-4113	Hex. Socket Bolt (M8*L25)			O	1	
D-1-5	15095SW-3115	Spring Washer (@8)			O	1	
D-1-6	04029SW-A001	Stud Bolt Washer (@8)			O	1	
D-1-7	06025MC-7113	Hex. Socket Bolt (M6*L25)			O	2	
D-1-8	03026SW-9115	Spring Washer (@6)			O	2	
D-1-9	03025SW-1211	Washer (@6)			O	2	
D-1-10	PN-000726-00	Mes Link Pin	Jan,13,09 ~	X		2	
D-1-11	03700400H000	Mes Driving Link				1	
D-1-12	03700500H000	Mes Driving Link Screw				2	
D-1-13	03700600H000	Mes Shaft Driving Clamp				1	
D-1-14	08062SC-7113	Hex. Socket Bolt (M5*L20)			O	1	
D-1-15	03700700H000	Mes Driving Shaft (@10*L121)			O	1	
D-1-16	03700800H000	Mes Driving Shaft Guide				1	
D-1-17	14060AF-4517	Hex.Socket Screw(M6*L6)			O	1	
D-1-18	03701100H000	Mes Driving Shaft Bush				2	
D-1-19	08065CW-A001	Stopper Collar				1	
D-1-20	18047SC-7113	Hex. Socket Bolt (M5*L15)			O	1	
D-1-21	08067RB-A001	O-Ring (@10)			O	1	
D-1-22	13042SN-1111	Hex. Nut (M6*T5-R)			O	4	
D-1-23	17053SN-1111	Hex. Nut (M6*T5-L)			O	3	
D-1-24	GP-015265-00	Limit Sensor Plate	Feb,15,06 ~ May,12,06	X		1	
	GP-015265-01		May,12,06 ~	△			
D-1-25	07035SC-7113	BRACKET SCREW (M3*L6)			O	2	
D-1-26	11019SW-9115	Spring Washer (@3)			O	2	
D-1-27	06011SW-2111	Washer (@3)			O	2	
D-1-28	03701000H000	Ball Bearing (6001Z)			O	1	
D-1-29	03701200BT00	MOTOR DRIVING NOB				1	
D-1-30	14060AF-4517	Hex.Socket Screw(M6*L6)			O	2	
D-1-31	16055MT-UK06	PULSE MOTOR (103H8223-5114) (100 under)				1	
	16059MT-E131	Y MOTOR (103H8222-5212) (120 over)					
D-1-32	18047SC-7113	Hex. Socket Bolt (M5*L15)			O	4	
D-1-33	18048SW-3115	SPRING WASHER (5@)			O	4	
D-1-34	18049SW-3111	WASHER (@5)			O	4	

D

D-1

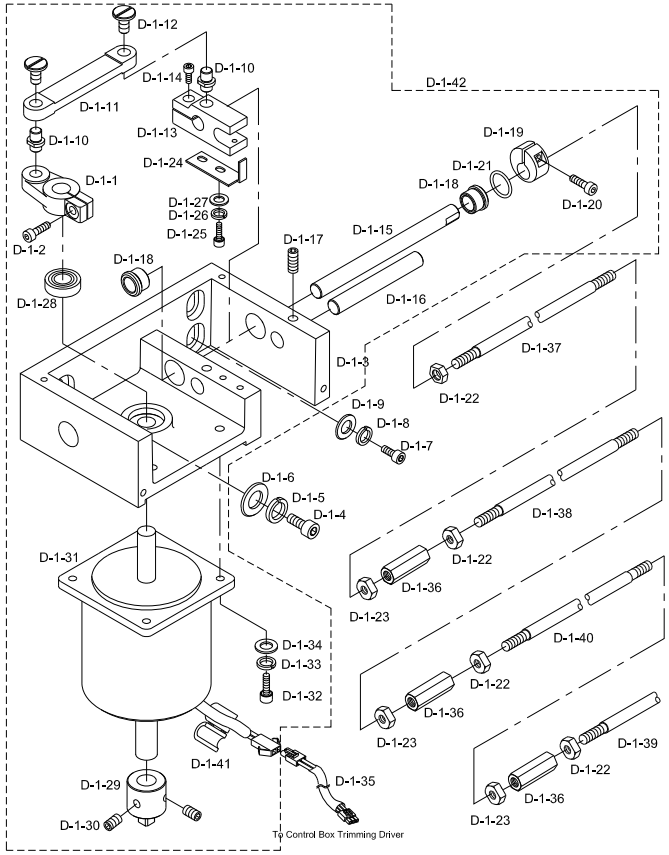

Note

Ref.No	Part No.	Part Name	Applied Period	Interchangeability	Hardware	Q'ty	Remark
D-1-35	CA-000334-00	STEP MOTOR DRIVE POWER	Jul,16,05 ~ Nov,17,05	X		1	
	CA-000334-01		Nov,17,05 ~ Feb,14,09	△			
	CA-000334-02		Feb,14,09 ~	△			
D-1-36	17051SN-A001	Mes Driving Shaft Joint				3	
D-1-37	17032SH-AC01	Mes Driving Shaft "A"				1	
D-1-38	17032SH-AC01	Mes Driving Shaft "B"				1	
D-1-39	17029SH-AF01	Mes Driving Shaft "C"				1	
D-1-40	04000200HHI0	Mes Driving Shaft "D"				1	
D-1-41	15045EL-UK01	Bid(Large)				1	
D-1-42	AS-004111-00	MES CAM DRIVING BOX Assy	Feb,17,06~	X		Z	

D

D-2

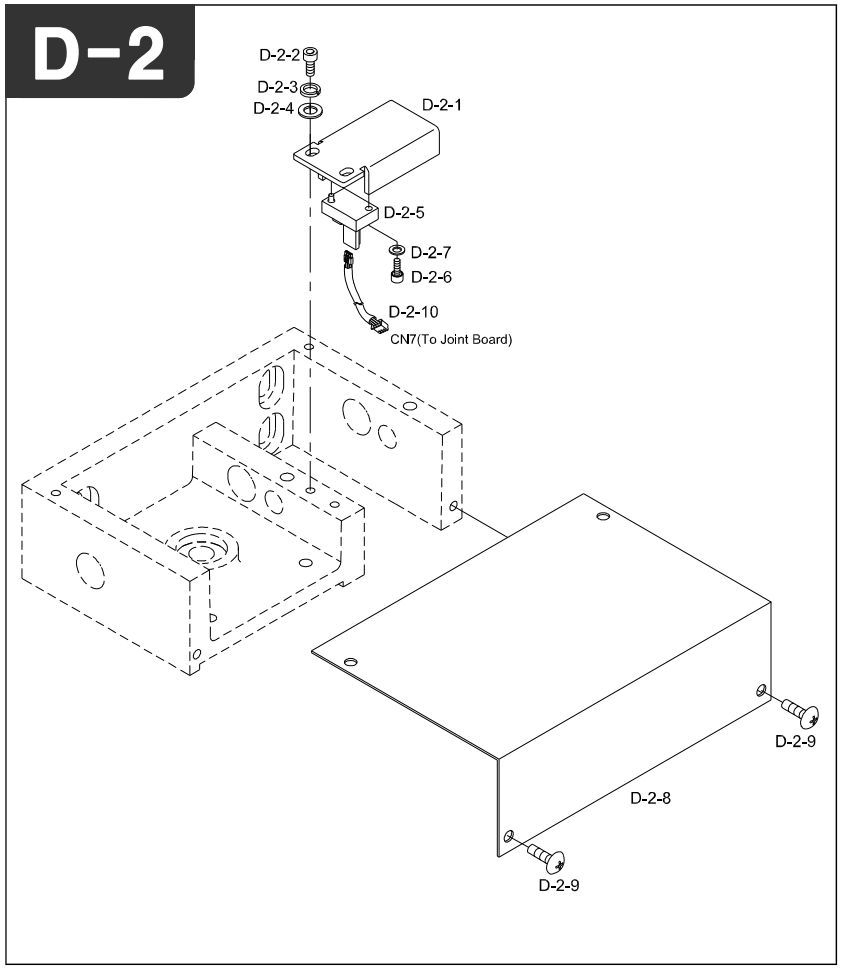

Note

Ref.No	Part No.	Part Name	Applied Period	Interchangeability	Hardware	Q'ty	Remark
D-2-1	GP-015264-00	Limit Sensor Base	Feb,15,06 ~ Apr,26,06	X		1	
	GP-015264-01		Apr,26,06 ~	△			
D-2-2	02015SC-7113	Hex. Socket Bolt (M4*L10)			O	2	
D-2-3	18048SW-3115	SPRING WASHER (5@)			O	2	
D-2-4	18049SW-3111	WASHER (@5)			O	2	
D-2-5	BD-00396-01	Xy-Sensor Ass'Y (Tlp1204)				2	
D-2-6	09007SC-7113	Hex. Socket Bolt (M3*L12)			O	4	
D-2-7	06011SW-2111	Washer (@3)			O	4	
D-2-8	04001000H000	Mes Driving Box Cover				1	
D-2-9	15042SC-3123	TRUSS SCREW (M4*L6)			O	6	
D-2-10	CO-27-01	CAM FROM RETURN SENSOR				1	

D

D-3

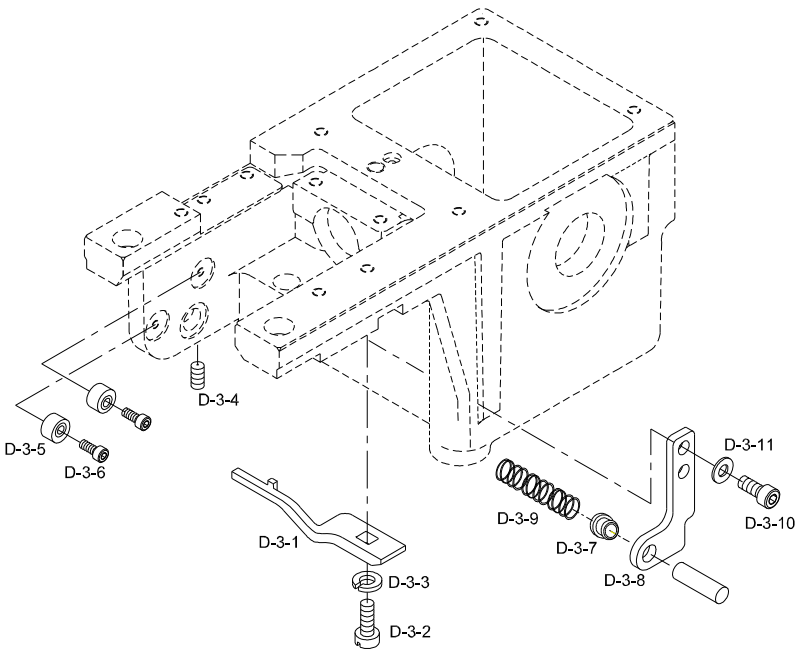

Note

Ref.No	Part No.	Part Name	Applied Period	Interchangeability	Hardware	Q'ty	Remark
D-3-1	GP-010609-00	Rotary Hook Support	Jul,13,05 ~	X		18	
D-3-2	04037SC-A001	Picker Bracket Screw (11/64-40)			O	18	
D-3-3	18048SW-3115	Spring Washer (@5)			O	18	
D-3-4	08113SC-A001	Collar Screw (11/64, L6)			O	18	
D-3-5	10017RB-A001	Picker Stopper				36	
D-3-6	03071SC-7113	Hex. Socket Bolt (M3*L10)			O	36	
D-3-7	05031AF-A001	Mes Shaft Bracket Bush				18	
D-3-8	04002200H000	Mes Shaft Bracket				18	
D-3-9	08049SP-A001	Lever Return Spring				2	
D-3-10	02023SC-7113	Hex. Socket Bolt (M4*L8)			O	36	
D-3-11	06003SW-2111	Washer (@4)			O	36	

D

D-4

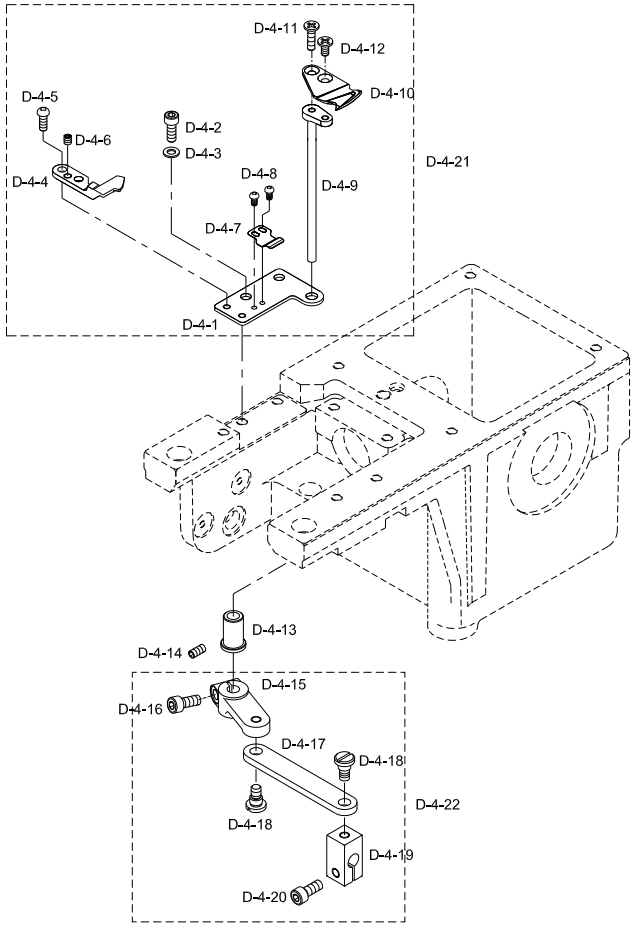

Note

Ref.No	Part No.	Part Name	Applied Period	Interchangeability	Hardware	Q'ty	Remark
D-4-1	GP-038684-00	MES MOUNTING BASE	May,28,08 ~	X		20	
D-4-2	03057SC-A001	Head Rail Holder Screw (11/64,L10)			O	40	
D-4-3	06003SW-2111	Washer (@4)			O	40	
D-4-4	04400200B000	FIXED MES				20	
D-4-5	08098SC-8118	Plus Screw (M3*L4.5)			O	20	
D-4-6	03050SC-4517	Hex. Socket Set Screw (M3*L3)			O	40	
D-4-7	04400310B000	UNDER THREAD PRESSER				20	
D-4-8	02003MC-8118	UNDER THREAD PRESSER SCREW				40	
D-4-9	08014FU-B001	Movable Mes Shaft (New)			O	20	
D-4-10	08013CL-B001	Movable Mes			O	20	
D-4-11	08014SC-A001	Plus Screw (M3*L8)			O	20	
D-4-12	08017SC-B001	Screw (M3*L5)			O	20	
D-4-13	01101800B000	Mes Adjusting Bushing				20	
D-4-14	08113SC-A001	Collar Screw (11/64, L6)			O	20	
D-4-15	08110FH-B001	Mes Driving Crank				20	
D-4-16	02015SC-7113	Hex. Socket Bolt (M4*L10)			O	20	
D-4-17	08025PR-B001	Mes Connecting Lever				20	
D-4-18	08022SC-A001	Lever Stud				44	
D-4-19	08023CW-A001	Mes Shaft Cramp				20	
D-4-20	02015SC-7113	Hex. Socket Bolt (M4*L10)			O	20	
D-4-21	AS-008634-00	MES MOUNTING BASE Assy				20	
D-4-22	0120000B000	Mes Driving Crank Assy				20	

D

Main Drive System

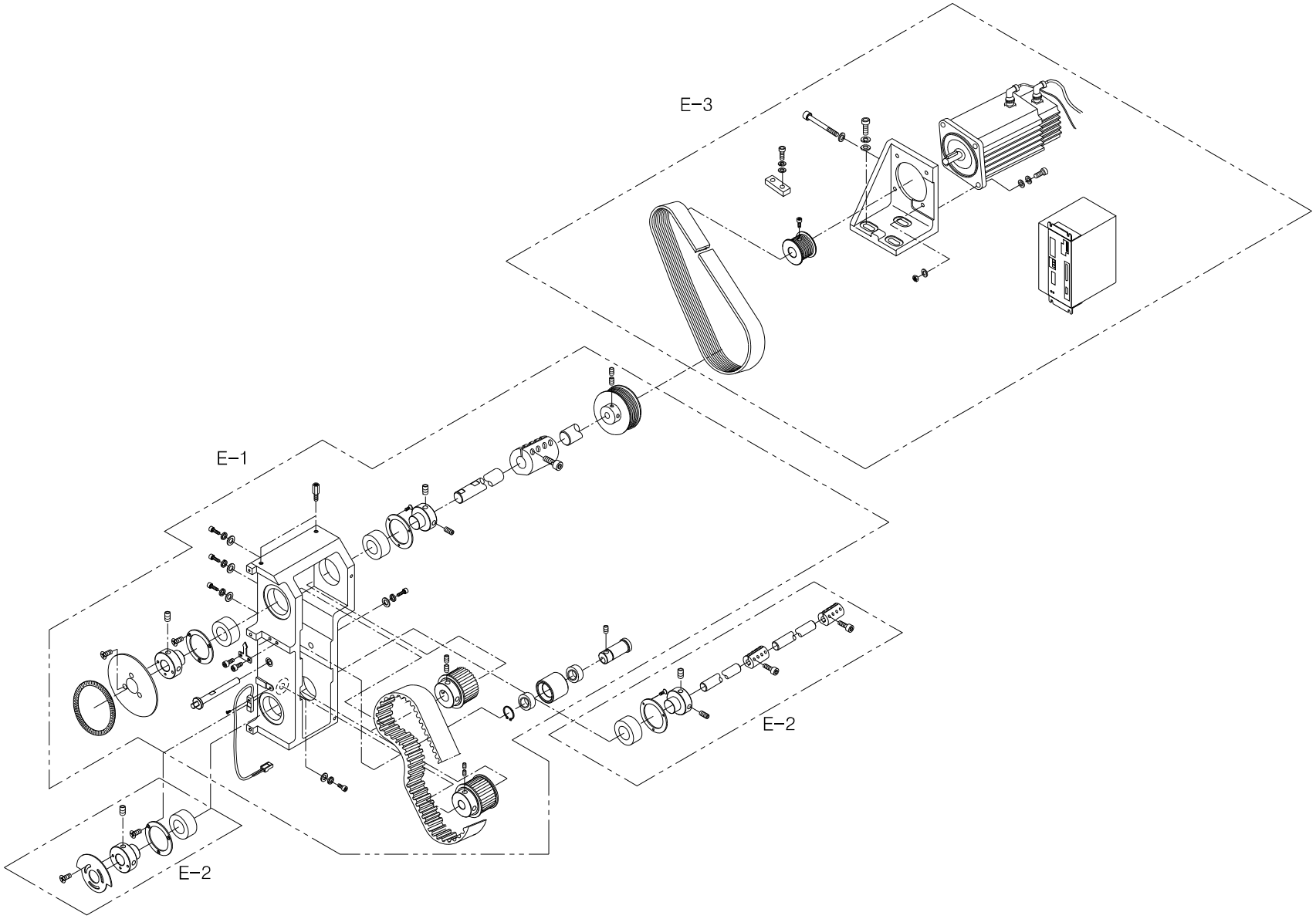

E-1

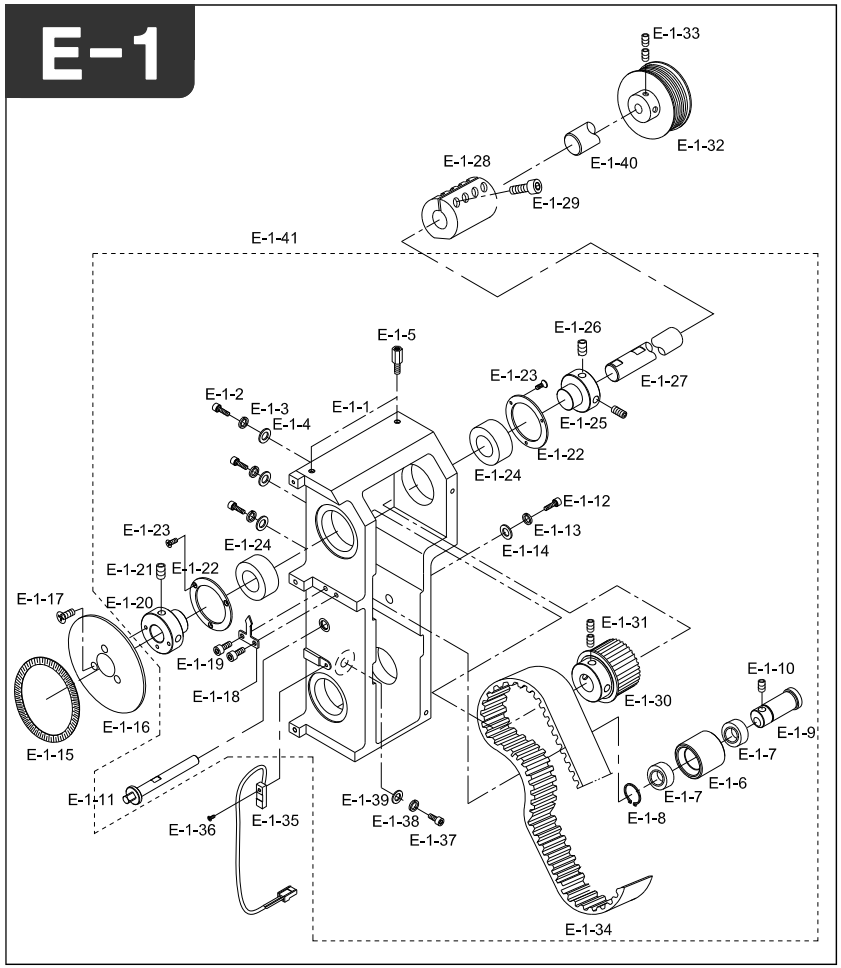

Note

Ref.No	Part No.	Part Name	Applied Period	Interchangeability	Hardware	Q'ty	Remark
E-1-1	GP-020802-00	MAIN DRIVING PULLEY BOX	Aug,23,06 ~ Sep,13,06	X		1	
	GP-020802-01		Sep,13,06 ~ Mar,12,08	△			
	GP-020802-02		Mar,12,08 ~ May,15,08	△			
	GP-020802-03		May,15,08 ~	△			
E-1-2	03003SC-4113	Pulley Box Screw [M8×L35]			O	3	
E-1-3	15095SW-3115	Pulley Box Spring Washer [Ø8]			O	3	
E-1-4	04029SW-A001	Pulley Box Washer [Ø8]			O	3	
E-1-5	GP-010263-00	Pulley Box Cover Stud	Jun,28,05 ~	X		2	
E-1-6	03200300I000	Tension Adjusting Roller				1	
E-1-7	03200400I000	ROLLER BEARING				2	
E-1-8	03200700I000	C-Ring (#20)			O	1	
E-1-9	03200600I000	Idler Bush				1	
E-1-10	04004MC-4517	Hex,Socket Bolt (M4×L4)			O	1	
E-1-11	03200500I000	Idler Shaft				1	
E-1-12	14006SC-7113	Hex,Socket Bolt (M8×L10)			O	1	
E-1-13	04029SW-A001	Washer (Ø8)			O	1	
E-1-14	15095SW-3115	Spring Washer (Ø8)			O	1	
E-1-15	03005600H000	ANGLE DISK				1	
E-1-16	03005710H000	Angle Plate Base @20				1	
E-1-17	21002SC-8119	Plus Screw (M3-L8)			O	3	
E-1-18	03005800H000	Indicator				1	
E-1-19	02023SC-7113	Hex.Socket Bolt (M4*L8)			O	2	
E-1-20	03201100I000	Collar "B" @20				1	
E-1-21	14060AF-4517	Hex.Socket Screw(M6*L6)			O	2	
E-1-22	12101000I000	Bearing Cover (A)				2	
E-1-23	08006SC-8118	Hex.Socket Screw (M3xL5)			O	6	
E-1-24	01001100H000	Ball Bearing (6005Zz)			O	4	
E-1-25	03005210H000	Collar "A"				1	
E-1-26	14060AF-4517	Hex.Socket Screw(M6*L6)			O	4	
E-1-27	GP-006655-00	Top Shaft "A" [190mm]	Dec,29,04 ~	X		1	
E-1-28	03006720HDK0	COUPLING @20				4	
E-1-29	08091SC-7113	Hex,Socket Bolt (M6×L20)			O	16	
E-1-30	03200900I000	Pulley for Upper Shaft Ass'y				1	
E-1-31	14061AF-4517	Hex.Socket Screw(M8*L8)			O	4	
E-1-32	03100410H000	Top Shaft Drive Pulley				1	
E-1-33	03016SC-4113	Hex.Socket Screw(M5*L15)			O	4	
E-1-34	03200800I000	Timing Belt (B300 S5M 625)				1	

E

E-1

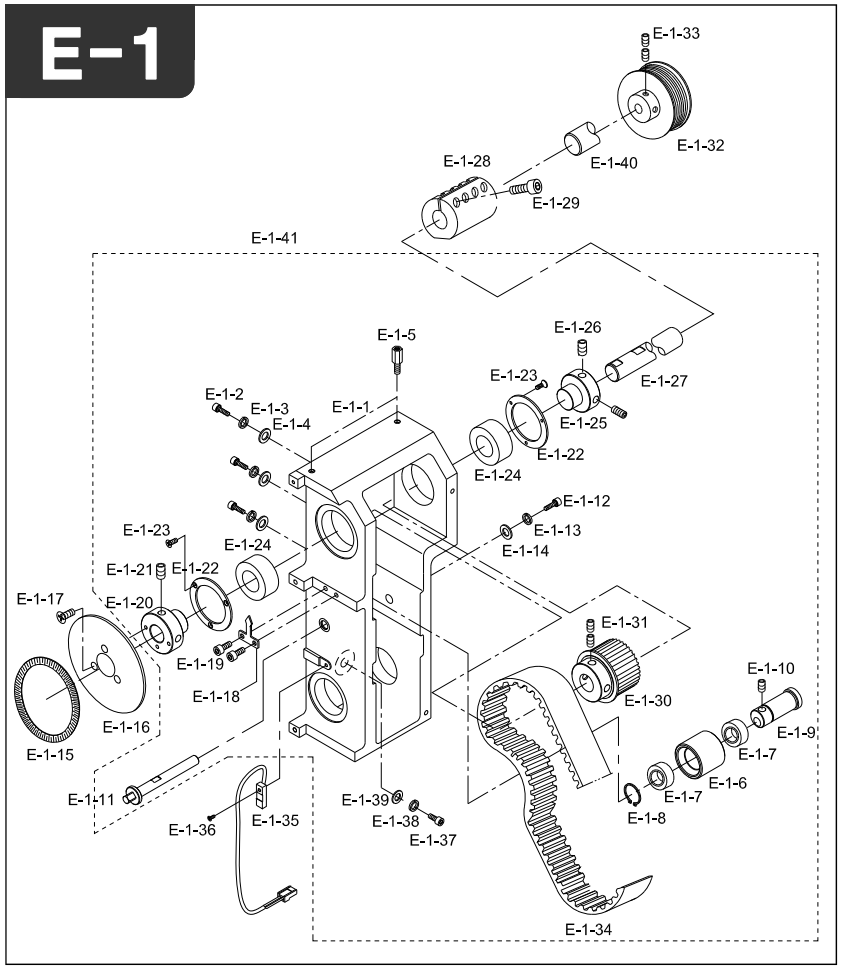

Note

Ref.No	Part No.	Part Name	Applied Period	Interchangeability	Hardware	Q'ty	Remark
E-1-35	EP-000067-00	SENSOR	Dec,05,05 ~	X		2	
E-1-36	27076SC-8119	Hex.Socket Bolt (M3*L12)			O	2	
E-1-37	08091SC-7113	Hex,Socket Bolt (M8×L10)			O	1	
E-1-38	16014SW-4115	Spring Washer (Ø8)			O	1	
E-1-39	03025SW-1211	Washer (Ø8)			O	1	
E-1-40	03006400IDK0	Top Shaft "B" [1493.5mm]				1	
	03006520HDK0	Top Shaft "C" [855mm]				1	
	03006610HDK0	Top Shaft "D"[970mm]				1	
	03007410HDK0	Top Shaft "E" [1400mm]				1	
E-1-41	AS-004493-00	MAIN DRIVING PULLEY BOX Assy	Apr,18,06 ~	X		1	

E

E-2

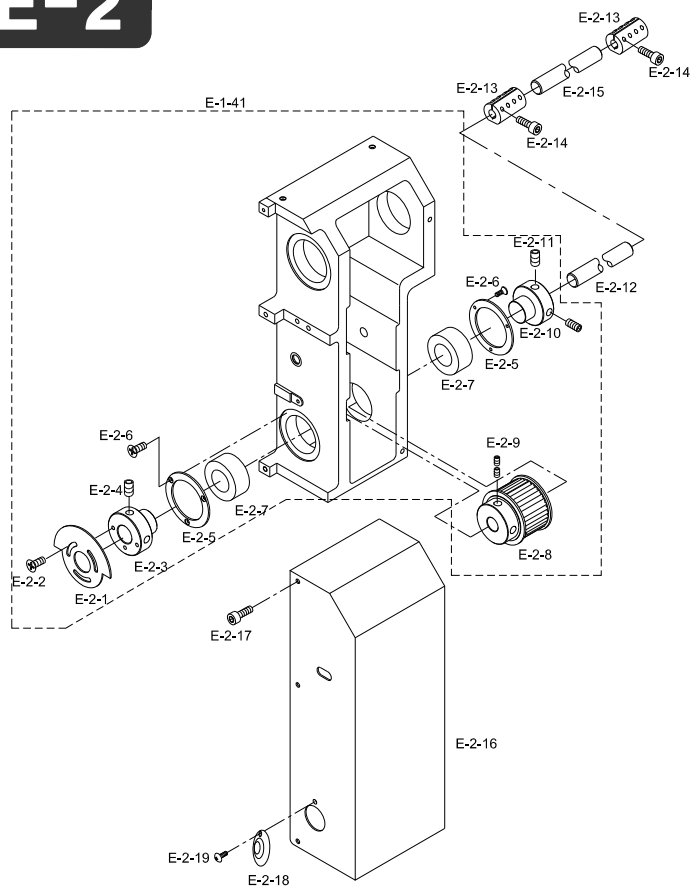

Note

Ref.No	Part No.	Part Name	Applied Period	Interchangeability	Hardware	Q'ty	Remark
E-2-1	03000200I000	Oil Supply Sensor Plate				1	
E-2-2	08006SC-8118	Hex.Socket Bolt (M3*L5)			O	3	
E-2-3	03000100I000	Oil Supply Sensor Stopper Collar				1	
E-2-4	14060AF-4517	Hex.Socket Bolt (M6*L6)			O	2	
E-2-5	12101100I000	Bearing Cover (B)				2	
E-2-6	08006SC-8118	Hex.Socket Screw(M3xL5)			O	6	
E-2-7	01029BR-A001	Ball Bearing(6004ZZ)			O	2	
E-2-8	03200200I000	Pulley For Low Shaft				1	
E-2-9	14061AF-4517	Hex.Socket Screw(M8*L8)			O	4	
E-2-10	14058CW-A001	Collar "A"				4	
E-2-11	14060AF-4517	Hex.Socket Screw(M6*L6)			O	8	
E-2-12	03000400I000	Low Shaft "A"[225mm]				1	
E-2-13	03007500H000	Low Coupling				3	
E-2-14	27033SC-7113	Hex,Socket Bolt (M5xL20)			O	12	
E-2-15	03000210BDK0	Low Shaft "B" [2053mm]				1	
	17006SH-A001	Low Shaft "C"[1808mm]				1	
	03006910HDK0	Low Shaft "D" [2308mm]				1	
E-2-16	GP-010262-00	Pulley Bracket Cover	Jun,28,05 ~	X		1	
E-2-17	02023SC-7113	Hex.Socket Screw (M4xL8)			O	6	
E-2-18	02054PR-A001	Main Motor Pulley Cover				1	
E-2-19	02044SC-3123	Truss Screw(M5 x L8)			O	1	

E

E-3

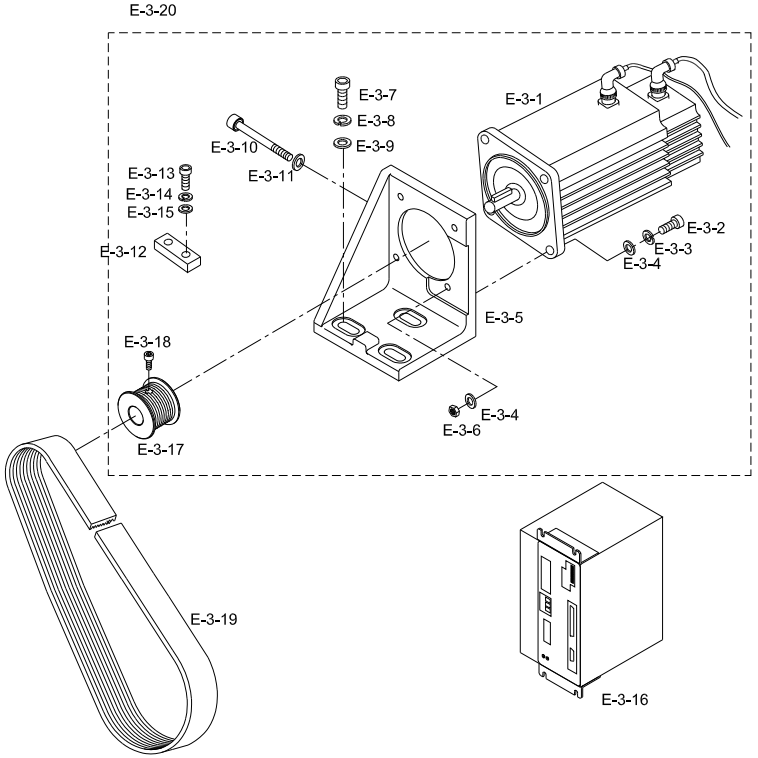

Note

Ref.No	Part No.	Part Name	Applied Period	Interchangeability	Hardware	Q'ty	Remark
E-3-1	DMPE1-000001	Main Motor (SFAM-1000-001)				1	
E-3-2	15019SC-4113	Hex. Socket Bolt (M8*L40)			O	4	
E-3-3	15095SW-3115	Spring Washer (@8)			O	8	
E-3-4	04029SW-A001	Stud Bolt Washer(S) (@8)			O	4	
E-3-5	GP-006642-00	Main Motor Bracket	Dec,29,04 ~	X		1	
E-3-6	04032SN-A001	Hex. Nut (M8-NO2)			O	4	
E-3-7	14027SC-4113	Hex.Socket Bolt (M8*L30)			O	5	
E-3-8	15095SW-3115	Spring Washer (@8)			O	5	
E-3-9	04029SW-A001	Stud Bolt Washer(S) (@8)			O	5	
E-3-10	08080MC-4113	HEX.SOCKET BOLT (M8*L80)			O	1	
E-3-11	04029SW-A001	Stud Bolt Washer(S) (@8)			O	1	
E-3-12	03100600H000	Main Motor Guide				2	
E-3-13	05008SC-4113	Hex.Socket Bolt (M4*L16)			O	4	
E-3-14	18014SW-3115	Spring Washer (@4-No2)			O	4	
E-3-15	18015SW-3111	Washer (4@)			O	4	
E-3-16	24031AF-B001	Motor Driver [SANYO : PY2A050AF]				1	
E-3-17	03100410H000	Main Motor Pulley				1	
E-3-18	03016SC-4113	Hex. Socket Bolt (M5*L15)			O	3	
E-3-19	BE-000027-00	Top Shaft Drive Belt	Dec,29,04 ~	X		1	
E-3-20	AS-008191-00	Main Motor Assy	Feb,04,08 ~	X		1	

E

Head & Color Change

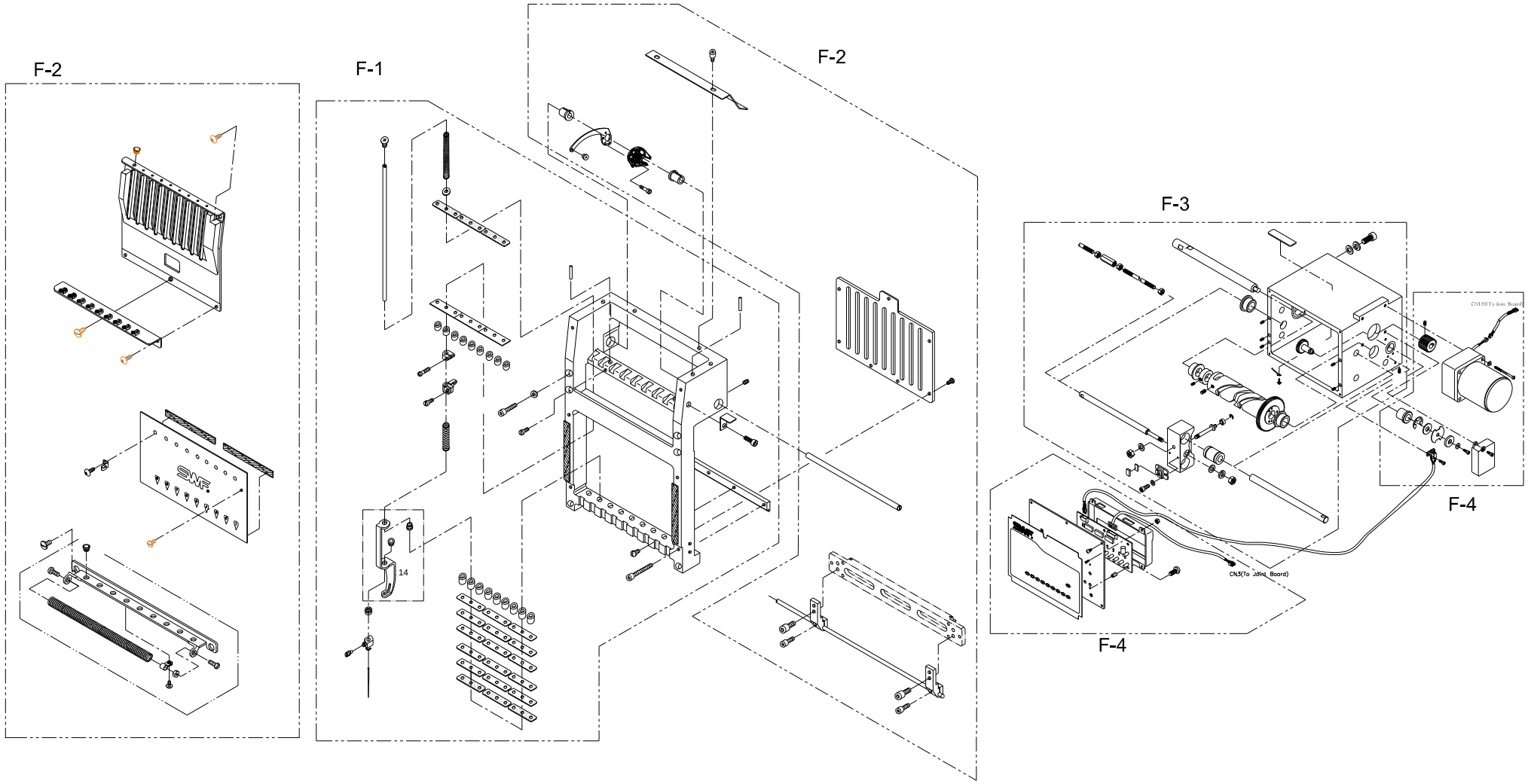

F-1

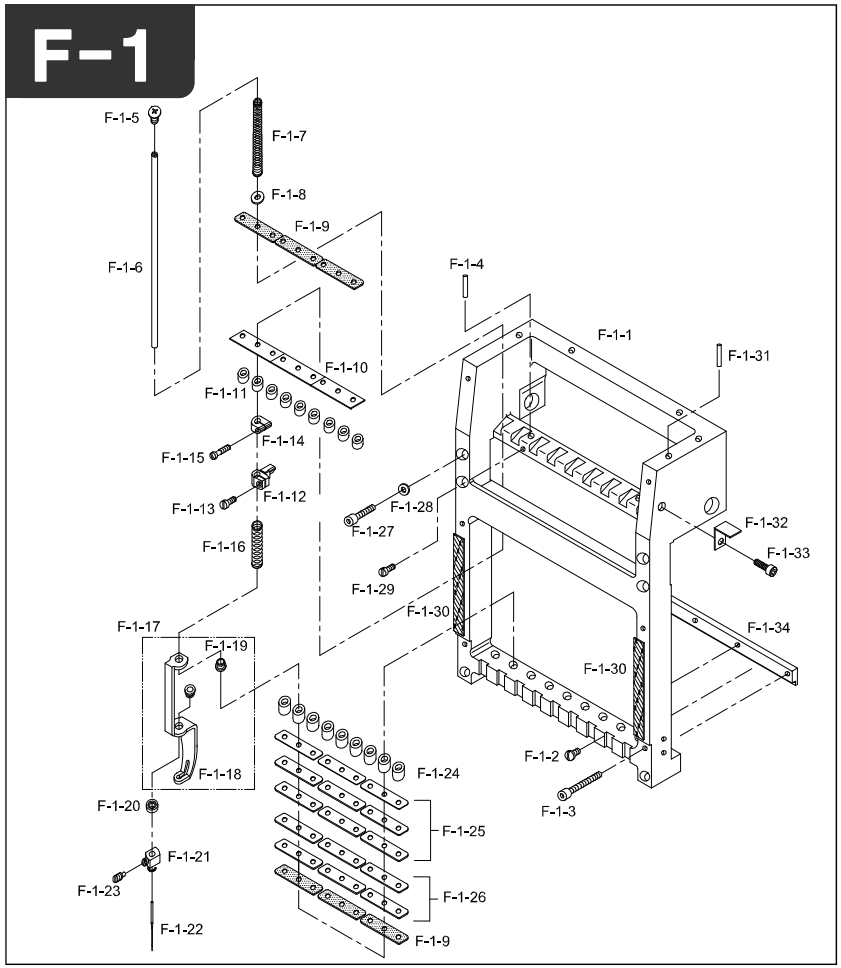

Note

Ref.No	Part No.	Part Name	Applied Period	Interchangeability	Hardware	Q'ty	Remark
F-1-1	GP-011947-00	Head	Aug,14,05 ~ Nov,14,06	X		20	
	GP-011947-01		Nov,14,06 ~ Mar,26,07	△			
	GP-011947-02		Mar,26,07 ~ Nov,02,07	△			
	GP-011947-03		Nov,02,07 ~ Sep,11,08	△			
	GP-011947-04		Sep,11,08 ~ Nov,03,08	△			
	GP-011947-05		Nov,03,08 ~	△			
F-1-2	SC-000417-00	Head Rail Screw	Sep,14,05 ~	X		60	
F-1-3	05014SC-7113	Hex. Socket Bolt (M4*L25)			O	40	
F-1-4	05015CW-A001	Head Base Pin(@5*L15)			O	20	
F-1-5	05019SC-A001	Needle Bar Cover Screw (M5*L6)			O	180	
F-1-6	GP-011929-00	Needle Bar	Sep,14,05 ~	X		180	
F-1-7	GP-007216-00	Needle Bar Return Spring	Jan,21,05 ~ Sep,02,05	X		180	
	GP-007216-01		Sep,02,05 ~	△			
F-1-8	05022SW-A001	Spring Shoe Washer				180	
F-1-9	05021SF-A001	Felt				120	
F-1-10	05023RB-A001	Needle Bar Cushion Rubber "A"				60	
F-1-11	05024RB-A001	Needle Bar Cushion Rubber "B"				180	
F-1-12	GP-044776-00	Needle Bar Holder	Jan,13,09 ~	X		180	
F-1-13	05028SC-4113	Holder Screw (9/64-L8)				180	
F-1-14	11101200T000	Upper Dead Point Stopper				180	
F-1-15	05026SC-4113	Stopper Screw (9/64-11.5)				180	
F-1-16	GP-020915-00	Presser Foot Pressure Spring	Aug,26,06 ~ May,03,07	X		180	
	GP-020915-01		May,03,07 ~	△			
F-1-17	05029BM-A001	Presser Foot Set				180	
F-1-18	GP-013763-00	Presser Foot	Dec,14,05 ~	X		180	
F-1-19	05031AF-A001	Presser Foot Guide Bush				360	
F-1-20	05035RB-A001	Presser Foot Cushion Rubber"A				180	
F-1-21	05036AF-A001	Needle Fixed Holder				180	
F-1-22	05037DB-A001	Needle (Db-K5, #11)			O	180	
F-1-23	05363SC-A001	Needle Fixed Screw (A/S)				180	
F-1-24	05032RB-A001	Presser Foot Cushion Rubber"B				180	
F-1-25	05033RB-A001	Presser Foot Adjusting Rubber				180	
F-1-26	05034RB-A001	Presser Foot Adjusting Rubber				120	
F-1-27	05008SC-4113	Hex.Socket Bolt (M4*L16)			O	40	
F-1-28	06003SW-2111	Washer (@4)			O	80	
F-1-29	03022SC-4517	Hex. Socket Set Screw(M4*L5)			O	20	
F-1-30	05063RB-A001	Magnetic Rubber "A"				40	

F

F-1

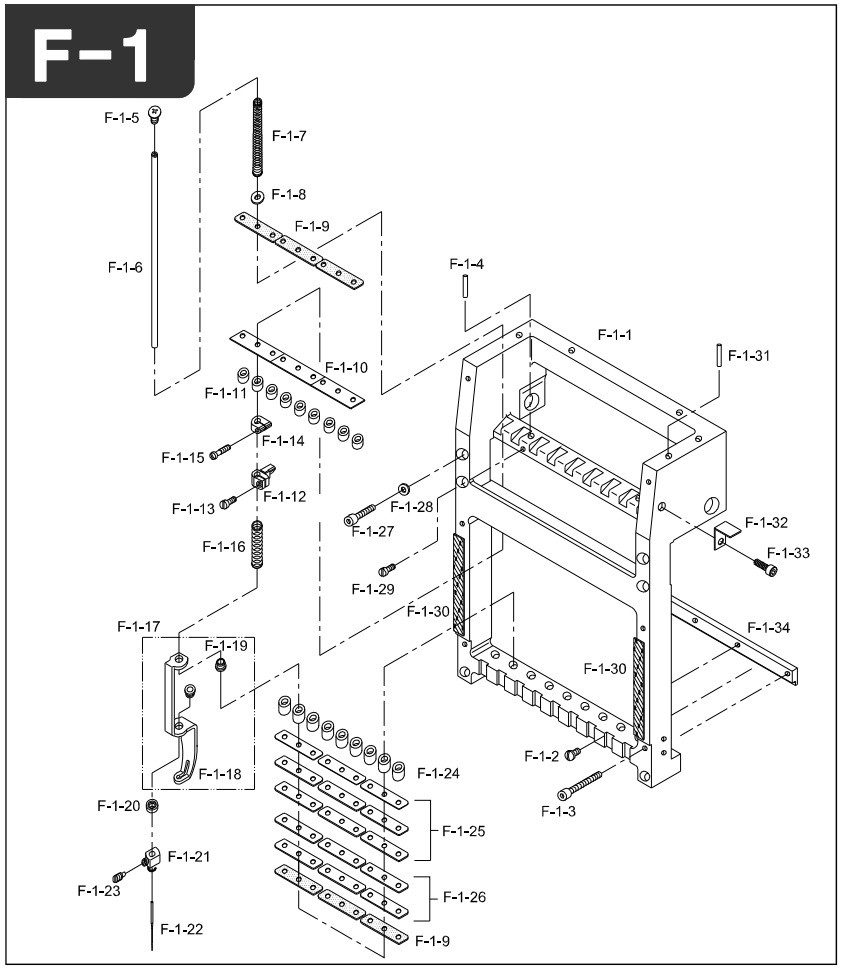

Note

Ref.No	Part No.	Part Name	Applied Period	Interchangeability	Hardware	Q'ty	Remark
F-1-31	01303700H000	Tension Plate Pin				40	
F-1-32	02022PR-UK01	Upper Shaft Cover "B" Bracket				40	
F-1-33	02014SC-7113	Hex. Socket Bolt (M4*L5)			O	40	
F-1-34	GP-011944-00	Head Rail	Sep,14,05 ~ Sep,11,08	X		20	
	GP-011944-01		Sep,11,08 ~	△			
	08201304H000	Head Rail				20	
F-1-35	AS-004811-00	Head Assy	Jun,08,06 ~	X		20	
	AS-004811-01		Oct,24,07 ~	△			

F

F-2

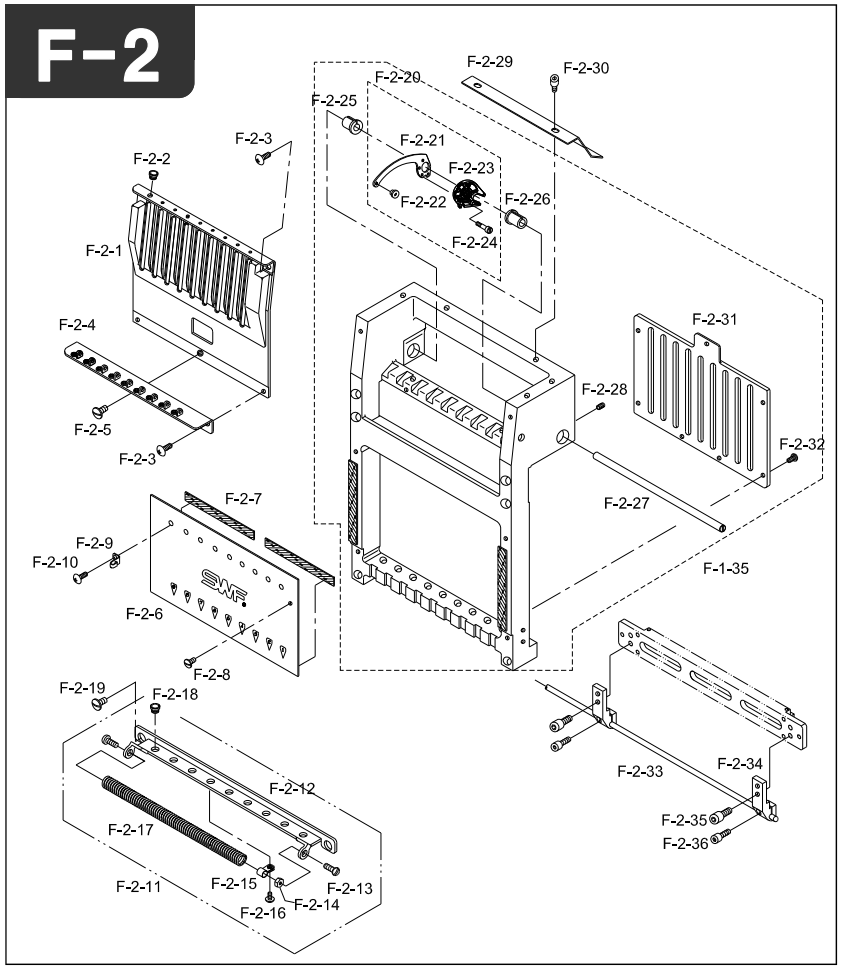

Note

Ref.No	Part No.	Part Name	Applied Period	Interchangeability	Hardware	Q'ty	Remark
F-2-1	10200103B000	Head Face Plate (U) 9C				20	
F-2-2	05452CM-A001	Eyelet "A"				180	
F-2-3	05070SC-3123	Head Face Plate (U) Screw				40	
F-2-4	10300003A000	THREAD GUIDE (M) SET (9C)				20	
F-2-5	05062SC-A001	Thread Guide (L) Screw				20	
F-2-6	05651PR-A002	Head Face Plate (L) Set 9C				20	
F-2-7	05642RB-A001	Magnetic Rubber "B"				40	
F-2-8	05070SC-3123	Thread Guide (L) Screw				20	
F-2-9	11012PR-B001	Thread Guide				180	
F-2-10	09005SC-3123	Hex.Socket Bolt(M4*L10)			O	180	
F-2-11	10400003B000	Thread Guide(L) Set				20	
F-2-12	GP-010764-00	Thread Guide (L) 9C	Jul,20,05 ~	X		20	
F-2-13	096440C-8119	Spring Adjusting Screw				40	
F-2-14	096440N-3211	Spring Adjusting Nut (9/64,N40			O	40	
F-2-15	10400304B000	Spring Holder				20	
F-2-16	05060SC-8118	Screw (M3*L3)			O	20	
F-2-17	GP-010772-00	Thread Hook Spring (9C)	Jul,21,05 ~	X		20	
F-2-18	05452CM-A001	Eyelet "A"				180	
F-2-19	05070SC-3123	Thread Guide (L) Screw				40	
F-2-20	07005BM-T121	Take-Up Lever Set				180	
F-2-21	05033PR-T121	Take-Up Lever				180	
F-2-22	07102CM-A001	Eyelet "C" (6C)				180	
F-2-23	05035PM-T121	Take-Up Lever Boss (9C)				180	
F-2-24	07003SC-A001	Take-Up Lever Screw (12C)				320	
F-2-25	08203000A000	Take-Up Lever Shaft Bush(L)				20	
F-2-26	08200800A000	Take-Up Lever Shaft Bush(R)				20	
F-2-27	08200503A000	Take-Up Lever Shaft (9C)				20	
F-2-28	07009SC-4517	Hex.Socket Set Screw (M5*L6)			O	20	
F-2-29	11046PR-AB00	Cable Support Plate				20	
	11047PR-A002	Cable Support Plate				20	
F-2-30	02023SC-7113	Hex. Socket Bolt (M4*L8)				40	
F-2-31	GP-011931-00	Needle Bar Guide Rail (9C)				20	
F-2-32	05041SC-A001	Guide Rail Serew				120	
F-2-33	18003SH-D092	Color Change Shaft				1	
F-2-34	GP-011945-00	Color Change Bracket "B"	Sep,14,05 ~	X		39	
F-2-35	02031SC-7113	Hex.Socket Screw(M5*L10)			O	77	
F-2-36	02015SC-7113	Hex. Socket Bolt (M4*L10)			O	1	

F

F-3

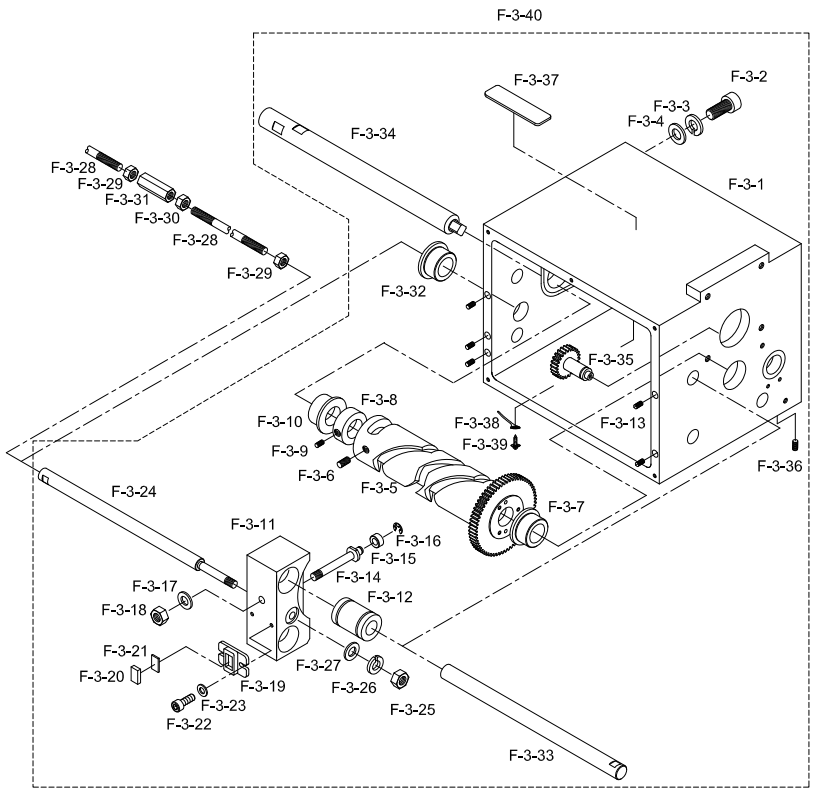

Note

Ref.No	Part No.	Part Name	Applied Period	Interchangeability	Hardware	Q'ty	Remark
F-3-1	GP-005239-00	Color Change Box 6,9C	Oct,21,04 ~ Oct,26,05	X		1	
	GP-005239-01		Oct,26,05 ~ Mar,24,09	△			
	GP-005239-02		Mar,24,09 ~	△			
	GP-005255-00	Color Change Box 12C	Oct,21,04 ~ Oct,26,05	X			
	GP-005255-01		Oct,26,05 ~ Mar,24,09	△			
	GP-005255-02		Mar,24,09 ~	△			
F-3-2	03003SC-4113	Hex. Socket Bolt "B"(M8*L35)				4	
F-3-3	15095SW-3115	Spring Washer (@8)			O	4	
F-3-4	04029SW-A001	Stud Bolt Washer (@8)			O	4	
F-3-5	13008BM-AE00	Color Change Cam Ass'Y			O	1	
	13007BM-AC00	Color Change Cam Ass'Y 9C				1	
	13006BM-AB00	Color Change Cam Ass'Y 12C				1	
F-3-6	14060AF-4517	HEX.SOCKET SCREW(M6*L6)				4	
F-3-7	13008GA-A001	Color Change Cam Gear				1	
F-3-8	CL-000353-00	Cam Collar				1	
F-3-9	04016AF-A001	Cam Collar Screw				2	
F-3-10	08101100B000	Cam Bushing				2	
F-3-11	13034AD-A001	Color Change Block				1	
F-3-12	13035BR-A001	Guide Bushing				2	
F-3-13	03020SC-A001	Drive Pin Screw (11/64,N40,L8)				5	
F-3-14	ST-000013-00	ROLLER SHAFT	Dec,18,08 ~	X		1	
F-3-15	RL-000001-00	Roller	Dec,18,08 ~	X		1	
F-3-16	13044SR-4013	E-Ring (@4)			O	1	
F-3-17	08057SW-1111	Washer (@6)			O	1	
F-3-18	13042SN-1111	Hex. Nut (M6*T5-R)			O	1	
F-3-19	13036PR-A001	Magnet Holder				1	
F-3-20	10-027C-SC53	Magnet				1	
F-3-21	08106200B000	Magnet Holder Spacer				1	
F-3-22	22006SC-7113	HEX. SOCKET BOLT (M3*L8)			O	2	
F-3-23	06011SW-2111	Washer (@3)			O	2	
F-3-24	17055SH-A005	COLOR CHANGE SHAFT "A"				1	
	17054SH-AB00	COLOR CHANGE SHAFT "A"					
F-3-25	13042SN-1111	Hex. Nut (M6*T5-R)			O	1	
F-3-26	03026SW-9115	Spring Washer (@6)			O	1	
F-3-27	03025SW-1211	Washer (@6)			O	1	

F

F-3

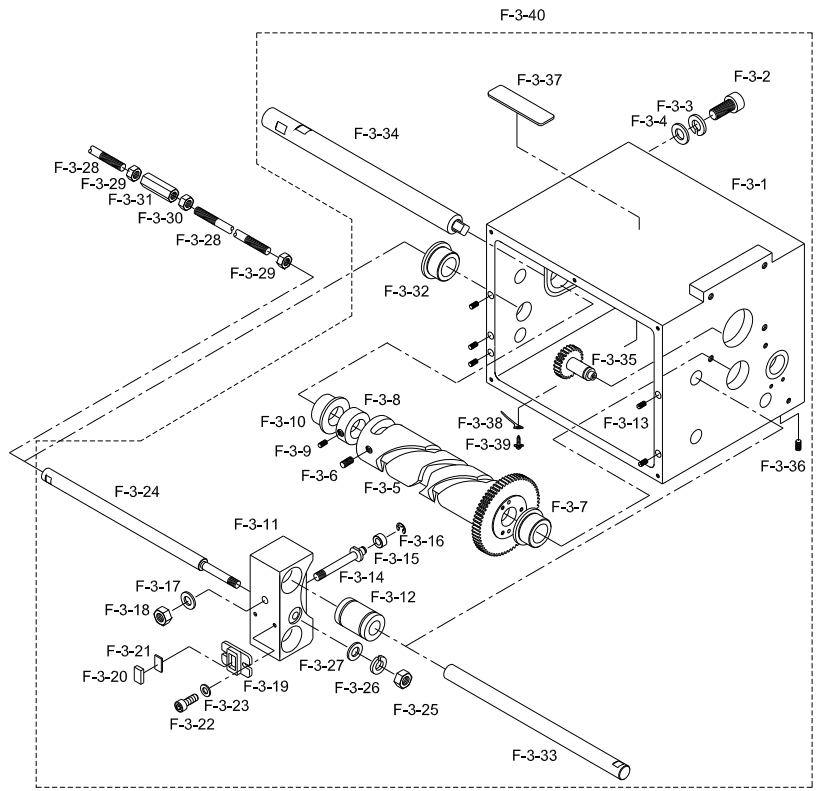

Note

Ref.No	Part No.	Part Name	Applied Period	Interchangeability	Hardware	Q'ty	Remark
F-3-28	08000100BEK0	COLOR CHANGE SHAFT "B"(L1958)				1	
	17067SH-AE00	COLOR CHANGE SHAFT "C"(L1192)				1	
	17032SH-AC01	COLOR CHANGE SHAFT "B"				1	
	17068SH-A004	COLOR CHANGE SHAFT "D"(L1915)				1	
F-3-29	13042SN-1111	Hex. Nut (M6*T5-R)			O	3	
F-3-30	17053SN-1111	Hex. Nut (M6*T5-L)			O	2	
F-3-31	17051SN-A001	Mes Driving Shaft Joint				2	
F-3-32	08101500B000	Half Turn Bushing				1	
F-3-33	08103203B000	Guide Shaft				2	
	13031SH-AB00	Guide Shaft 12C				2	
F-3-34	08101003B000	Cam Shaft (6,9C)				1	
	13009SF-AB00	Cam Shaft (12C)				1	
F-3-35	13014GA-A001	Half Turn Gear				1	
F-3-36	03020SC-A001	Drive Pin Screw (11/64,N40,L8)				1	
F-3-37	09000300B000	Magnet Sticker				1	
F-3-38	03062ET-A001	Code Clip				2	
F-3-39	22025SC-9134	Screw (M4*L10)			O	2	
F-3-40	AS-000864-00	Color Change Box Assy	Aug,16,04	X		1	
	AS-000864-01		May,01,08	△			
	AS-000864-02		Sep,18,08	△			
	AS-000864-03		Nov,10,08	△			
	AS-000864-04		Dec,18,08	△			

F

F-4

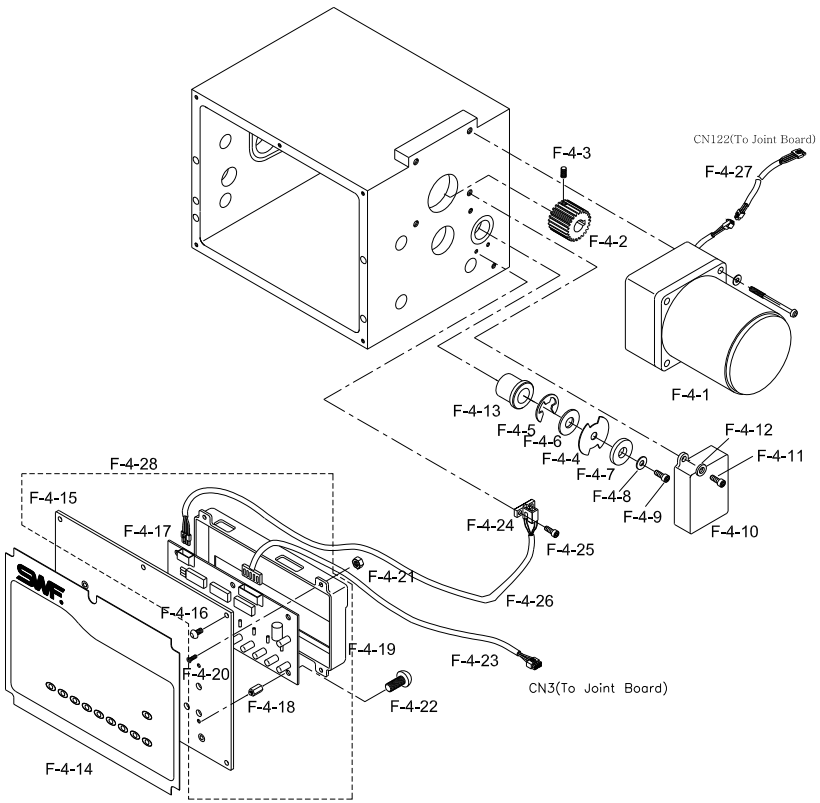

Note

Ref.No	Part No.	Part Name	Applied Period	Interchangeability	Hardware	Q'ty	Remark
F-4-1	13028MT-A001	Color Change Motor Unit				1	
F-4-2	08102900B000	Motor Gear				1	
F-4-3	13030SC-4517	Hex. Socket Set Screw (M4*L8)			O	1	
F-4-4	08101700B000	Half Turn Film				1	
F-4-5	08044SR-4013	E-Ring (@8)			O	1	
F-4-6	13018PR-A001	Half Turn Film Washer "A" (T2.3)				1	
F-4-7	13019PR-A001	Half Turn Film Washer "B" (T1)				1	
F-4-8	18015SW-3111	WASHER (4@)			O	1	
F-4-9	02023SC-7113	HEX.SOCKET BOLT (M4*L8)			O	1	
F-4-10	13025PM-A001	Sensor Cover				1	
F-4-11	02015SC-7113	HEX.SOCKET BOLT(M4*L10)			O	2	
F-4-12	18015SW-3111	Washer (4@-S)			O	2	
F-4-13	08101500B000	Half Turn Bushing				1	
F-4-14	120001003BHI9	Membrane Switch				1	
F-4-15	13053PR-A005	Membrane Switch Cover 6,9C				1	
	13052PR-AB00	Membrane Switch Cover 12C				1	
F-4-16	03006MC-9123	TRUSS SCREW(M3*L6) SUS			O	5	
F-4-17	07-001A-SW60	Color Change Board 6C				1	
	02-001A-UI12	Color Change Board (9C)				1	
	04-001A-SW60	Color Change Board 12C				1	
F-4-18	GP-008534-00	Stud Bolt	Apr,08,05 ~	X		6	
F-4-19	13060ET-A005	Board Cover 6,9C				1	
	13059ET-AB00	Board Cover 12C				1	
F-4-20	13061SC-8119	Plus Screw (M3*L10)			O	4	
F-4-21	05057SN-3211	Hex. Nut (M3)			O	4	
F-4-22	06010SC-8118	Plus Screw (M3*L4)			O	6	
F-4-23	CA-000411-00	Needle Position To Joint B/D	Aug,13,05 ~ Feb,08,06	X		1	
	CA-000411-01		Feb,08,06 ~	△			
F-4-24	13023EL-A001	Half Turn Sensor				1	
F-4-25	15163SC-3123	Truss Screw (M3*L12)			O	2	
F-4-26	MH-20	Half Turn Sensor Cable				1	
F-4-27	CA-000328-00	Color Change Motor To Joint Board	Jul,16,05 ~ Nov,17,05	X		1	
	CA-000328-01		Nov,17,05 ~	△			
F-4-28	AS-000867-00	Color Change Box Cover Assy	Aug,16,04 ~	X		1	
	AS-000867-01		May,01,08 ~	△			

F

Thread Tension Unit

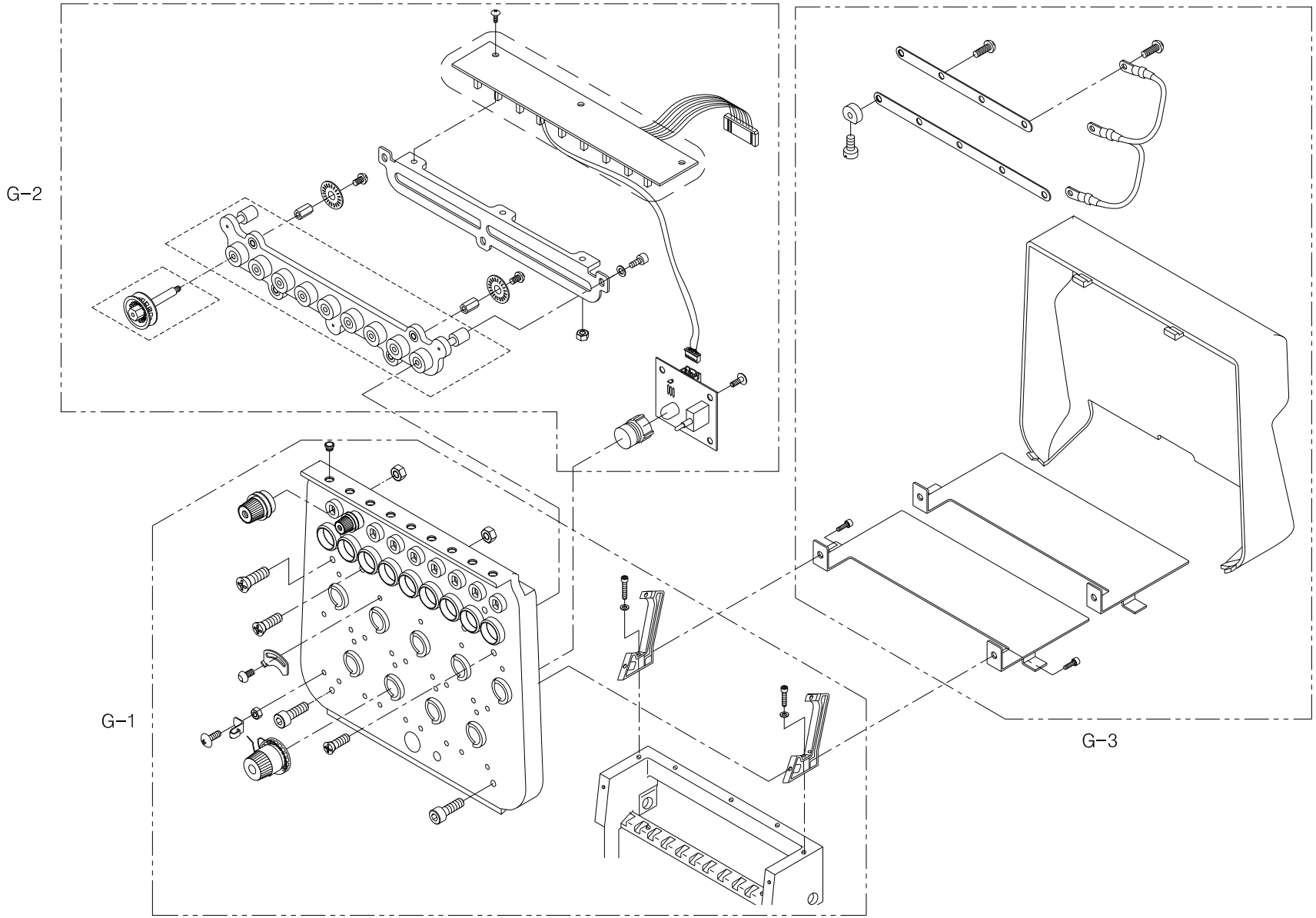

G-1

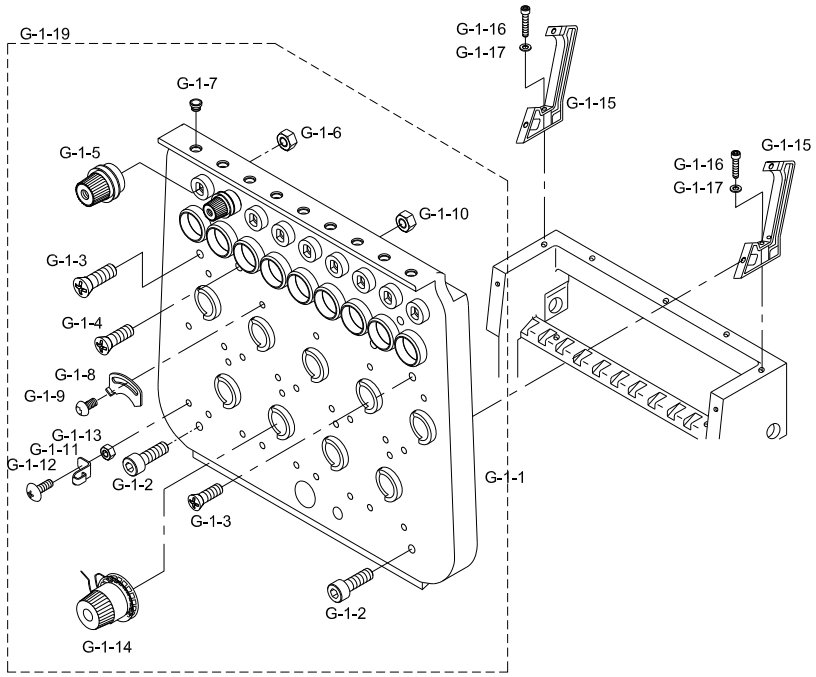

Note

Ref.No	Part No.	Part Name	Applied Period	Interchangeability	Hardware	Q'ty	Remark
G-1-1	08300102I000	TENSION UNIT (6C)				20	
	08300103I000	TENSION UNIT (9C)				20	
	08300104I000	TENSION UNIT (12C)				20	
G-1-2	02015SC-7113	Hes. Socket Bplt (M4*L10)			O	40	
G-1-3	04010MC-7113	Hex.Socket Bolt (M4*L10)			O	40	
G-1-4	02015SC-7113	C.S Screw (M4*L10)			O	40	
G-1-5	08320000I000	SUB TENSION ADJUSTING SET				180	
G-1-6	03031SN-A001	Pin. Nut (11/64,N=40)				180	
G-1-7	05452CM-A001	EYELET "A"				180	
G-1-8	11009PR-B001	Thread Breakage Detecting Plat				180	
G-1-9	09005SC-3123	Truss Screw (M3*L6)			O	180	
G-1-10	03031SN-A001	Pin. Nut (11/64,N=40)				180	
G-1-11	11012PR-B001	Thread Guide (New)				300	
	11012PR-B001	Thread Guide (New)				540	
	11012PR-B001	Thread Guide (New)				740	
G-1-12	09005SC-3123	Toothed Lock Washer				570	
G-1-13	11014SN-1211	Hex. Nut (M3)			O	570	
G-1-14	08310000B000	Tension Adjusting Set				180	
G-1-15	08202000A000	Tension Plate Holder (6,9C)				40	
	08202000I000	Tension Plate Holder (12C)				40	
G-1-16	11029SC-4113	Hex. Socket Bolt (M4*L20)			O	40	
G-1-17	05009SW-1111	Washer(@4)			O	40	
G-1-18	11029SC-4113	Hex. Socket Bolt (M4*L20)			O	40	
G-1-19	08300003I000	TENSION UNIT Assy (9C)				20	

G

G-2

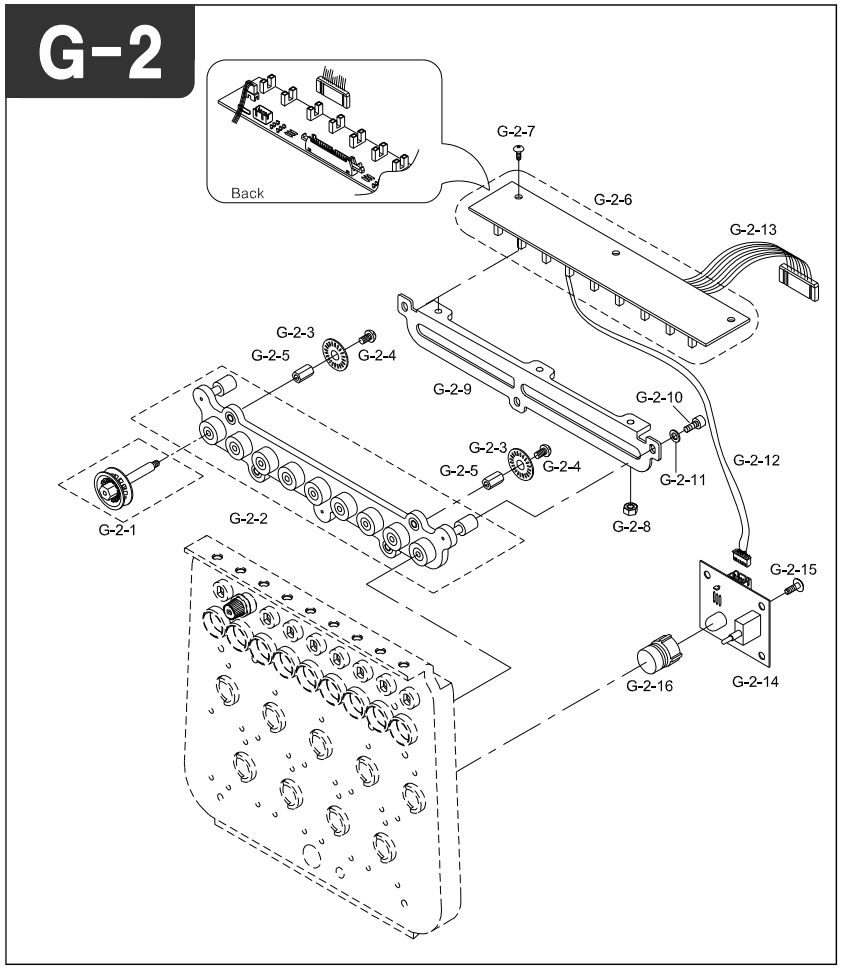

Ref.No	Part No.	Part Name	Applied Period	Interchangeability	Hardware	Q'ty	Remark
G-2-1	11075PM-B001	Thread Sensor Roller(B1)Set				162	
G-2-2	08300702I000	Roller Base Ass'Y (6C)				18	
	08300703I000	Roller Base Ass'Y (9C)				18	
	08300704I000	Roller Base Ass'Y (12C)				18	
G-2-3	GP-005179-00	THREAD BREAKAGE DETECT WHEEL	Oct,13,04 ~	X		162	
G-2-4	08011SC-8118	Screw (M2*L4)			O	162	
G-2-5	11083CW-B001	Thread Detecting Wheel Stud				90	
	08308300B000	Thread Detecting Wheel Stud				72	
G-2-6	18009EL-WH06	Wheel Sensor Board (6C)				18	
	20009EL-WH09	Wheel Sensor Board (9C)				18	
	20009EL-WH12	Wheel Sensor Board (12C)				18	
G-2-7	02010SC-3123	Truss Screw (M4*L8)			O	162	
G-2-8	05016SN-1211	Nut (@4)			O	54	
G-2-9	08300202I000	BOARD BASE (6C)				18	
	08300203I000	BOARD BASE (9C)				18	
	08300204I000	BOARD BASE (12C)				18	
G-2-10	02023SC-7113	Hex.Socket Bolt (M4*L8)			O	54	
G-2-11	06003SW-2111	Washer (4@-S)			O	54	
G-2-12	MH-28	Plate Led S/W Board Cable				18	
G-2-13	MH-35-01	Sensor Board/Adjusting Plate Cable				18	
G-2-14	03-0000-EMB1	Head On/Off S/W Board (6,12C)				18	
	02-0000-EMB1	Head On/Off S/W Board (9,15C)				18	
G-2-15	09005SC-3123	Truss Screw (M3*L6)			O	72	
G-2-16	08300400A000	Lamp Cover				18	

Note

G-2 : G-1-19

G

G-3

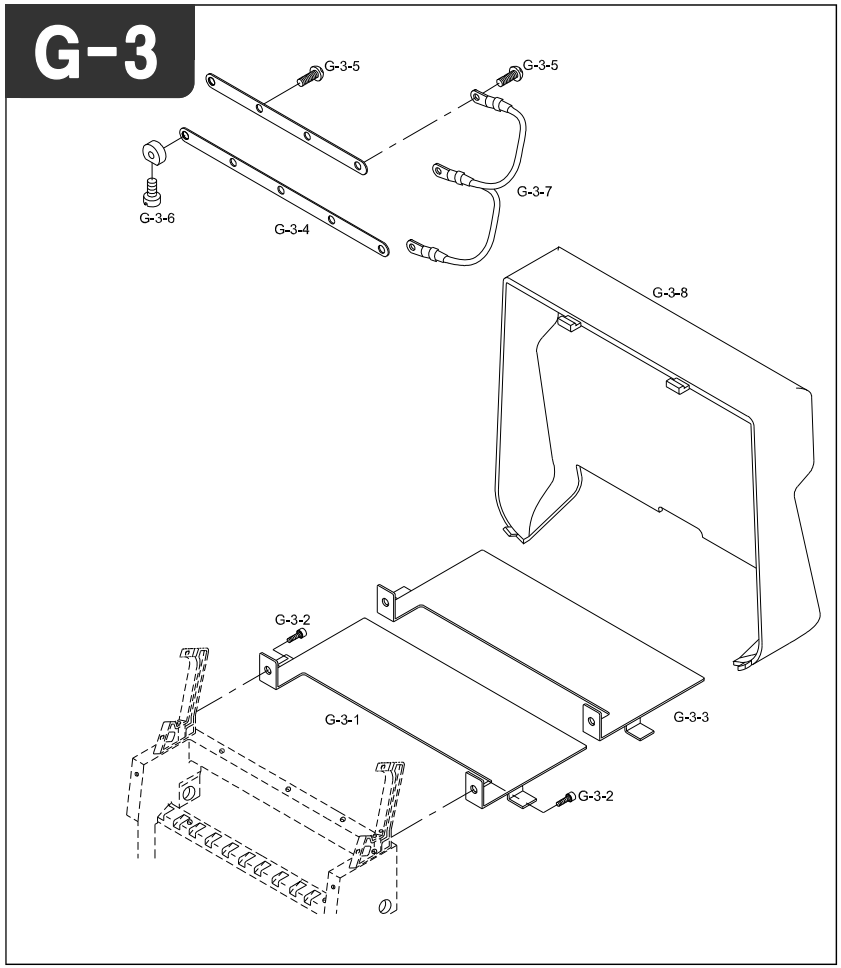

Ref.No	Part No.	Part Name	Applied Period	Interchangeability	Hardware	Q'ty	Remark
G-3-1	11033PR-AE00	Cover Plate 6C				17	
	11032PR-A002	Cover Plate 9C				17	
	11031PR-AB00	Cover Plate 12C				17	
G-3-2	02023SC-7113	Hex. Socket Bolt (M4*L8)			O	6	
G-3-3	08003202B000	Cover Plate (R) 6C				1	
	08003203B000	Cover Plate (R) 9C				1	
	08003204B000	Cover Plate (R) 12C				1	
G-3-4	08300302I000	CONNECTION PLATE (6C)				36	
	08300303I000	CONNECTION PLATE "A" (9C)				18	
	08300403I000	CONNECTION PLATE "B" (9C)				18	
	08300304I000	CONNECTION PLATE (12C)				18	
G-3-5	09005SC-3123	Truss Screw (M3*L6)			O	162	
G-3-6	11009SC-A001	Stud Screw				162	
G-3-7	MH-30	Wheel Earth 9C				18	
G-3-8	08000803I000	TENSION PLATE COVER (9C)				18	
	08000804I000	TENSION PLATE COVER (12C)				18	

Note

G-3-4~7 : G-1-19

G

X-Y Axis Drive System (Y-Stroke 1000 Below)

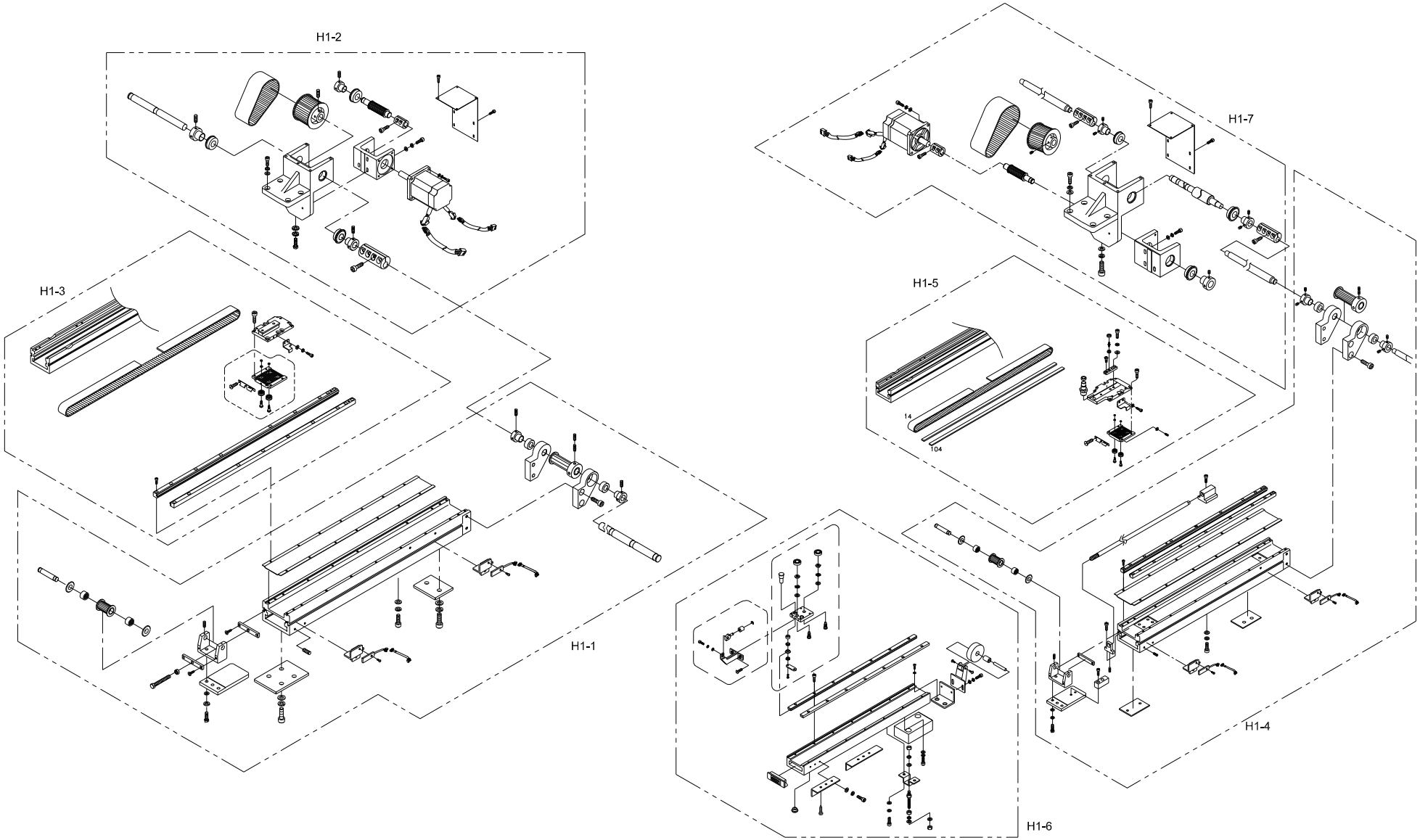

H1-1

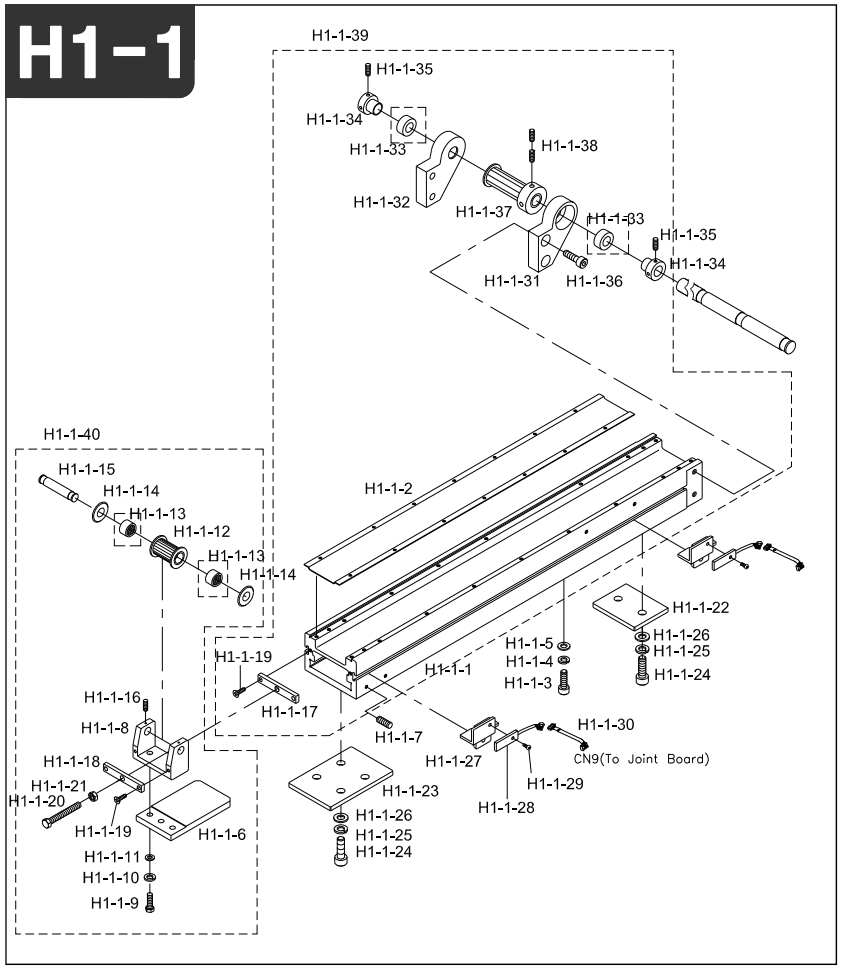

Note

Ref.No	Part No.	Part Name	Applied Period	Interchangeability	Hardware	Q'ty	Remark
H1-1-1	04100100ID00	X Axis Frame				3	
H1-1-2	04100100BH01	Guard Plate For Timing Belt (L=564)				3	
	04100100BH0A	Guard Plate For Timing Belt (L=964)				3	
H1-1-3	15017SC-4113	Hex. Socket Bolt (M8*L45)			O	12	
	15019SC-4113	Hex. Socket Bolt (M8*L40)			O	12	
H1-1-4	15095SW-3115	Spring Washer (@8)			O	12	
H1-1-5	04029SW-A001	Stud Bolt Washer (@8)			O	12	
H1-1-6	04202400B000	Timing Pulley Tension Base				3	
H1-1-7	15090SC-B001	Hex.Socket Set Screw (M6*L10)			O	6	
H1-1-8	15027DC-A001	Timing Pulley Bracket (W)				3	
H1-1-9	15028SC-1111	Hex. Bolt (M6*L20)			O	6	
H1-1-10	03026SW-9115	Spring Washer (@6)			O	6	
H1-1-11	08057SW-1111	Washer (@6)			O	6	
H1-1-12	04600100B000	TIMING PULLEY D(18-S5M-32F)				3	
H1-1-13	15042BR-A001	Needle Bearing (1210zz)			O	6	
H1-1-14	15046RB-A001	Driving Pin Washer				6	
H1-1-15	04104400B000	Timing Pulley Driving Pin "B"				3	
H1-1-16	03022SC-4517	Hex.Socket Screw (M4*L5)			O	6	
H1-1-17	15055PR-A001	Tension Rivet Plate (W)				3	
H1-1-18	15056PR-A001	Tension Plate (W)				3	
H1-1-19	15089SC-7119	C.S Screw (M4*L12)			O	12	
H1-1-20	15058SC-1211	Hex. Bolt (M6*L58)			O	3	
H1-1-21	14064SN-7311	Hex.Nut (M6-No3)			O	3	
H1-1-22	04000100H000	X-Lm Guide Support Plate (A)				3	
H1-1-23	04000200H000	X-Lm Guide Support Plate (B)				3	
H1-1-24	15020SC-4113	Hex,Socket Bolt (M8*L50)			O	18	
H1-1-25	15095SW-3115	Spring Washer (@8)			O	18	
H1-1-26	04029SW-A001	Stud Bolt Washer(S) (@8)			O	18	
H1-1-27	GP-008025-00	Sensor Bracket X,Y	Mar,17,05 ~	X		2	
H1-1-28	EP-000067-00	X-Sensor	Dec,05,05 ~	X		2	
H1-1-29	02023SC-7113	Position Adjusting Screw				4	
H1-1-30	CA-000324-00	X-Sensor To Joint Board	Jul,16,05 ~	X		1	
H1-1-31	04000650I000	TIMING PULLEY BRACKET (L)				3	
H1-1-32	04000660I000	TIMING PULLEY BRACKET (R)				3	
H1-1-33	04000630I000	BEARING (6905ZZ)			O	6	
H1-1-34	04003500I000	NEEDLE BEARING COLLAR				6	
H1-1-35	14060AF-4517	HEX.SOCKET SCREW(M6*L6)			O	12	

H1-1

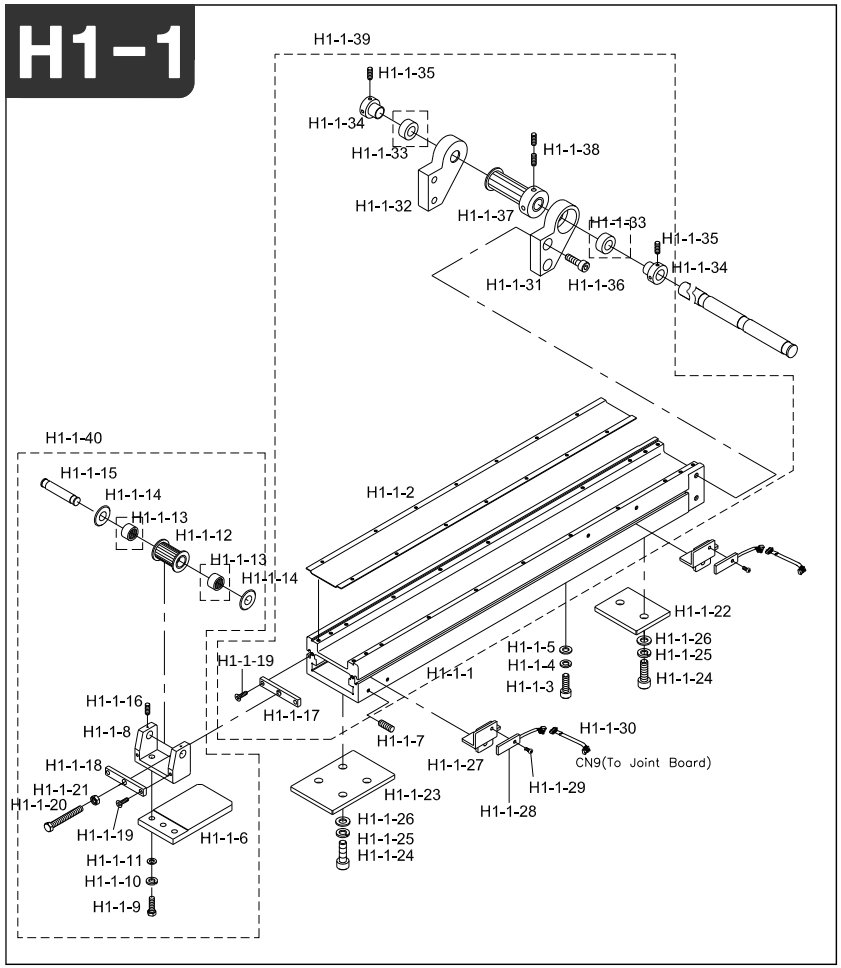

Note

Ref.No	Part No.	Part Name	Applied Period	Interchangeability	Hardware	Q'ty	Remark
H1-1-36	14002SC-7113	Hex.Socket Set Screw(M6*L15)			O	12	
H1-1-37	04000400B000	X-TIMING PULLEY (S5M)				3	
H1-1-38	14060AF-4517	Hex.Socket Screw(M6*L6)			O	12	
H1-1-39	04100000ID0D	X-Roller Plate Assy				3	
H1-1-40	AS-008580-00	Bracket Fixed Plate Assy	Apr,24,08 ~	X		3	

H1

H1-2

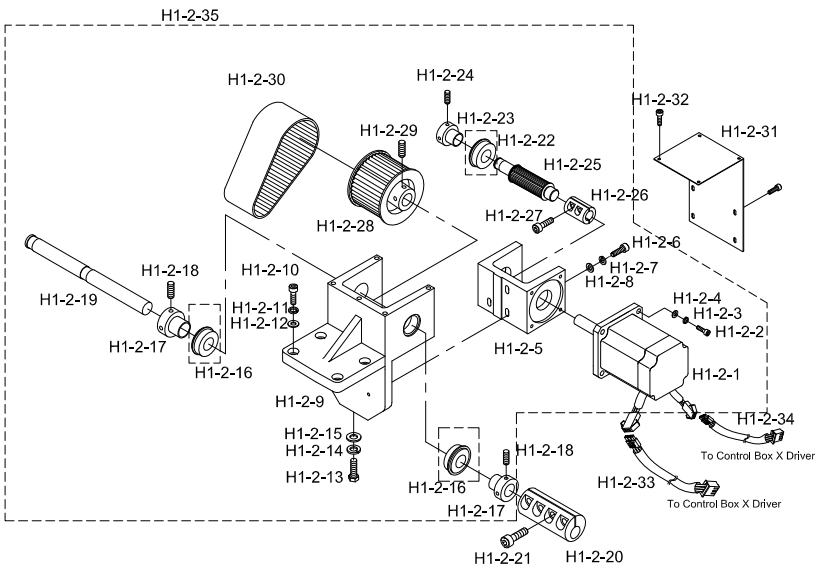

Note

Ref.No	Part No.	Part Name	Applied Period	Interchangeability	Hardware	Q'ty	Remark
H1-2-1	DMPD3-000002	Motor				1	
H1-2-2	08062SC-4113	Hex.Socket Bolt(M5*L20)			O	4	
H1-2-3	08070SW-9115	Spring Washer (@8)			O	4	
H1-2-4	18049SW-3111	Stud Bolt Washer(S) (@8)			O	4	
H1-2-5	GP-020302-00	X-Motor Bracket	Aug,11,06 ~			1	
H1-2-6	08087SC-7113	Hex.Socket Bolt(M8*L25)			O	3	
H1-2-7	15095SW-3115	Spring Washer (@8)			O	3	
H1-2-8	04029SW-A001	Stud Bolt Washer(S) (@8)			O	3	
H1-2-9	04001800I000	X Motor Base				1	
H1-2-10	08087SC-7113	Hex.Socket Bolt(M8*L25)			O	4	
H1-2-11	15095SW-3115	Spring Washer (@8)			O	4	
H1-2-12	04029SW-A001	Stud Bolt Washer(S) (@8)			O	4	
H1-2-13	15019SC-4113	Hex. Socket Bolt (M8*L40)			O	1	
H1-2-14	15095SW-3115	Spring Washer (@8)			O	1	
H1-2-15	04029SW-A001	Stud Bolt Washer(S) (@8)			O	1	
H1-2-16	02-009A-8180	Ball Bearing (6004NR)			O	2	
H1-2-17	03005210H000	COLLAR "A"				2	
H1-2-18	14060AF-4517	Hex.Socket Screw(M6*L6)				4	
H1-2-19	04001000I004	X Driving Pulley Shaft				1	
H1-2-20	GP-044599-00	COUPLING @20	Dec,23,08 ~	X		3	
H1-2-21	03016SC-4113	Screw			O	12	
H1-2-22	02-009A-8180	Ball Bearing (6004NR)			O	1	
H1-2-23	04003500B000	Bearing Stopper Collar "A"				1	
H1-2-24	14060AF-4517	Hex.Socket Screw(M6*L6)			O	2	
H1-2-25	PL-000054-00	X-Y Driving Shaft Timing Pulley	Jul,05,10 ~			1	
H1-2-26	GP-020301-00	Driving Shaft Coupling	Aug,11,06 ~ Aug06,07	X		1	
	GP-020301-01		Aug06,07 ~ Nov,13,08	△			
	GP-020301-02		Nov,13,08 ~	△			
H1-2-27	08091SC-7113	Hex.Socket Bolt(M6*L20)			O	2	
H1-2-28	04100330I000	Timing PULLEY(72-S5M-050)				1	
H1-2-29	14061AF-4517	Hex.Socket Screw(M8*L8)			O	8	
H1-2-30	04100410I000	Timing BELT (50-S5M-475)				1	
H1-2-31	12002000I000	X-Y Axis Servo Motor Cover				1	
H1-2-32	18033SC-3123	Truss Screw (M5*L6)			O	8	
H1-2-33	CA-001053-00	X-Motor To Control Box X-Driver Cable	Mar,03,06 ~	X		1	
H1-2-34	CA-001054-00	X-Motor To Encoder Cable To X-Driver Cable	Mar,03,06 ~	X		1	
H1-2-35	AS-008153-00	X Motor Base Assy	Jan,30,08 ~	X		1	
	AS-008153-01		Mar,09,09 ~	△			

H1-3

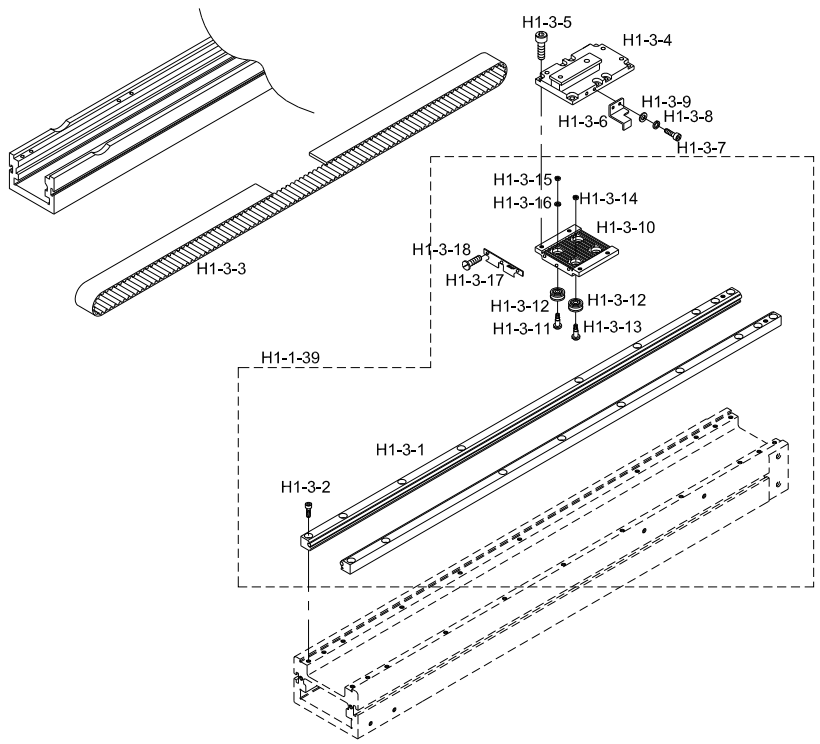

Note

Ref.No	Part No.	Part Name	Applied Period	Interchangeability	Hardware	Q'ty	Remark
H1-3-1	15037AD-BC11	X-Lm Guide Rail				6	
H1-3-2	04016MC-4113	CAM ROLLER GUIDE FIXED SCREW				36	
H1-3-3	15048BT-AC00	X-Driver Timing Belt (L1130)				3	
	15048BT-AC30	X-Driver Timing Belt (L1730)				3	
H1-3-4	04000500I000	X Moving Plate				3	
H1-3-5	02023SC-7113	Hex.Socket Bolt(M4*L12)			O	24	
H1-3-6	04000700F000	Sensor Perception Plate X,Y				1	
H1-3-7	22006SC-7113	Hex. Socket Bolt (M3*L8)			O	2	
H1-3-8	11019SW-9115	Spring Washer (3@)			O	2	
H1-3-9	06011SW-2111	Washer (@3)			O	2	
H1-3-10	04105100B000	X BELT CATCHER PLATE (B)				3	
H1-3-11	15001BR-B001	Cam Roller Baearing				12	
H1-3-12	15002CW-B001	Cam Roller Stud (A)				6	
H1-3-13	15003CW-B001	Cam Roller Stud (B)				6	
H1-3-14	18048SW-3115	Spring Washer (5@)			O	6	
H1-3-15	18015SW-3111	Washer (4@-S)			O	6	
H1-3-16	18014SW-3115	Spring Washer (@4-No2)			O	6	
H1-3-17	04000200B000	CAM ROLLER END SEAL B				6	
H1-3-18	03065SC-A001	GUARD PLATE SCREW				18	

H1-4

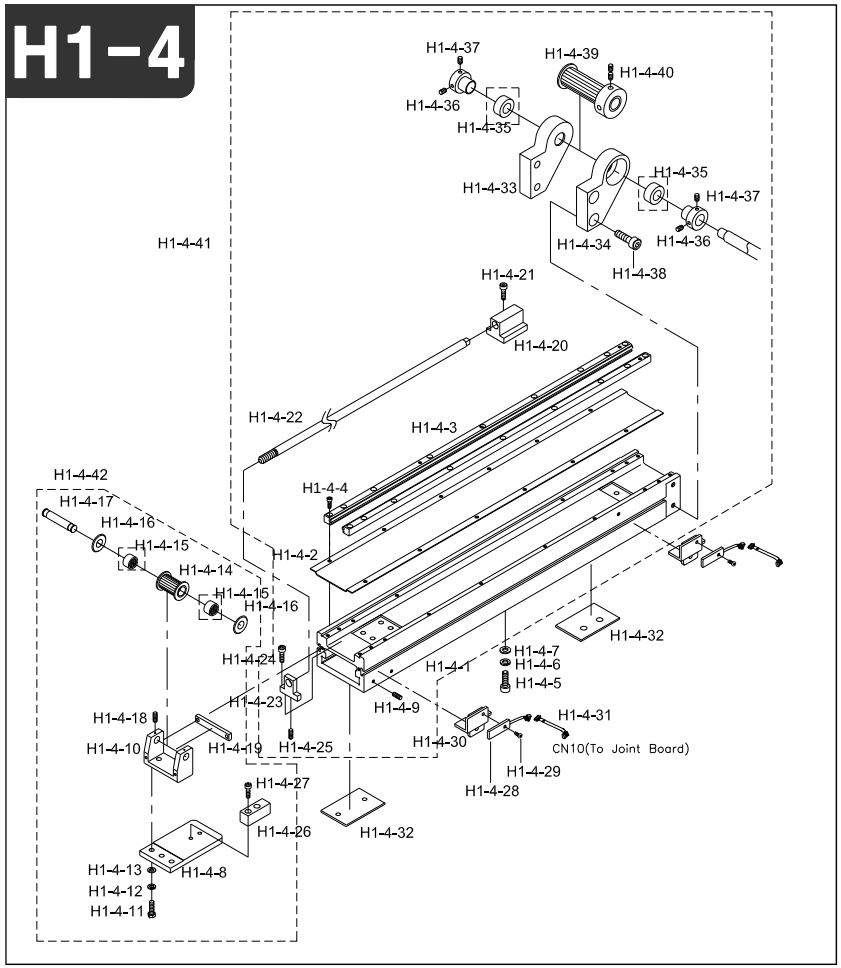

Note

Ref.No	Part No.	Part Name	Applied Period	Interchangeability	Hardware	Q'ty	Remark
H1-4-1	04200100I004	Y-Axis Frame L=638				4	
H1-4-2	04300100B004	Guard Plate For Timing Belt A				2	
	04200100B004	Guard Plate For Timing Belt B				2	
H1-4-3	15030AD-B021	Y Cam Roller Guide Rail L=633				8	
H1-4-4	04016MC-4113	Cam Roller Guide Fixed Screw				8	
H1-4-5	15017SC-4113	Hex. Socket Bolt (M8*L45)			O	16	
	15019SC-4113	Hex. Socket Bolt (M8*L40)			O	16	
H1-4-6	15095SW-3115	Spring Washer (@8)			O	16	
H1-4-7	04029SW-A001	Stud Bolt Washer (@8)			O	16	
H1-4-8	04302300B000	Timing Pulley Tension Base(N) (Belt:35)				2	
	04202400B000	Timing Pulley Tension Base				2	
H1-4-9	15090SC-B001	Hex.Socket Set Screw (M6*L10)			O	8	
H1-4-10	15026DC-A001	Timing Pulley Tension Bracket (N)				2	
	15027DC-A001	Timing Pulley Bracket (W)				2	
H1-4-11	15028SC-1111	Hex. Bolt (M6*L20)			O	12	
H1-4-12	03026SW-9115	Spring Washer (@6)			O	12	
H1-4-13	08057SW-1111	Washer (@6)			O	12	
H1-4-14	06011SW-2111	Washer(@3)			O	8	
H1-4-15	15042BR-A001	Needle Bearing (1210zz)			O	8	
H1-4-16	15046RB-A001	Driving Pin Washer				8	
H1-4-17	04104300B000	Timing Pulley Driving Pin "A" (Belt:35)				2	
	04104400B000	Timing Pulley Driving Pin "B" (Belt:48)				2	
H1-4-18	03022SC-4517	Hex.Socket Screw (M4*L5)			O	8	
H1-4-19	15055PR-A001	Tension Rivet Plate (W)				2	
H1-4-20	04200500B000	Y Adjusting Shaft Guide (B)				4	
H1-4-21	16059SC-7113	Hex.Socket Bolt (M6*L12)			O	16	
H1-4-22	15033CW-B001	Y-Adjusting Shaft				4	
H1-4-23	04200400B000	Y Adjusting Shaft Guide (A)				4	
H1-4-24	16059SC-7113	Hex.Socket Bolt (M6*L12)			O	8	
H1-4-25	14061AF-4517	Hex.Socket Set Screw (M8*L8)			O	4	
H1-4-26	04200600B000	Adjusting Shaft Stopper				4	
H1-4-27	14006SC-7113	Hex.Socket Set Screw(M8*L15)			O	8	
H1-4-28	EP-000067-00	Xy-Sensor	Dec,05,05 ~	X		2	
H1-4-29	02023SC-7113	Plus Screw (M3*L8)			O	4	
H1-4-30	EP-008025-00	Perception Sensor Bracket X,Y	Jul,16,05 ~	X		2	
H1-4-31	CA-000325-00	Y-Sensor To Joint Board Cable				12	
H1-4-32	15112PR-A001	L/M Guide Plate "A-2"				8	

H1-4

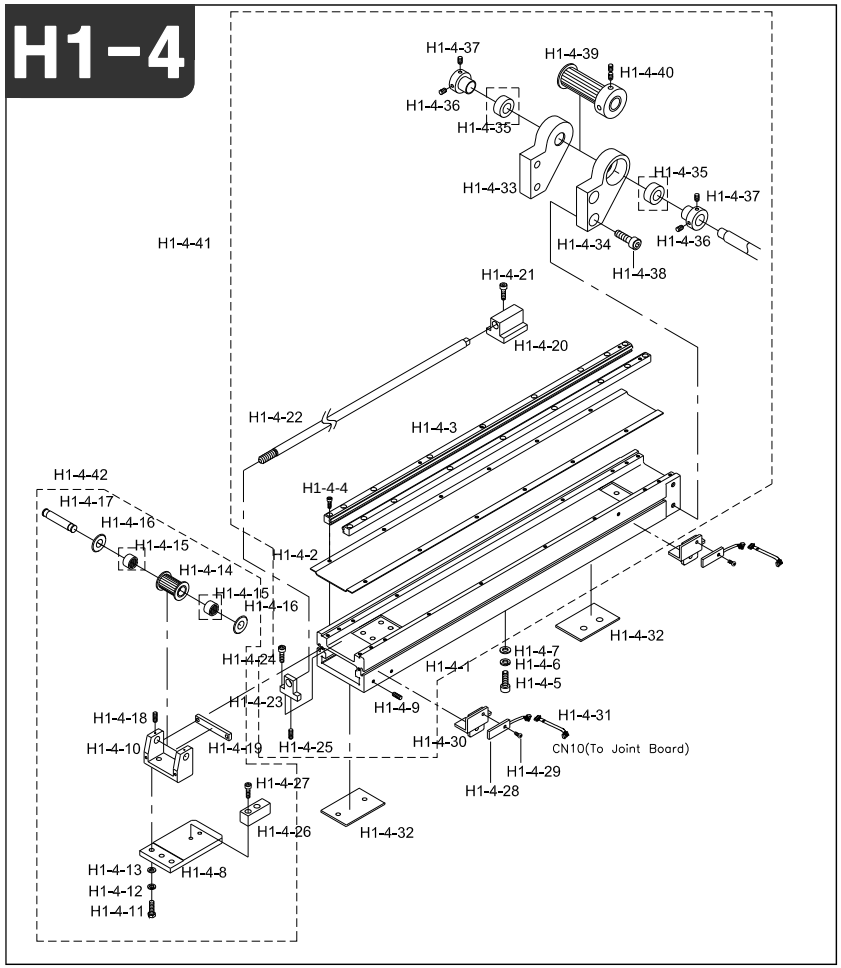

Note

Ref.No	Part No.	Part Name	Applied Period	Interchangeability	Hardware	Q'ty	Remark
H1-4-33	04000650I000	TIMING PULLEY BRACKET (L)				4	
H1-4-34	04000660I000	TIMING PULLEY BRACKET (R)				4	
H1-4-35	04000630I000	Needle Bearing (Nk18/16A)			O	8	
H1-4-36	04003500I000	NEEDLE BEARING COLLAR				8	
H1-4-37	14060AF-4517	HEX.SOCKET SCREW(M6*L6)			O	16	
H1-4-38	14002SC-7113	Hex.Socket Bolt (M6*L15)			O	16	
H1-4-39	04000400B000	X-TIMING PULLEY (S5M)				4	
H1-4-40	14060AF-4517	Hex.Socket Screw(M6*L6)			O	16	
H1-4-41	AS-000878-00	Y-Cam Roller Guide Plate Assy	Aug,06,04 ~	X		4	
H1-4-42	AS-008813-00	Bracket Fixed Plate Assy	Jun,03,08 ~	X		4	

H1-5

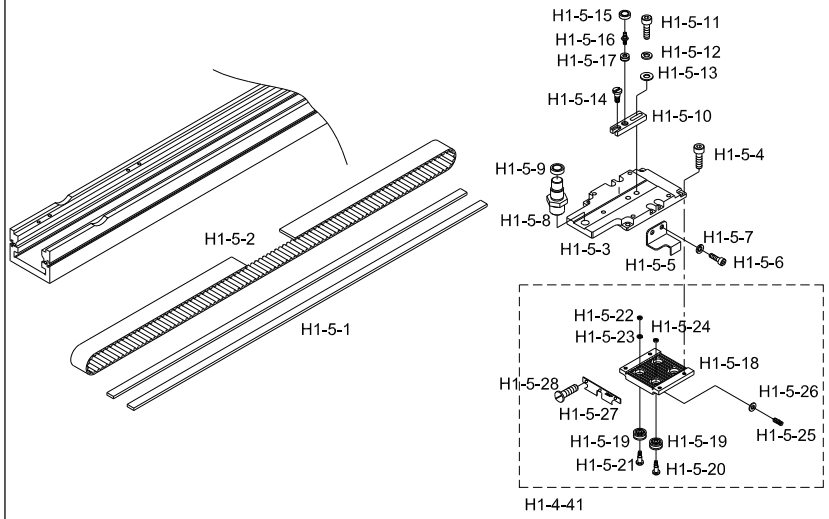

Note

Ref.No	Part No.	Part Name	Applied Period	Interchangeability	Hardware	Q'ty	Remark
H1-5-1	18062SF-A001	Y-Axis Sash (L) Felt				8	
H1-5-2	15050BT-A021	Y-Drive Timing Belt "A" 5M*L1865 (W:35)				2	
	15051BT-A021	Y-Drive Timing Belt "B" 5M*L1865 (W:48)				2	
H1-5-3	04000900I000	Y-Axis Bearing Block (Rear)				4	
H1-5-4	15067SC-A001	Hex.Socket Bolt (M4*L7)			O	32	
H1-5-5	04000800H000	Sensor Plate "Y"				1	
H1-5-6	22006SC-7113	Hex. Socket Bolt (M3*L8)			O	2	
H1-5-7	11019SW-9115	Spring Washer (3@)			O	2	
H1-5-8	15098CW-A001	RAIL GUIDE PIN "B"				4	
H1-5-9	15077BR-B001	Ball Bearing (Lr606Nppu)			O	8	
H1-5-10	GP-006299-00	ADJUSTING BLOCK FOR BEARING	Dec,18,04 ~	X		4	
H1-5-11	03016SC-4113	Hex. Socket Bolt (M5*L15)			O	8	
H1-5-12	18048SW-3115	Spring Washer (@5)			O	8	
H1-5-13	WS-000083-00	@5 - Washer	Dec,20,04 ~	X	O	8	
H1-5-14	15074SC-A001	Stopper Stud				4	
H1-5-15	15077BR-B001	Ball Bearing (Lr606Nppu)			O	8	
H1-5-16	15098CW-A001	Rail Guide Pin "B"				4	
H1-5-17	18111CW-B001	Frame "E" Roller				1	
H1-5-18	18033SC-3123	Truss Screw (M5*L6)			O	8	
H1-5-19	15001BR-B001	Cam Roller Baearing				16	
H1-5-20	15003CW-B001	Cam Roller Stud (B)				8	
H1-5-21	15002CW-B001	Cam Roller Stud (A)				8	
H1-5-22	16018SW-1111	Washer (@5)			O	16	
H1-5-23	18048SW-3115	Spring Washer (@5)			O	16	
H1-5-24	18015SW-3111	Washer (4@-S)			O	16	
H1-5-25	07035SC-7113	Bracket Screw (M3*L6)			O	2	
H1-5-26	06011SW-2111	Washer (@3)			O	1	
H1-5-27	04000100B000	Cam Roller End Seal "A"				4	
	04000200B000	Cam Roller End Seal "B"				4	
H1-5-28	03065SC-A001	GUARD PLATE SCREW				12	

H1-6

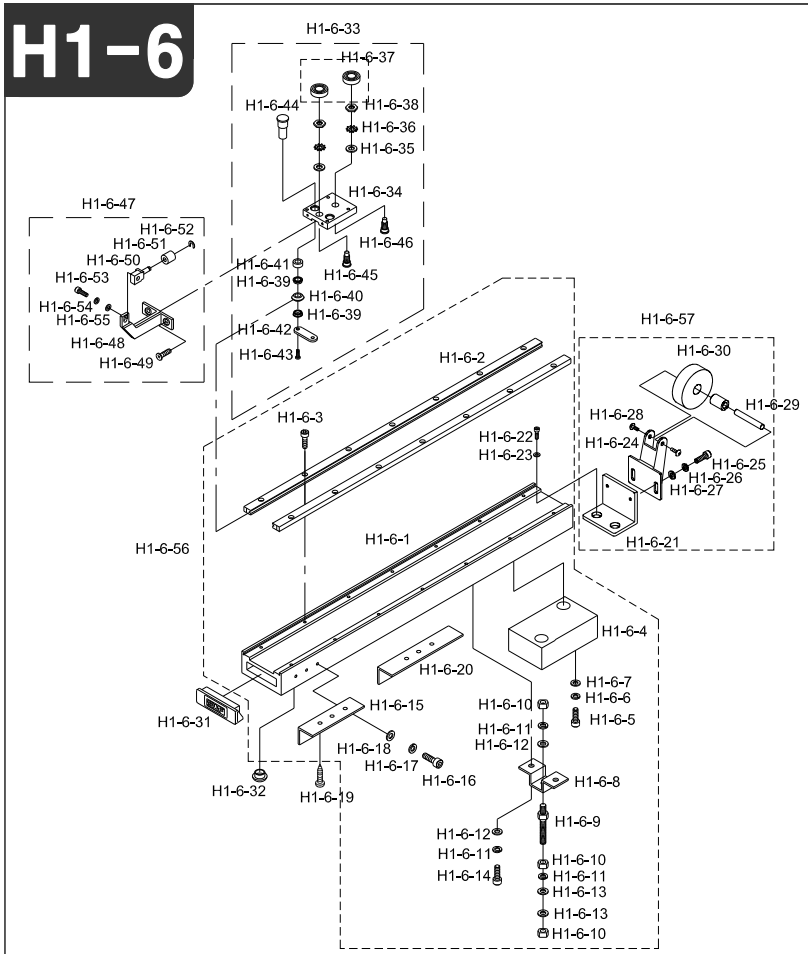

Note

Ref.No	Part No.	Part Name	Applied Period	Interchangeability	Hardware	Q'ty	Remark
H1-6-1	15107AD-B021	V-Rail Bracket				4	
H1-6-2	15104AF-A021	Y-Axis Rail Guide				8	
H1-6-3	02015SC-7113	Hex. Socket Bolt (M4*L10)			O	56	
H1-6-4	15095AD-B001	Spacer				4	
H1-6-5	15020SC-4113	Hex. Socket Bolt (M8X150)			O	8	
H1-6-6	15095SW-3115	Spring Washer (@8)			O	8	
H1-6-7	08041SW-1111	Washer (@8-S)			O	8	
H1-6-8	15097PR-B001	Stud Bracket				4	
H1-6-9	15096CW-B001	Stud Bolt				4	
H1-6-10	04032SN-A001	Hex. Nut (M8)			O	4	
H1-6-11	15095SW-3115	Spring Washer (@8)			O	4	
H1-6-12	08041SW-1111	Washer (@8-S)			O	4	
H1-6-13	04029SW-A001	Stud Bolt Washer (@8)			O	4	
H1-6-14	14006SC-7113	Hex.Socket Set Screw(M8*L15)			O	8	
H1-6-15	15093AD-B001	Table Support				16	
H1-6-16	18047SC-7113	Hex. Socket Bolt (M5*L15)			O	48	
H1-6-17	18048SW-3115	Spring Washer (5@)			O	48	
H1-6-18	18049SW-3111	Washer (@5)			O	45	
H1-6-19	16010SC-8330	Tapping Screw (M6*L25)			O	48	
H1-6-20	15094AD-B001	Table Support				8	
H1-6-21	GP-013196-00	Support Bracket	Nov,10,05 ~	X		4	
H1-6-22	14006SC-4113	Hex. Socket Bolt (M8*L15)			O	8	
H1-6-23	15077SW-2111	Washer (@8)			O	8	
H1-6-24	GP-006914-00	Roller Bracket	Jan,12,05 ~ Jun,02,05	X		4	
	GP-006914-01		Jun,02,05 ~ May,03,06	△			
	GP-006914-02		May,03,06 ~	△			
H1-6-25	02023SC-7113	Hex. Socket Bolt (M4*L8)			O	8	
H1-6-26	02028SW-9115	Spring Washer (@4)			O	8	
H1-6-27	05009SW-1111	Washer(@4)			O	8	
H1-6-28	09005SC-3123	Truss Screw (M3*L6)			O	8	
H1-6-29	PN-000133-00	Roller Pin	Jan,12,05 ~	X		4	
H1-6-30	GP-006917-00	Guide Roller	Jan,12,05 ~ Jun,02,05	X		4	
	GP-006917-01		Jun,02,05 ~	△			
H1-6-31	15092RB-B001	Rubber Cap (A)				4	
H1-6-32	15091RB-A001	Rubber Cap (B)				4	
H1-6-33	AS-004904-00	V-Roller Guide Set		X		4	
H1-6-34	08400010B000	Y-Axis Feed Plate "D"				4	

H1-6

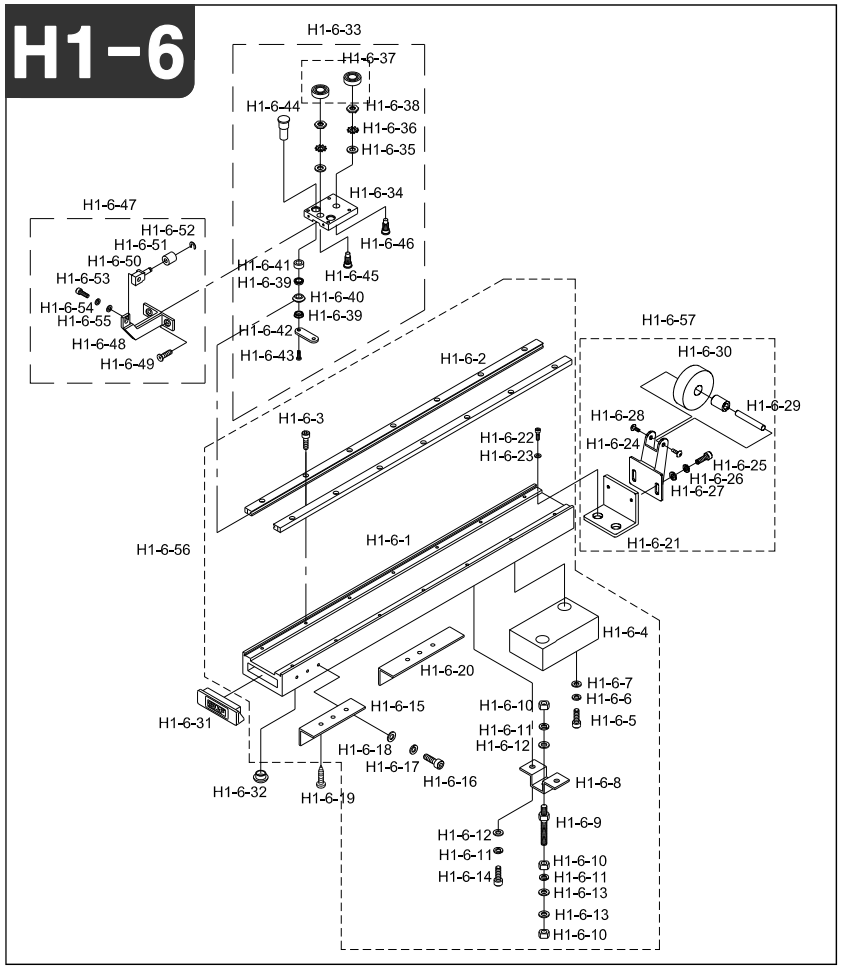

Note

Ref.No	Part No.	Part Name	Applied Period	Interchangeability	Hardware	Q'ty	Remark
H1-6-35	15077SW-2111	Washer (@8)			O	8	
H1-6-36	15078SW-8113	Tooghed Lock Washer(@8)			O	8	
H1-6-37	15077BR-B001	Ball Bearing (Lr606Nppu)			O	8	
H1-6-38	15079SN-2311	Rail Guide Shaft Nut				8	
H1-6-39	15106BR-A001	Flange Bearing (1280Zz)			O	16	
H1-6-40	15130AF-A001	Roller Guide				8	
H1-6-41	15092CW-A031	Stopper Washer				8	
H1-6-42	15137PR-A001	Rail Guide Shaft Bracket				4	
H1-6-43	05028SC-A001	Holder Screw				8	
H1-6-44	15076CW-A031	Rail Guide Pin "C' (L19.1)				4	
H1-6-45	15074CW-B001	Rail Guide Pin "A"				8	
H1-6-46	15075CW-B001	Rail Guide Pin "B"				8	
H1-6-47	15134BM-B001	Roller Bracket Ass'Y				4	
H1-6-48	08000700B000	Bracket				4	
H1-6-49	02002SC-7119	Pluss Screw (M4*L8)			O	8	
H1-6-50	10507400B000	Roller Position Adjusting Pin				4	
H1-6-51	15133CW-B001	Roller				4	
H1-6-52	15159SR-4013	E-Ring (3@)			O	4	
H1-6-53	02023SC-7113	Hex. Socket Bolt (M4*L8)			O	4	
H1-6-54	02028SW-9115	Spring Washer (@4)			O	4	
H1-6-55	05009SW-1111	Washer(@4)				4	
H1-6-56	08400010B004	Main V-Rail Assy				4	
H1-6-57	AS-003759-00	Roller Bracket Assy	Nov,14,05 ~	X		4	

H1

H1-7

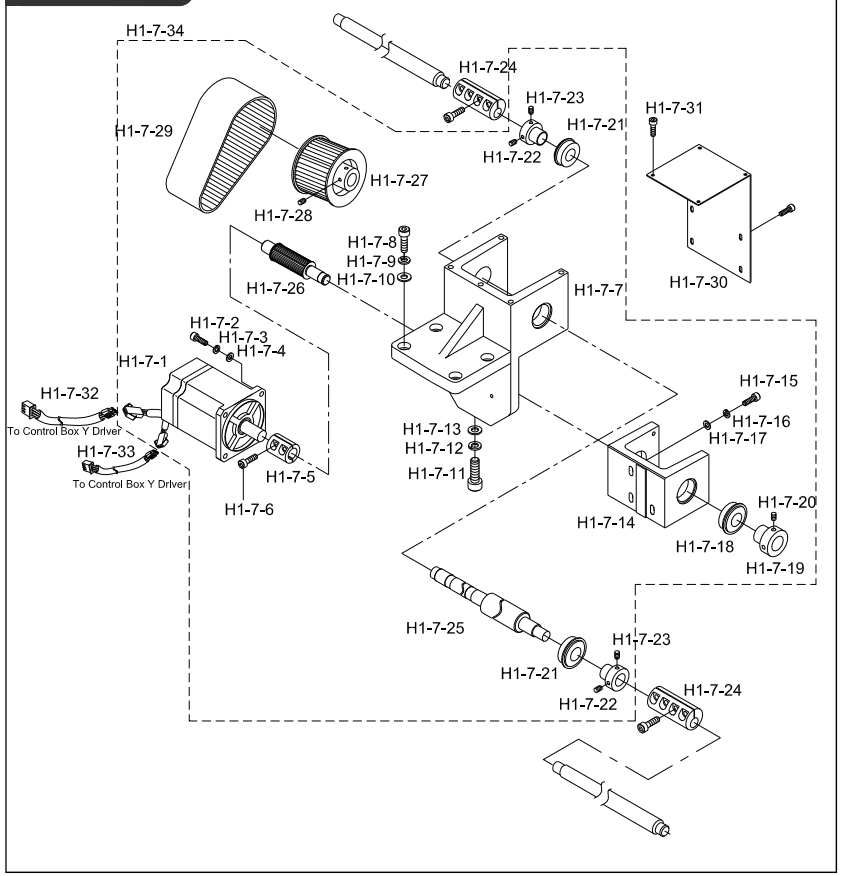

Note

Ref.No	Part No.	Part Name	Applied Period	Interchangeability	Hardware	Q'ty	Remark
H1-7-1	DMPD3-000002	Motor				1	
H1-7-2	08062SC-4113	Hex.Socket Bolt(M5*L20)			O	4	
H1-7-3	08070SW-9115	Spring Washer (@8)			O	4	
H1-7-4	18049SW-3111	Stud Bolt Washer(S) (@8)			O	4	
H1-7-5	GP-020301-00	Driving Shaft Coupling	Aug,11,06 ~ Aug,06,07	X		1	
	GP-020301-01		Aug,06,07 ~ Nov,13,08	△			
	GP-020301-02		Nov,13,08 ~	△			
H1-7-6	08091SC-7113	Hex.Socket Bolt(M6*L20)			O	2	
H1-7-7	04002200I000	Y-MOTER BASE				1	
H1-7-8	06025MC-7113	Hex.Socket Bolt(M6*L25)			O	4	
H1-7-9	15095SW-3115	Spring Washer (@8)			O	4	
H1-7-10	04029SW-A001	Stud Bolt Washer(S) (@8)			O	4	
H1-7-11	15019SC-4113	Hex. Socket Bolt (M8*L40)			O	1	
H1-7-12	15095SW-3115	Spring Washer (@8)			O	1	
H1-7-13	04029SW-A001	Stud Bolt Washer(S) (@8)			O	1	
H1-7-14	GP-020304-00	Y-Motor Bracket	Aug,11,06 ~	X		1	
H1-7-15	06025MC-7113	Hex.Socket Bolt(M6*L25)			O	3	
H1-7-16	15095SW-3115	Spring Washer (@8)			O	3	
H1-7-17	04029SW-A001	Stud Bolt Washer(S) (@8)			O	3	
H1-7-18	02-009A-8180	BALL BEARING 6004NR				1	
H1-7-19	04003500B000	Needle Bearing Collar				1	
H1-7-20	14060AF-4517	Hex.Socket Set Screw(M5*L5)			O	2	
H1-7-21	02-009A-8180	Ball Bearing 6004NR			O	2	
H1-7-22	03005210H000	Collar "A"				2	
H1-7-23	14060AF-4517	Hex.Socket Screw(M6*L6)			O	4	
H1-7-24	03006720HDK0	Coupling(@20)				2	
H1-7-25	04200200I000	Y-Driving Pulley Shaft				1	
H1-7-26	GP-020300-00	Y-Axis Timing Pulley	Aug,11,06 ~	X		1	
H1-7-27	04100330I000	Timing PULLEY(72-S5M-050)				1	
H1-7-28	14061AF-4517	Hex.Socket Screw(M8*L8)			O	8	
H1-7-29	04100410I000	Timing BELT (50-S5M-475)				1	
H1-7-30	12002000I000	Y-Axis Servo Motor Cover A				1	
H1-7-31	18033SC-3123	Truss Screw (M5*L6)			O	8	
H1-7-32	CA-001055-00	Y-Motor To Control Box Y Driver Cable	Mar,03,06 ~	X		1	
H1-7-33	CA-001056-00	Y-Motor Encoder To Y Driver Cable	Mar,03,06 ~	X		1	
H1-7-34	AS-008193-00	Y-Motor – Base	Feb,04,08 ~	X		1	
	AS-008193-01		Mar,09,09 ~	△			

X-Y Axis Drive System (Y-Stroke 1200 Above)

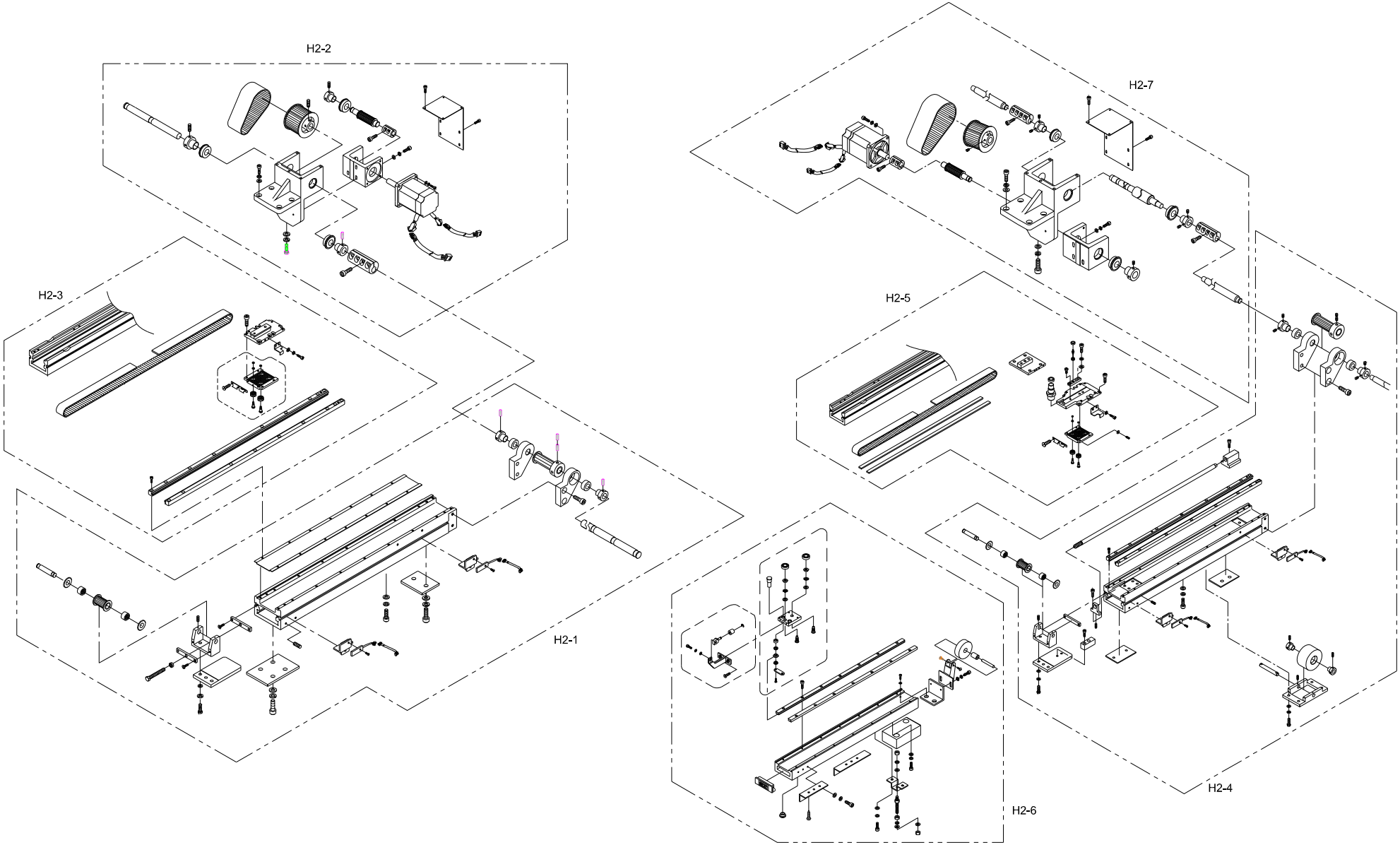

H2-1

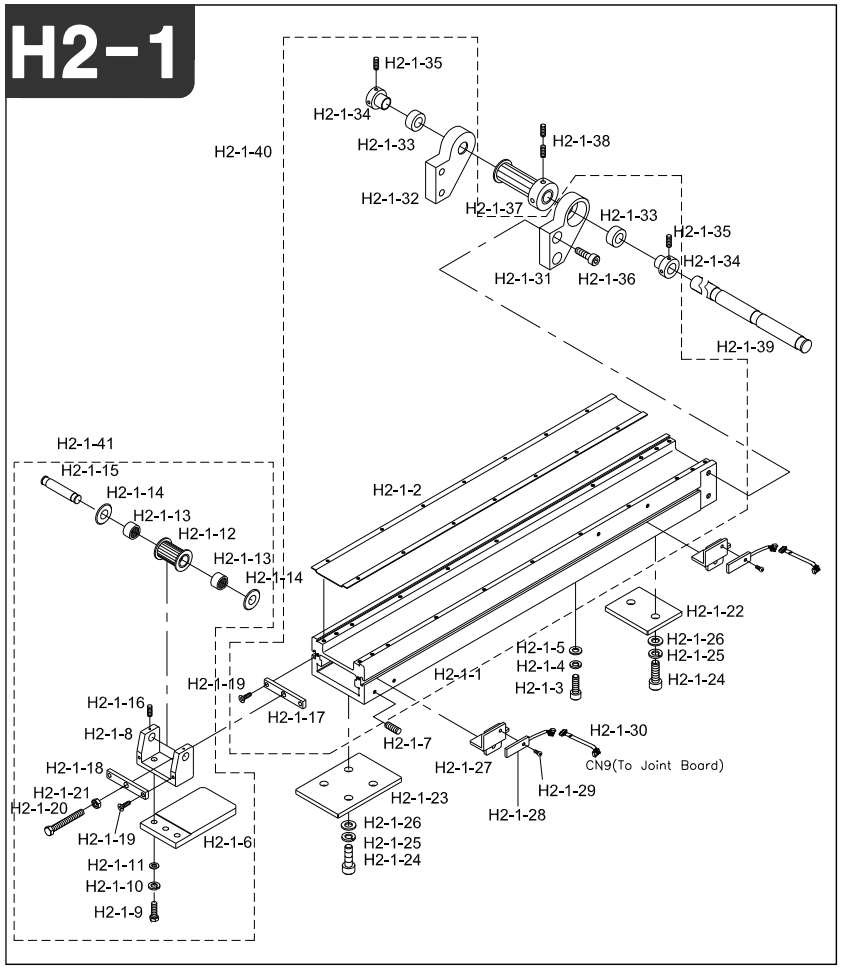

Note

Ref.No	Part No.	Part Name	Applied Period	Interchangeability	Hardware	Q'ty	Remark
H2-1-1	04100100ID00	X Axis Frame				3	
H2-1-2	04105100B000	X BELT CATCHER PLATE (B)				3	
H2-1-3	15017SC-4113	Hex. Socket Bolt (M8*L45)			O	12	
	15019SC-4113	Hex. Socket Bolt (M8*L40)			O	12	
H2-1-4	15095SW-3115	Spring Washer (@8)			O	12	
H2-1-5	04029SW-A001	Stud Bolt Washer (@8)			O	12	
H2-1-6	04202400B000	Timing Pulley Tension Base				3	
H2-1-7	15090SC-B001	Hex.Socket Set Screw (M6*L10)			O	6	
H2-1-8	15027DC-A001	Timing Pulley Bracket (W)				3	
H2-1-9	15028SC-1111	Hex. Bolt (M6*L20)			O	6	
H2-1-10	03026SW-9115	Spring Washer (@6)			O	6	
H2-1-11	08057SW-1111	Washer (@6)			O	6	
H2-1-12	04600100B000	TIMING PULLEY D(18-S5M-32F)				3	
H2-1-13	15042BR-A001	Needle Bearing (1210zz)			O	6	
H2-1-14	15046RB-A001	Driving Pin Washer				6	
H2-1-15	04104400B000	Timing Pulley Driving Pin "B"				3	
H2-1-16	03022SC-4517	Hex.Socket Screw (M4*L5)			O	6	
H2-1-17	15055PR-A001	Tension Rivet Plate (W)				3	
H2-1-18	15056PR-A001	Tension Plate (W)				3	
H2-1-19	15089SC-7119	C.S SCREW (M4*L10)			O	12	
H2-1-20	15058SC-1211	Hex. Bolt (M6*L58)			O	3	
H2-1-21	14064SN-7311	HEX.NUT (M6-NO3)			O	3	
H2-1-22	04000100H000	X-Lm Guide Support Plate (A)				3	
H2-1-23	04000200H000	X-Lm Guide Support Plate (B)				3	
H2-1-24	15020SC-4113	Hex,Socket Bolt (M8*L50)			O	18	
H2-1-25	15095SW-3115	Spring Washer (@8)			O	18	
H2-1-26	04029SW-A001	Stud Bolt Washer(S) (@8)			O	18	
H2-1-27	GP-008025-00	Sensor Bracket X,Y	Mar,17,05 ~	X		2	
H2-1-28	EP-000067-00	X-Sensor	Dec,05,05 ~	X		2	
H2-1-29	02023SC-7113	Position Adjusting Screw				4	
H2-1-30	CA-000324-00	X-Sensor To Joint Board	Jul,16,05 ~	X		1	
H2-1-31	04000650I000	TIMING PULLEY BRACKET (L)				3	
H2-1-32	04000660I000	TIMING PULLEY BRACKET (R)				3	
H2-1-33	04000630I000	BEARING (6905ZZ)			O	6	
H2-1-34	04003500I000	NEEDLE BEARING COLLAR				6	
H2-1-35	14060AF-4517	HEX.SOCKET SCREW(M6*L6)			O	12	
H2-1-36	14002SC-7113	Hex.Socket Set Screw(M6*L15)			O	12	

H2-1

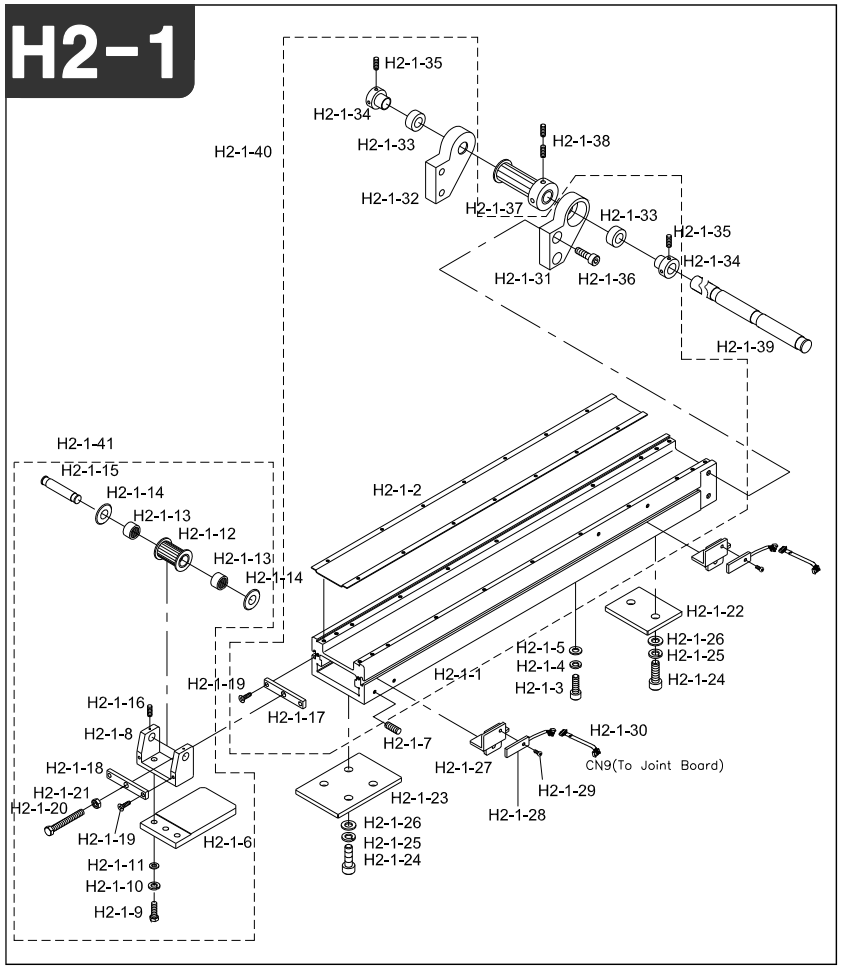

Note

Ref.No	Part No.	Part Name	Applied Period	Interchangeability	Hardware	Q'ty	Remark
H2-1-37	04000400B000	X-TIMING PULLEY (S5M)				3	
H2-1-38	14060AF-4517	Hex.Socket Screw(M6*L6)			O	12	
H2-1-39	04100200H000	X-Driving Pulley Shaft				6	
H2-1-40	04200000I00I	Y-Cam Roller Plate Assy				4	
H2-1-41	AS-008813-00	Bracket Fixed Plate D Assy	Jun,30,08 ~	X		4	

H2

H2-2

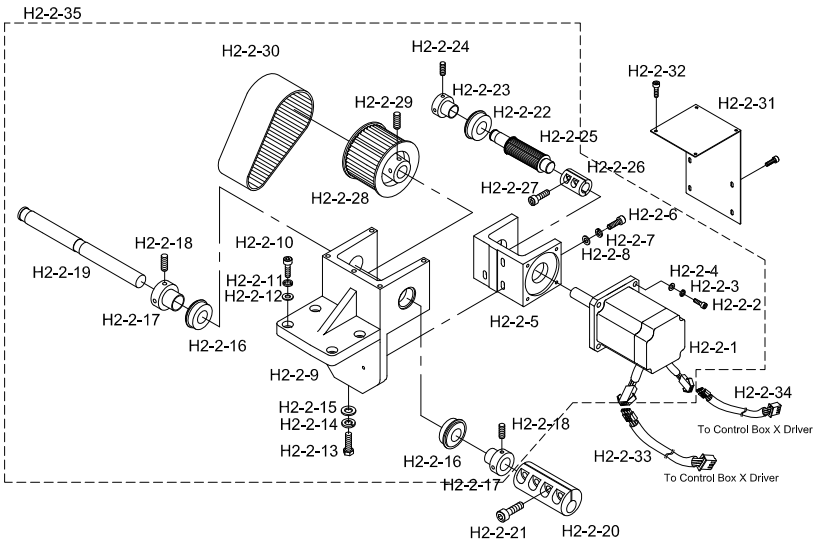

Note

Ref.No	Part No.	Part Name	Applied Period	Interchangeability	Hardware	Q'ty	Remark
H2-2-1	DMPD3-000002	X-Y Motor (P20B10100Dxs)				1	
H2-2-2	08062SC-4113	Hex.Socket Bolt(M5*L20)			O	4	
H2-2-3	08070SW-9115	Spring Washer (@8)			O	4	
H2-2-4	18049SW-3111	Stud Bolt Washer(S) (@8)			O	4	
H2-2-5	GP-020302-00	X-Motor Bracket	Aug,11,06 ~	X		1	
H2-2-6	08087SC-7113	Hex.Socket Bolt(M8*L25)			O	3	
H2-2-7	15095SW-3115	Spring Washer (@8)			O	3	
H2-2-8	04029SW-A001	Stud Bolt Washer(S) (@8)			O	3	
H2-2-9	04001800I000	X Motor Base				1	
H2-2-10	08087SC-7113	Hex.Socket Bolt(M8*L25)			O	4	
H2-2-11	15095SW-3115	Spring Washer (@8)			O	4	
H2-2-12	04029SW-A001	Stud Bolt Washer(S) (@8)			O	4	
H2-2-13	15019SC-4113	Hex. Socket Bolt (M8*L40)			O	1	
H2-2-14	15095SW-3115	Spring Washer (@8)			O	1	
H2-2-15	04029SW-A001	Stud Bolt Washer(S) (@8)			O	1	
H2-2-16	02-009A-8180	Ball Bearing (6004NR)			O	2	
H2-2-17	03005210H000	COLLAR "A"				2	
H2-2-18	14060AF-4517	Hex.Socket Screw(M6*L6)			O	4	
H2-2-19	04001000I004	X Driving Pulley Shaft				1	
H2-2-20	GP-044599-00	COUPLING @20	Dec,23,08 ~	X		3	
H2-2-21	03016SC-4113	Screw			O	12	
H2-2-22	02-009A-8180	Ball Bearing (6004NR)			O	1	
H2-2-23	04003500B000	Bearing Stopper Collar "A"				1	
H2-2-24	14060AF-4517	Hex.Socket Screw(M6*L6)				2	
H2-2-25	PL-000054-00	X-Y Driving Shaft Timing Pulley	Jul,05,10 ~			1	
H2-2-26	04001700H000	Driving Shaft Coupling				1	
H2-2-27	GP-020301-00	Hex.Socket Bolt(M6*L20)	Aug,11,06 ~ Aug,06,07	X	O	2	
	GP-020301-01		Aug,06,07 ~ Nov,13,08	△			
	GP-020301-02		Nov,13,08 ~	△			
H2-2-28	04100330I000	Timing PULLEY(72-S5M-050)				1	
H2-2-29	14061AF-4517	Hex.Socket Screw(M8*L8)			O	8	
H2-2-30	04100410I000	Timing BELT (50-S5M-475)				1	
H2-2-31	12002000I000	X-Y Axis Servo Motor Cover				1	
H2-2-32	18033SC-3123	Truss Screw (M5*L6)			O	8	
H2-2-33	CA-001053-00	X-Motor To Control Box X-Driver Cable	Mar,03,06 ~	X		1	
H2-2-34	CA-001054-00	X-Motor To Encoder Cable To X-Driver Cable	Mar,03,06 ~	X		1	
H2-2-35	AS-008636-00	Y-Motor Base Assy	May,14,08 ~	X		1	

H2-3

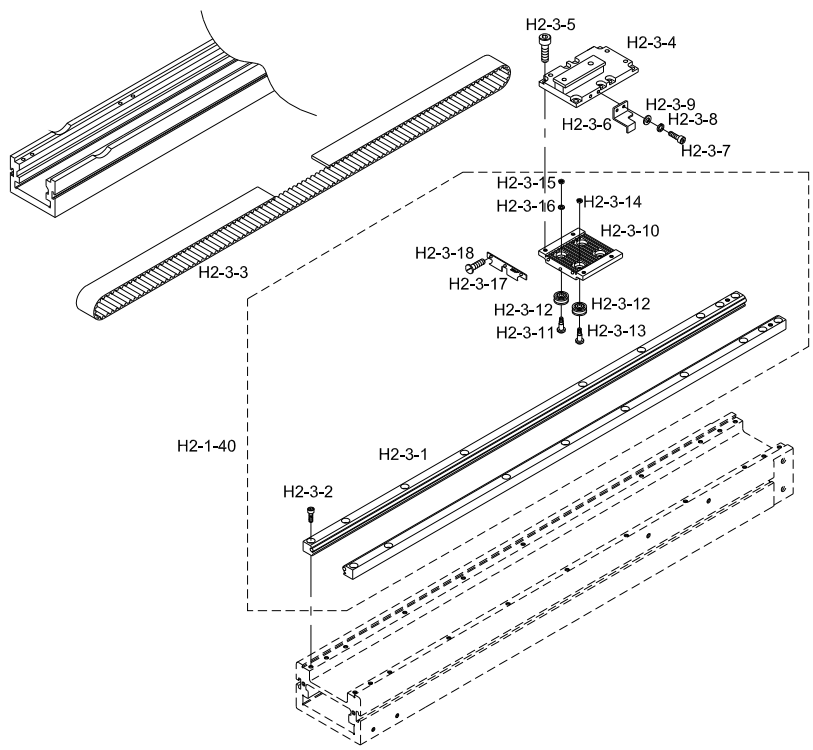

Note

Ref.No	Part No.	Part Name	Applied Period	Interchangeability	Hardware	Q'ty	Remark
H2-3-1	15037AD-BC11	X-Lm Guide Rail				6	
H2-3-2	04016MC-4113	CAM ROLLER GUIDE FIXED SCREW				36	
H2-3-3	15043BT-A101	BELT				3	
H2-3-4	04000500I000	X Moving Plate				3	
H2-3-5	02023SC-7113	Hex.Socket Bolt(M4*L12)			O	24	
H2-3-6	04000700F000	Sensor Perception Plate X,Y				1	
H2-3-7	22006SC-7113	Hex. Socket Bolt (M3*L8)			O	2	
H2-3-8	11019SW-9115	Spring Washer (3@)			O	2	
H2-3-9	06011SW-2111	Washer (@3)			O	2	
H2-3-10	04105100B000	X BELT CATCHER PLATE (B)				3	
H2-3-11	15002CW-B001	Cam Roller Stud (A)				6	
H2-3-12	15001BR-B001	Cam Roller Baearing				12	
H2-3-13	15003CW-B001	Cam Roller Stud (B)				6	
H2-3-14	18048SW-3115	Spring Washer (5@)			O	6	
H2-3-15	18015SW-3111	Washer (4@-S)			O	6	
H2-3-16	18014SW-3115	Spring Washer (@4-No2)			O	6	
H2-3-17	04000200B000	CAM ROLLER END SEAL B				6	
H2-3-18	03065SC-A001	GUARD PLATE SCREW				18	

H2

H2-4

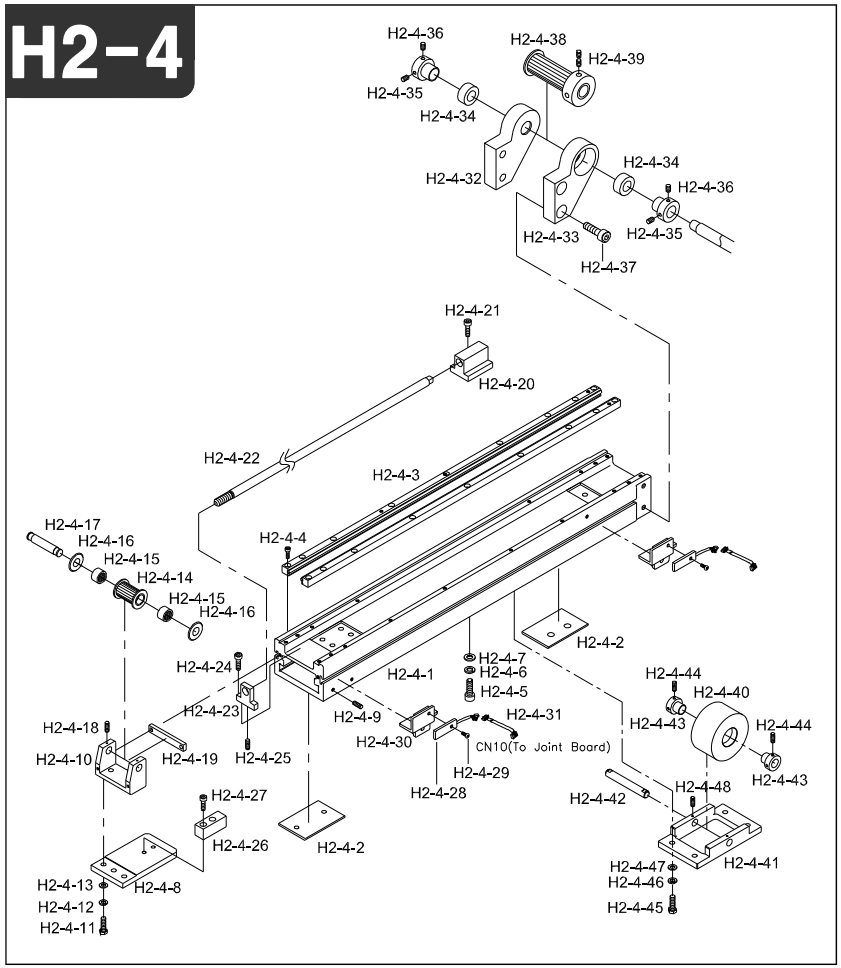

Note

Ref.No	Part No.	Part Name	Applied Period	Interchangeability	Hardware	Q'ty	Remark
H2-4-1	04200100I004	Y-Axis Frame L=638				4	
H2-4-2	15112PR-A001	L/M Guide Plate "A-2"				12	
H2-4-3	15030AD-B021	Y Cam Roller Guide Rail L=633				8	
H2-4-4	04016MC-4113	Cam Roller Guide Fixed Screw				8	
H2-4-5	15017SC-4113	Hex. Socket Bolt (M8*L45)			O	16	
	15019SC-4113	Hex. Socket Bolt (M8*L40)			O	16	
H2-4-6	15095SW-3115	SPRING WASHER (@8)			O	16	
H2-4-7	04029SW-A001	Stud Bolt Washer (@8)			O	16	
H2-4-8	04302300B000	Timing Pulley Tension Base(N) (Belt:35)				2	
	04202400B000	Timing Pulley Tension Base				4	
H2-4-9	15090SC-B001	Hex.Socket Set Screw (M6*L10)			O	8	
H2-4-10	15026DC-A001	Timing Pulley Tension Bracket (N)				2	
	15027DC-A001	Timing Pulley Bracket (W)				4	
H2-4-11	15028SC-1111	Hex. Bolt (M6*L20)			O	21	
H2-4-12	03026SW-9115	Spring Washer (@6)			O	18	
H2-4-13	08057SW-1111	Washer (@6)			O	18	
H2-4-14	04500200B000	TIMING ULLEY B(18-S5M-32F)				2	
	04600100B000	TIMING PULLEY D(18-S5M-32F)				4	
H2-4-15	15042BR-A001	Needle Bearing (1210zz)			O	12	
H2-4-16	15046RB-A001	Driving Pin Washer				12	
H2-4-17	04104300B000	Timing Pulley Driving Pin "A" (Belt:35)				2	
	04104400B000	Timing Pulley Driving Pin "B" (Belt:48)				4	
H2-4-18	03022SC-4517	Hex.Socket Screw (M4*L5)			O	12	
H2-4-19	15055PR-A001	Tension Rivet Plate (W)				2	
H2-4-20	04200500B000	Y Adjusting Shaft Guide (B)				6	
H2-4-21	16059SC-7113	HEX.SOCKET BOLT (M6*L12)			O	24	
H2-4-22	04000900B009	Y-Adjusting Shaft				6	
H2-4-23	04200400B000	Y Adjusting Shaft Guide (A)				6	
H2-4-24	16059SC-7113	Hex.Socket Bolt (M6*L12)			O	12	
H2-4-25	14061AF-4517	Hex.Socket Set Screw (M8*L8)			O	6	
H2-4-26	04200600B000	Adjusting Shaft Stopper				4	
H2-4-27	14006SC-7113	HEX.SOCKET SET SCREW(M8*L15)			O	12	
H2-4-28	EP-000067-00	Xy-Sensor Ass'Y	Dec,05,05 ~	X		2	
H2-4-29	EP-008035-00	Perception Sensor Bracket X,Y				2	
H2-4-30	02023SC-7113	Plus Screw (M3*L8)			O	4	
H2-4-31	CA-000325-00	Y-Sensor To Joint Board Cable	Jul,16,05 ~	X		1	
H2-4-32	04000650I000	TIMING PULLEY BRACKET (L)				4	

H2-4

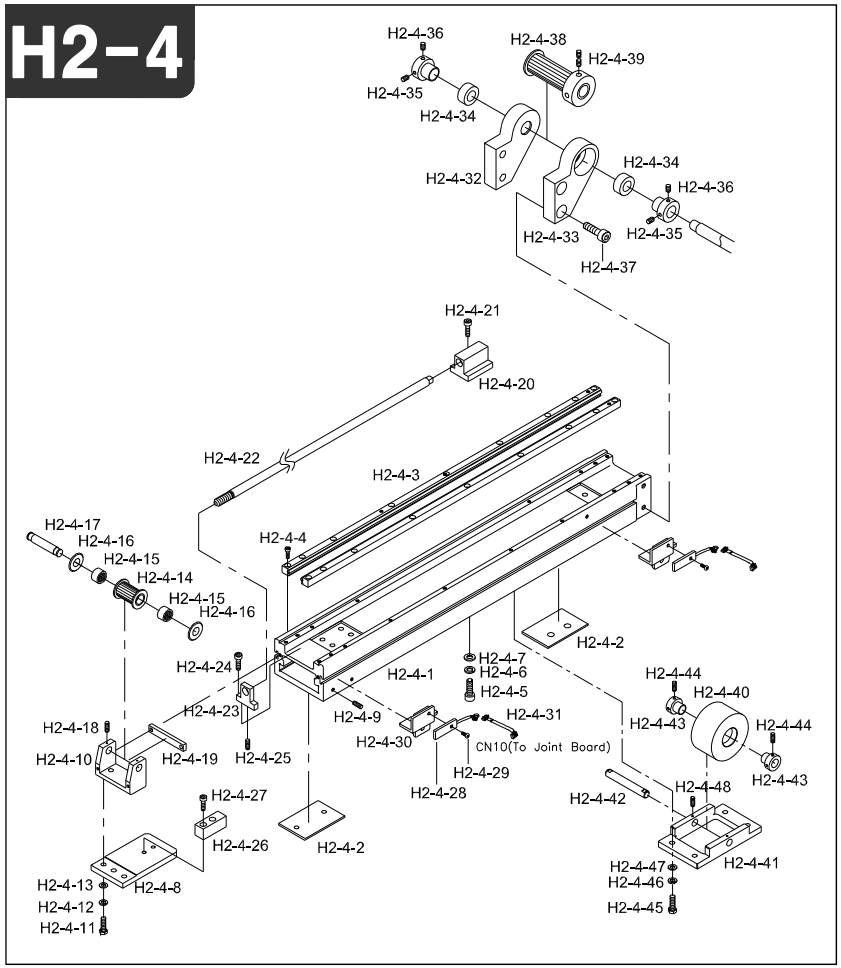

Note

Ref.No	Part No.	Part Name	Applied Period	Interchangeability	Hardware	Q'ty	Remark
H2-4-33	04000660I000	TIMING PULLEY BRACKET (R)				4	
H2-4-34	04000630I000	Needle Bearing (Nk18/16A)			O	8	
H2-4-35	04003500I000	NEEDLE BEARING COLLAR				8	
H2-4-36	14060AF-4517	HEX.SOCKET SCREW(M6*L6)			O	16	
H2-4-37	14002SC-7113	Hex.Socket Bolt (M6*L15)			O	16	
H2-4-38	04000400B000	X-TIMING PULLEY (S5M)				4	
H2-4-39	14060AF-4517	Hex.Socket Screw(M6*L6)			O	16	
H2-4-40	04001700B009	Idler (A)				4	
	04002100B009	Idler (B)				2	
H2-4-41	04001900B009	Idler Base (A)				4	
	04002000B009	Idler Base (B)				2	
H2-4-42	04001800B009	Idler Shaft (A)				4	
	04002000B009	Idler Shaft (B)				2	
H2-4-43	03002700T000	Bearing Collar				12	
H2-4-44	03016SC-4113	Hex. Socket Bolt (M5*L15)			O	8	
H2-4-45	18014SC-7113	Hex. Socket Bolt (M4*L9)			O	12	
H2-4-46	03026SW-9115	Spring Washer (@6)			O	24	
H2-4-47	08057SW-1111	Washer (@6)			O	24	
H2-4-48	14046SC-7113	Hex. Socket Bolt (M6*L30)			O	24	

H2

H2-5

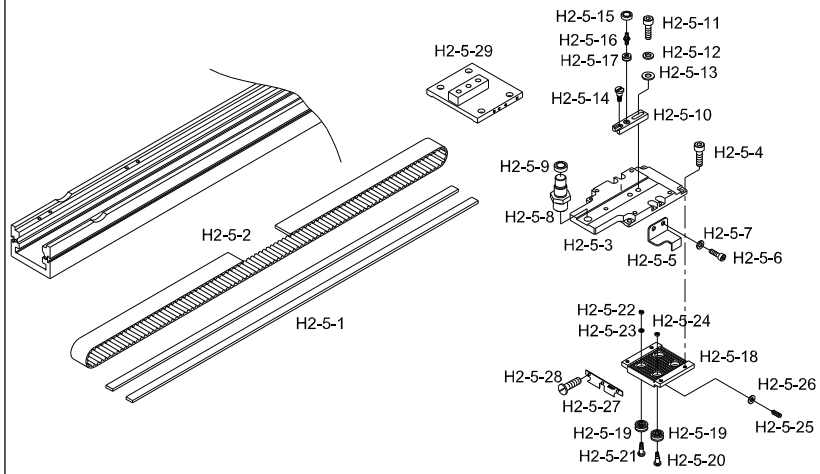

Note

Ref.No	Part No.	Part Name	Applied Period	Interchangeability	Hardware	Q'ty	Remark
H2-5-1	18062SF-A001	Y-Axis Sash (L) Felt				8	
H2-5-2	04000700B009	Y-Drive Timing Belt "A"				2	
	04000800B009	Y-Drive Timing Belt "B				4	
H2-5-3	04000900I000	Y-Axis Bearing Block(Rear)				4	
H2-5-4	15067SC-A001	Hex.Socket Bolt (M4*L7)			O	32	
H2-5-5	04000800H000	Sensor Plate"C"				4	
H2-5-6	22006SC-7113	Hex.Socket Bolt(M3*L8)			O	4	
H2-5-7	11019SW-9115	Spring Washer(@3)			O	4	
H2-5-8	15098CW-A001	Rail Guide Pin"B"				4	
H2-5-9	15077BR-B001	Ball Bearing(Lr606Nppu)			O	8	
H2-5-10	GP-006299-00	ADJUSTING BLOCK FOR BEARING	Dec,18,04 ~	X		4	
H2-5-11	03016SC-4113	Hex. Socket Bolt (M5*L15)			O	8	
H2-5-12	18048SW-3115	SPRING WASHER (5@)			O	8	
H2-5-13	WS-000083-00	@5 - Washer	Dec,20,04 ~	X	O	8	
H2-5-14	15074SC-A001	Stopper Stud				4	
H2-5-15	15077BR-B001	Ball Bearing (Lr606Nppu)			O	8	
H2-5-16	15098CW-A001	Rail Guide Pin "B"				4	
H2-5-17	18111CW-B001	Frame "E" Roller				4	
H2-5-18	04304900B000	BELT CATCHER PLATE (A)				2	
	04205000B000	BELT CATCHER PLATE (B)				4	
H2-5-19	15001BR-B001	Cam Roller Bearing			O	24	
H2-5-20	15003CW-B001	Cam Roller Stud (B)				12	
H2-5-21	15002CW-B001	Cam Roller Stud (A)				12	
H2-5-22	16018SW-1111	Washer (@5)			O	24	
H2-5-23	18048SW-3115	Spring Washer (@5)			O	24	
H2-5-24	18015SW-3111	Washer (4@-S)			O	24	
H2-5-25	07035SC-7113	Bracket Screw (M3*L6)			O	2	
H2-5-26	06011SW-2111	Washer (@3)			O	1	
H2-5-27	04000100B000	Cam Roller End Seal "A"				4	
	04000200B000	Cam Roller End Seal "B"				3	
H2-5-28	03065SC-A001	Guard Plate Screw				36	
H2-5-29	04202400B000	Y-Axis Feed Plate				4	

H2-6

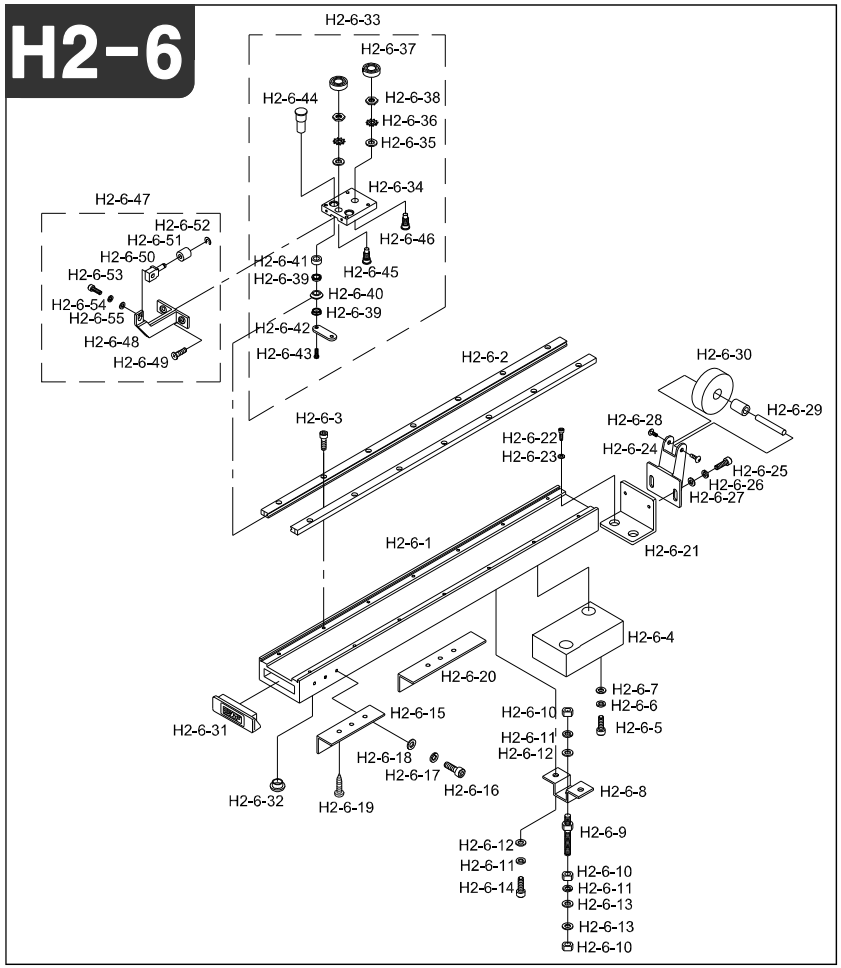

Note

Ref.No	Part No.	Part Name	Applied Period	Interchangeability	Hardware	Q'ty	Remark
H2-6-1	08000200B009	V-Rail Bracket				4	
H2-6-2	08000100B009	Y-Axis Rail Guide				8	
H2-6-3	02015SC-7113	HEX.SOCKET BOLT(M4*L10)			O	112	
H2-6-4	15095AD-B001	Spacer				4	
H2-6-5	15020SC-4113	Hex. Socket Bolt (M8X150)			O	8	
H2-6-6	15095SW-3115	SPRING WASHER (@8)			O	8	
H2-6-7	08041SW-1111	Washer (@8-S)			O	8	
H2-6-8	15097PR-B001	Stud Bracket				4	
H2-6-9	15096CW-B001	Stud Bolt				4	
H2-6-10	04032SN-A001	Hex. Nut (M8)			O	4	
H2-6-11	15095SW-3115	SPRING WASHER (@8)			O	4	
H2-6-12	08041SW-1111	Washer (@8-S)			O	4	
H2-6-13	04029SW-A001	Stud Bolt Washer (@8)			O	4	
H2-6-14	14006SC-7113	Hex.Socket Set Screw(M8*L15)			O	12	
H2-6-15	15093AD-B001	Table Support				16	
H2-6-16	18047SC-7113	Hex. Socket Bolt (M5*L15)			O	72	
H2-6-17	18048SW-3115	Spring Washer (5@)			O	72	
H2-6-18	18049SW-3111	Washer (@5)			O	72	
H2-6-19	16010SC-8330	Tapping Screw (M6*L25)			O	72	
H2-6-20	15094AD-B001	Table Support(B)				8	
H2-6-21	GP-013196-00	ROLLER BRACKET SUPPORT	Nov,10,05 ~	X		4	
H2-6-22	14006SC-4113	Hex. Socket Bolt (M8*L15)			O	8	
H2-6-23	15077SW-2111	Washer (@8)			O	8	
H2-6-24	GP-006914-00	Roller Bracket	Jan,12,05 ~ Jun,02,05			4	
	GP-006914-01		Jun,02,05 ~ May,03,06				
	GP-006914-02		May,03,06 ~				
H2-6-25	02023SC-7113	Hex. Socket Bolt (M4*L8)			O	8	
H2-6-26	02028SW-9115	Spring Washer (@4)			O	8	
H2-6-27	05009SW-1111	Washer(@4)			O	8	
H2-6-28	09005SC-3123	Truss Screw (M3*L6)			O	8	
H2-6-29	PN-000133-00	Roller Pin	Jan,12,05 ~	X		4	
H2-6-30	GP-006917-00	Guide Roller	Jan,12,05 ~ Jun,02,05	X		4	
	GP-006917-01		Jun,02,05 ~	△			
H2-6-31	15092RB-B001	Rubber Cap (A)				4	
H2-6-32	15091RB-A001	Rubber Cap (B)				4	
H2-6-33	15071BM-A001	V-Roller Guide Set				4	
H2-6-34	08400010B000	Y-Axis Feed Plate "D"				4	

H2-6

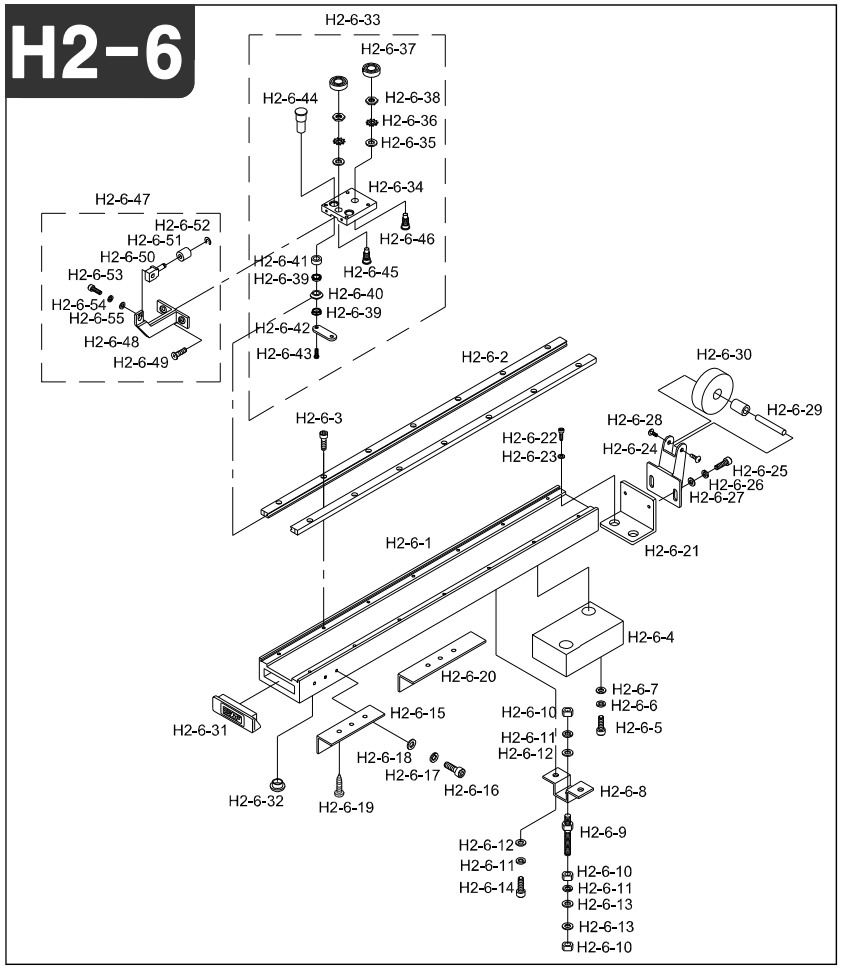

Note

Ref.No	Part No.	Part Name	Applied Period	Interchangeability	Hardware	Q'ty	Remark
H2-6-35	15077SW-2111	Washer (@8)			O	8	
H2-6-36	15078SW-8113	Tooghed Lock Washer (@8)			O	8	
H2-6-37	15077BR-B001	Ball Bearing (Lr606Nppu)			O	8	
H2-6-38	15079SN-2311	Rail Guide Shaft Nut				8	
H2-6-39	15106BR-A001	Flange Bearing (1280Zz)			O	16	
H2-6-40	15130AF-A001	Roller Guide				8	
H2-6-41	15092CW-A031	Stopper Washer				8	
H2-6-42	15137PR-A001	Rail Guide Shaft Bracket				4	
H2-6-43	05028SC-A001	Holder Screw				8	
H2-6-44	15076CW-A031	Rail Guide Pin "C' (L19.1)				4	
H2-6-45	15074CW-B001	Rail Guide Pin "A"				4	
H2-6-46	15075CW-B001	Rail Guide Pin "B"				4	
H2-6-47	15134BM-B001	Roller Bracket Ass'Y				4	
H2-6-48	08000700B000	Bracket				4	
H2-6-49	02002SC-7119	Pluss Screw (M4*L8)			O	8	
H2-6-50	10507400B000	Roller Position Adjusting Pin				4	
H2-6-51	15133CW-B001	Roller				4	
H2-6-52	15159SR-4013	E-Ring (3@)			O	4	
H2-6-53	02023SC-7113	Hex. Socket Bolt (M4*L8)			O	4	
H2-6-54	02028SW-9115	Spring Washer (@4)			O	4	
H2-6-55	05009SW-1111	Washer(@4)			O	4	

H2

H2-7

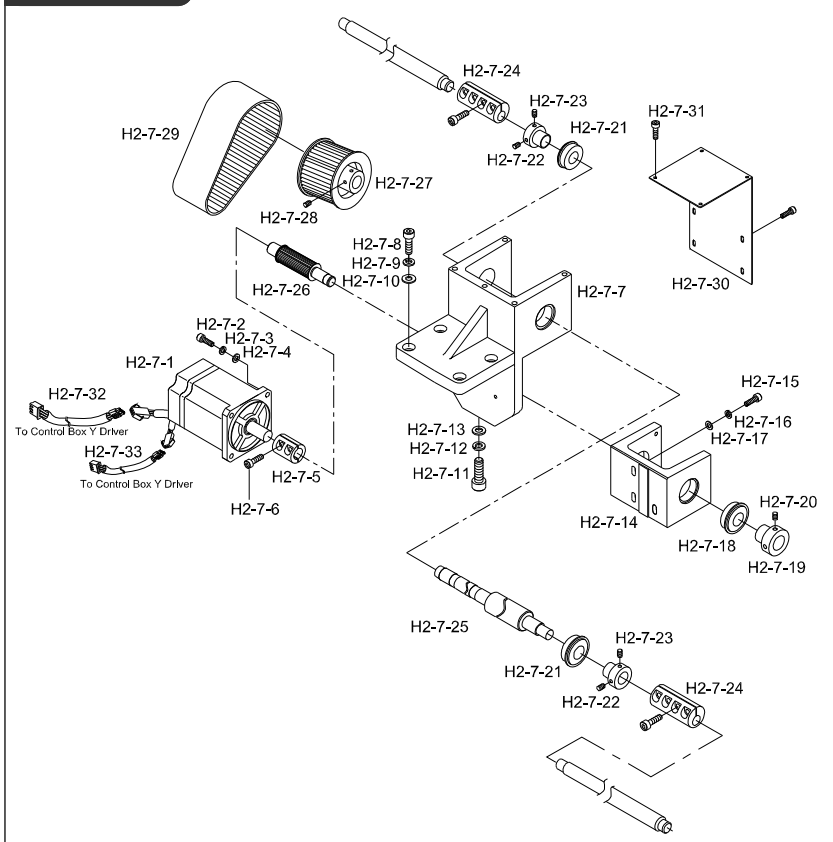

Note

Ref.No	Part No.	Part Name	Applied Period	Interchangeability	Hardware	Q'ty	Remark
H2-7-1	DMPD3-000002	Motor				1	
H2-7-2	08062SC-4113	Hex.Socket Bolt(M5*L20)				4	
H2-7-3	08070SW-9115	Spring Washer (@8)				4	
H2-7-4	18049SW-3111	Stud Bolt Washer(S) (@8)				4	
H2-7-5	GP-020301-00	Driving Shaft Coupling	Aug,11,06 ~ Aug,06,07	X		1	
	GP-020301-01		Aug,06,07 ~ Nov,13,08	△			
	GP-020301-02		Nov,13,08 ~	△			
H2-7-6	08091SC-7113	Hex.Socket Bolt(M6*L20)				2	
H2-7-7	04002200I000	Y-MOTER BASE				1	
H2-7-8	06025MC-7113	Hex.Socket Bolt(M6*L25)				4	
H2-7-9	15095SW-3115	Spring Washer (@8)				4	
H2-7-10	04029SW-A001	Stud Bolt Washer(S) (@8)				4	
H2-7-11	15019SC-4113	Hex. Socket Bolt (M8*L40)				1	
H2-7-12	15095SW-3115	Spring Washer (@8)				1	
H2-7-13	04029SW-A001	Stud Bolt Washer(S) (@8)				1	
H2-7-14	GP-020304-00	Y-Motor Bracket	Aug,11,06 ~	X		1	
H2-7-15	06025MC-7113	Hex.Socket Bolt(M6*L25)				3	
H2-7-16	15095SW-3115	Spring Washer (@8)				3	
H2-7-17	04029SW-A001	Stud Bolt Washer(S) (@8)				3	
H2-7-18	02-009A-8180	BALL BEARING 6004NR				1	
H2-7-19	04003500B000	Needle Bearing Collar				1	
H2-7-20	14060AF-4517	Hex.Socket Set Screw(M5*L5)				2	
H2-7-21	02-009A-8180	Ball Bearing 6004NR				2	
H2-7-22	03005210H000	Collar "A"				2	
H2-7-23	14060AF-4517	Hex.Socket Screw(M6*L6)				4	
H2-7-24	03006720HDKO	Coupling(@20)				1	
H2-7-25	04200200I000	Y-Driving Pulley Shaft				1	
H2-7-26	GP-020300-00	Y-Axis Timing Pulley	Aug,11,06 ~	X		1	
H2-7-27	04100330I000	Timing PULLEY(72-S5M-050)				1	
H2-7-28	14061AF-4517	Hex.Socket Screw(M8*L8)				8	
H2-7-29	04100410I000	Timing BELT (50-S5M-475)				1	
H2-7-30	12002000I000	Y-Axis Servo Motor Cover A				1	
H2-7-31	18033SC-3123	Truss Screw (M5*L6)				8	
H2-7-32	CA-001055-00	Y-Motor To Control Box Y Driver Cable	Mar,03,06 ~	X		1	
H2-7-33	CA-001056-00	Y-Motor Encoder To Y Driver Cable	Mar,03,06 ~	X		1	

Setting

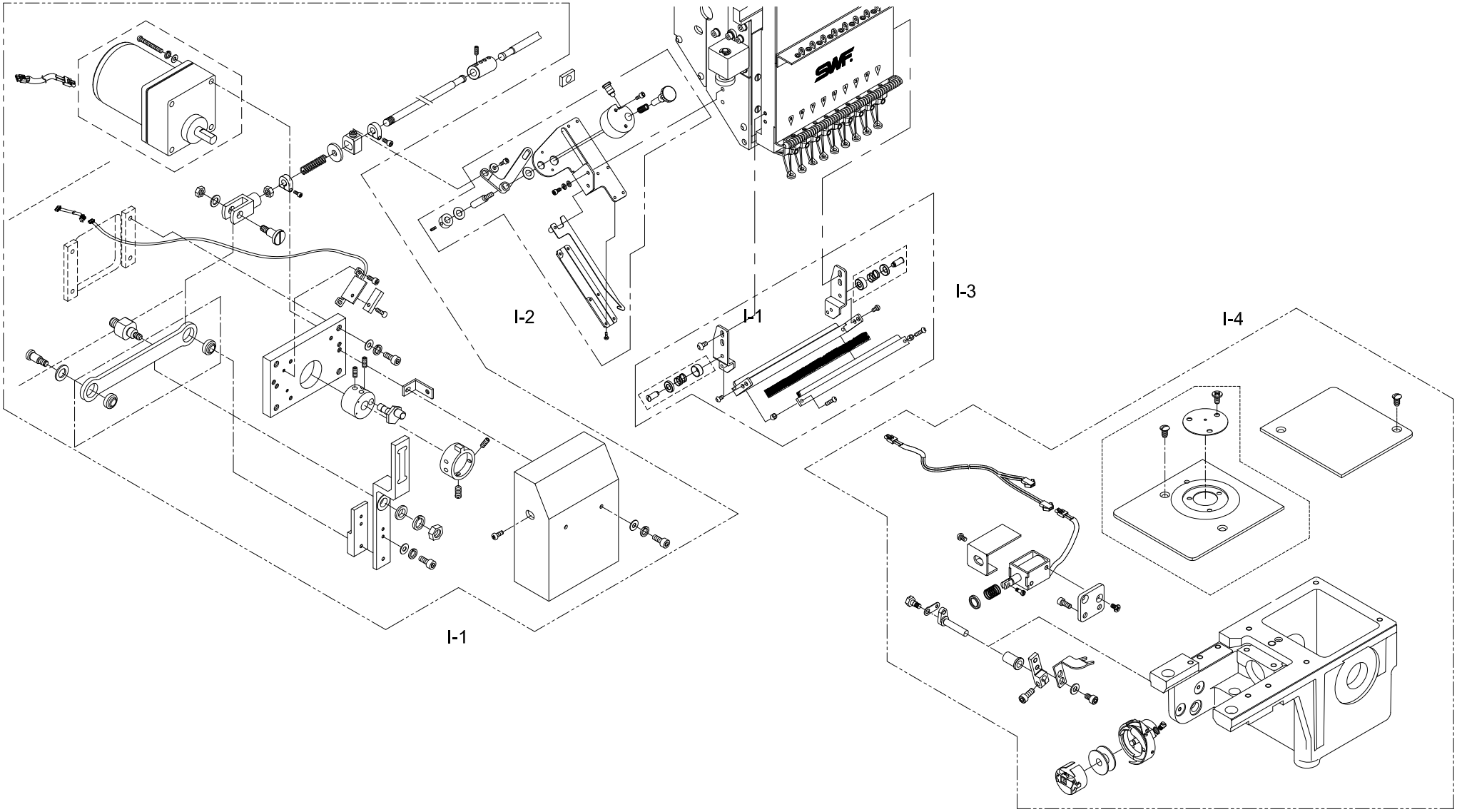

I-1

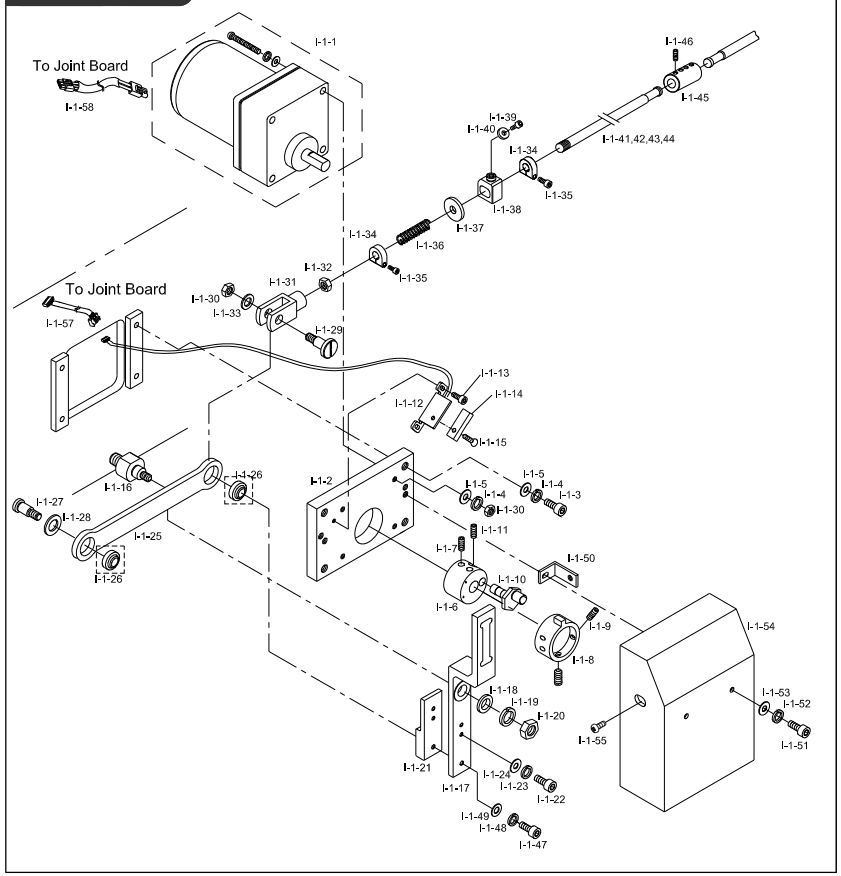

Note

Ref.No	Part No.	Part Name	Applied Period	Interchangeability	Hardware	Q'ty	Remark
I-1-1	03003100H000	Upper Thread Hook Motor Unit				1	
I-1-2	GP-046540-00	MOTOR BASE	Jun,09,09 ~ Jul,08,10	X		1	
	GP-046540-01		Jul,08,10 ~	△			
I-1-3	06025MC-7113	Hex. Socket Bolt (M6*L25)			O	4	
I-1-4	16014SW-4115	Spring Washer (@8)			O	4	
I-1-5	08057SW-1111	Washer (@6)			O	4	
I-1-6	03003300H000	Cam Shaft Fixing Block				1	
I-1-7	05008MC-4517	Hex. Socket Bolt (M5*L8)			O	2	
I-1-8	GP-005184-00	SENSOR SENSING ADJUSTING RING	Oct,14,04 ~ May,19,05	X		1	
	GP-005184-01		May,19,05 ~	△			
I-1-9	04014SC-4517	Hex.Socket Set Screw(M5*L5)			O	2	
I-1-10	03003500H000	Motor Driving Cam Shaft				1	
I-1-11	04014SC-4517	Hex.Socket Set Screw(M5*L5)			O	1	
I-1-12	GP-015085-00	UPPER THREAD HOOK SENSOR BASE	Oct,13,04 ~	X		1	
I-1-13	07035SC-7113	Bracket Screw (M3*L6)			O	2	
I-1-14	EP-000067-00	SENSOR				1	
I-1-15	13061SC-8119	Plus Screw (M3*L10)			O	1	
I-1-16	SC-001729-00	STUD BOLT FOR DRIVING PLATE	Jun,03,09 ~ Apr,20,10	X		1	
	SC-001729-01		Apr,20,10 ~ Jul,08,10	△			
	SC-001729-02		Jul,08,10 ~	△			
I-1-17	03003910H000	Upper Thread Driving Plate				1	
I-1-18	WS-000549-00	Stud Bolt Washer	Feb,20,09 ~ Jun,24,09	X		1	
	WS-000549-01		Jun,24,09 ~	△			
I-1-19	16014SW-4115	Spring Washer (@8)			O	1	
I-1-20	13042SN-1111	Hex. Nut (M6*T5-R)			O	1	
I-1-21	GP-021754-00	Driving Plate Block"C"	Sep,21,06 ~	X		1	
I-1-22	03016SC-4113	Hex. Socket Bolt (M5*L15)			O	2	
I-1-23	18048SW-3115	Spring Washer (@5)			O	2	
I-1-24	18049SW-3111	Washer (@5)			O	2	
I-1-25	GP-044787-00	MOTOR DRIVING CONNECT PLATE	Jan,13,09 ~	X		1	
I-1-26	03004400H000	Motor Driving Connect Bearing				2	
I-1-27	03008300H000	Connecting Plate Pin				1	
I-1-28	03004500H000	Connecting Plate Pin Washer				1	
I-1-29	SC-001605-00	Connecting Plate Stud Screw	Jan,13,09 ~	X		1	
I-1-30	13042SN-1111	Hex. Nut (M6*T5-R)			O	1	
I-1-31	03004800H000	Connecting Plate Knuckle				1	
I-1-32	04032SN-A001	Hex. Nut (M8)			O	1	
I-1-33	03026SW-9115	Spring Washer				1	
I-1-34	LWP-BK0003-00	Return Spring Stopper	Dec,28,10 ~	X		36	
	LWP-BK0003-01		Jul,01,11 ~	△			
I-1-35	05008SC-4113	Hex. Socket Bolt (M4*L16)			O	36	
I-1-36	03002700H000	Return Spring				18	

I-1

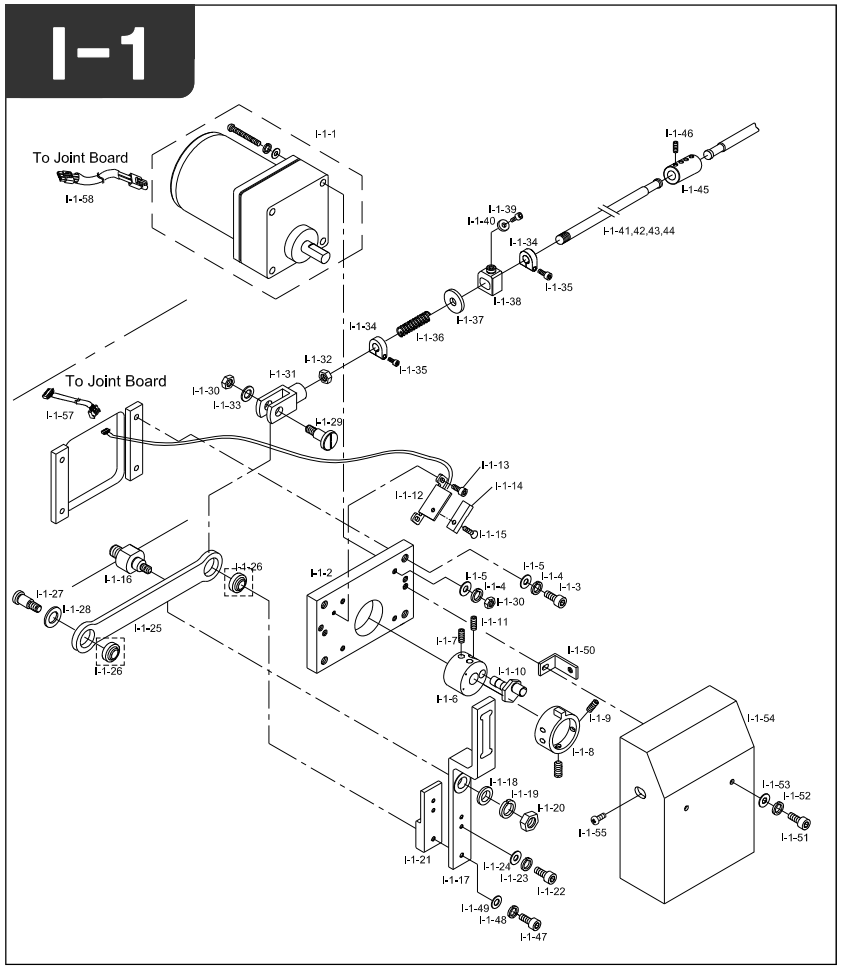

Note

Ref.No	Part No.	Part Name	Applied Period	Interchangeability	Hardware	Q'ty	Remark
I-1-37	03002800H000	Return Spring Stopper Washer				18	
I-1-38	03003000H000	Return Spring Fix Pin				18	
I-1-39	02015SC-7113	Hex.Socket Bolt(M4*L10)			O	18	
I-1-40	03002900H000	Return Spring Fix Pin Washer				18	
I-1-41	03007000HEK0	UPPER THREAD DRIVING SHAFT A				1	
I-1-42	03007100HHI0	UPPER THREAD DRIVING SHAFT B				1	
I-1-43	03007200HEK0	UPPER THREAD DRIVING SHAFT C				1	
I-1-44	03007200HHI0	UPPER THREAD DRIVING SHAFT C				1	
I-1-45	03007300H000	Upper Thread Shaft Coupling				2	
I-1-46	08113SC-A001	Collar Screw (11/64, L6)				8	
I-1-47	08091SC-7113	Hex. Socket Bolt (M6*L20)			O	1	
I-1-48	16014SW-4115	Spring Washer (@8)			O	1	
I-1-49	08057SW-1111	Washer (@6)			O	1	
I-1-50	03008600H000	Motor Cover Fixing Bracket				2	
I-1-51	02023SC-7113	Hex.Socket Bolt (M4*L8)			O	2	
I-1-52	18014SW-3115	Spring Washer (@4-No2)			O	2	
I-1-53	18015SW-3111	Washer (4@-S)			O	2	
I-1-54	GP-020679-00	Upper Thread Hook Motor Cover	Aug,21,06 ~ Sep,13,06	X		1	
	GP-020679-01		Sep,13,06 ~	△			
I-1-55	02010SC-3123	Truss Screw (M4*L8)			O	2	
I-1-57	CA-000718-00	Wiper Sensor To Joint Board Cable	Dec,07,05 ~	X		1	
I-1-58	CA-000717-00	Upper Thread Hook Motor To Joint Board Cable	Dec,07,05 ~	X		1	

I

I-2

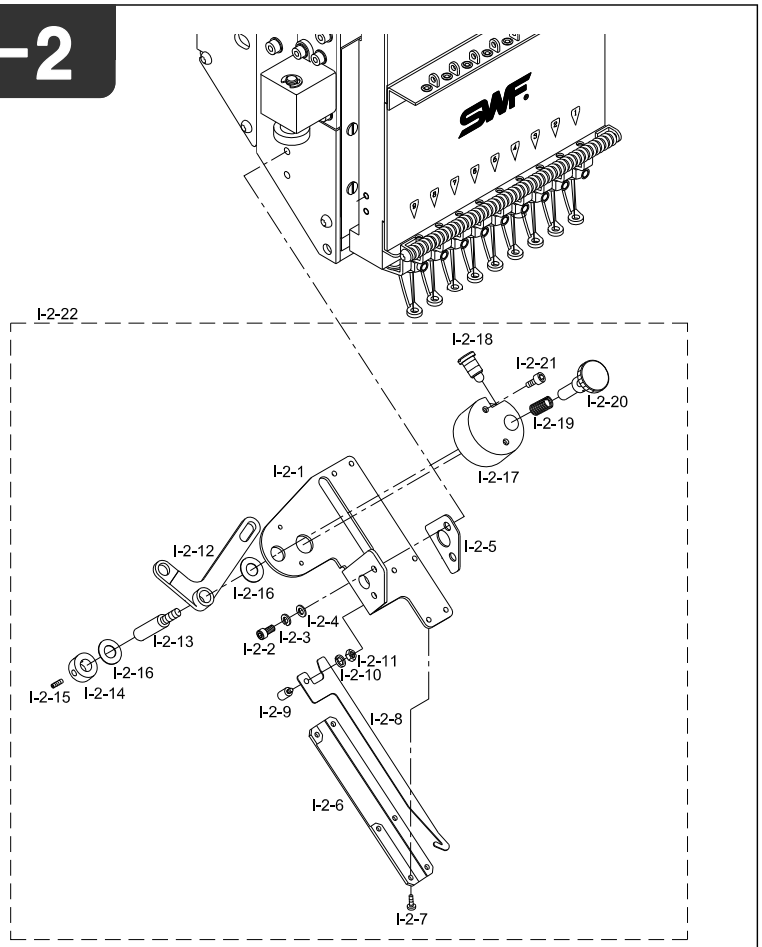

Note

Ref.No	Part No.	Part Name	Applied Period	Interchangeability	Hardware	Q'ty	Remark
I-2-1	03500100I000	Upper Thread Catcher Base				20	
I-2-2	02023SC-7113	Hex.Socket Bolt (M4*L8)			O	40	
I-2-3	18014SW-3115	Spring Washer (@4-No2)			O	40	
I-2-4	18015SW-3111	Washer (4@-S)			O	40	
I-2-5	GP-022424-00	Spacer	Oct,18,06 ~ Oct,26,06	X		20	
	GP-022424-01		Oct,26,06 ~	△			
I-2-6	03500210H000	Base Cover				20	
I-2-7	03005MC-3123	TRUSS SCREW (M3*L5)			O	120	
I-2-8	03500300I000	UPPER THREAD CATCHER				20	
I-2-9	03500400H000	Upper Catcher Connect Pin				20	
I-2-10	11019SW-9115	Spring Washer (@3)			O	20	
I-2-11	11014SN-1211	Hex. Nut (M3)			O	20	
I-2-12	03500500H000	Upper Catcher Driving Lever				20	
I-2-13	03500600H000	Driving Lever Pin				20	
I-2-14	03500700H000	Driving Lever Pin Collar				20	
I-2-15	04014SC-4517	Hex.Socket Set Screw(M5*L5)			O	40	
I-2-16	03500800H000	Driving Lever Pin Washer				40	
I-2-17	03500900H000	Clutch Block				20	
I-2-18	03501000H000	Clutch Stud Screw				20	
I-2-19	03501100H000	Clutch Spring				20	
I-2-20	03501200H000	Clutch Dial				20	
I-2-21	11029SC-4113	Hex. Socket Bolt (M4*L20)			O	40	
I-2-22	08500000I000	Wiper Assy				20	

I-3

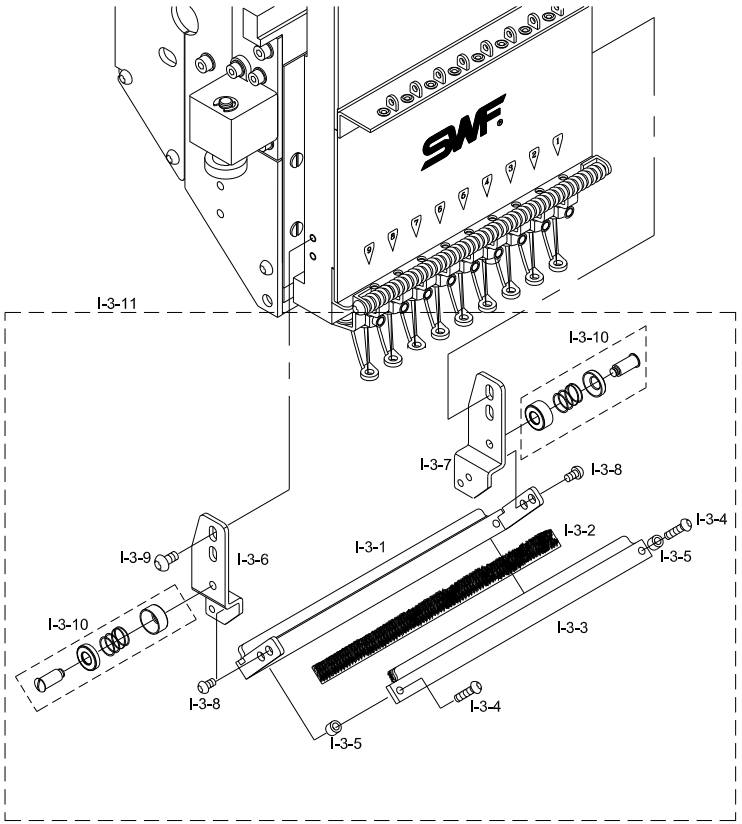

Note

Ref.No	Part No.	Part Name	Applied Period	Interchangeability	Hardware	Q'ty	Remark
I-3-1	09034PR-AE00	Upper Thread Presser Base 6C				20	
	09030PR-A002	Upper Thread Presser Base 9C				20	
	09026PR-AB00	Upper Thread Presser Base 12C				20	
I-3-2	09035ET-AE00	Velcro 6C				40	
	09031ET-A002	Velcro 9C				40	
	09027ET-AB00	Velcro 12C				40	
I-3-3	09037PR-AE00	Presser Base Cover 6C				20	
	09033PR-A002	Presser Base Cover 9C				20	
	09029PR-AB00	Presser Base Cover 12C				20	
I-3-4	07018SC-8118	Plus Screw (M3*L8)			O	40	
I-3-5	09038CW-A001	Thread Presser Space				40	
I-3-6	09040PR-A001	Bracket (L)				20	
I-3-7	09041PR-A001	Bracket (R)				20	
I-3-8	06010SC-8118	Plus Screw (M3*L4)			O	80	
I-3-9	02009SC-A001	Bracket Screw				80	
I-3-10	09044PR-A001	Upper Thread Holder Disk "A" Set				40	
I-3-11	08600003B000	Upper Thread Presser Base Assy				20	

I-4

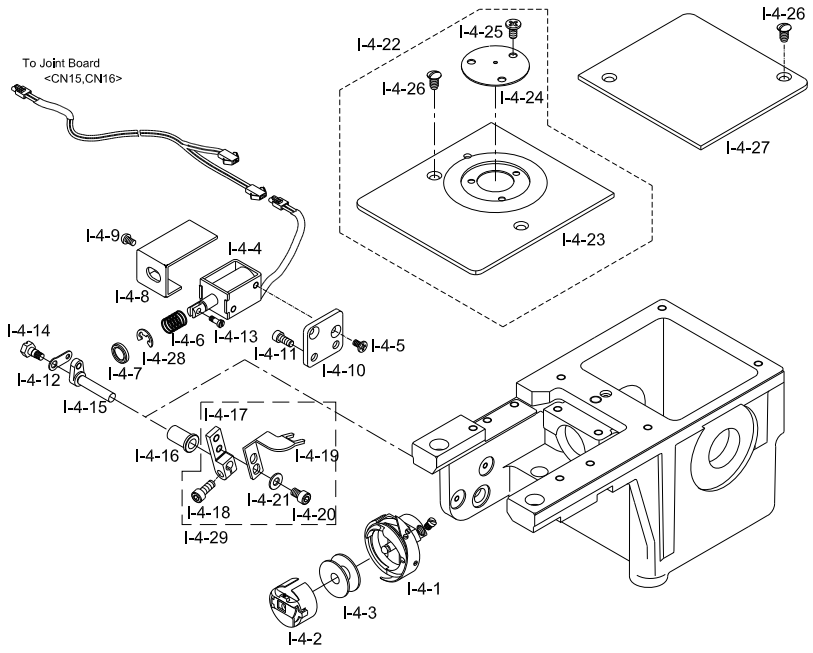

Note

Ref.No	Part No.	Part Name	Applied Period	Interchangeability	Hardware	Q'ty	Remark
I-4-1	04033AF-D002	Rotary Hook Set			O	20	
I-4-2	04034AF-A001	Bobbin Case Set			O	20	
I-4-3	04035AF-A001	Bobbin			O	20	
I-4-4	10013PM-A001	Picker Sol. Cover				20	
I-4-5	10010SC-8119	Plus Screw (M3*L5)			O	40	
I-4-6	10011SP-A001	Sol. Spring				20	
I-4-7	10012RB-A001	Cushion Washer				20	
I-4-8	10013PM-A001	Picker Sol. Cover				20	
I-4-9	06010AF-8118	Plus Screw (M3*L4)			O	40	
I-4-10	10015PR-A001	Picker Sol. Base				20	
I-4-11	02023SC-7113	Hex. Socket Bolt (M4*L8)			O	20	
I-4-12	10019PR-A001	Connecting Link				20	
I-4-13	10021SC-A001	Sol. Stud Screw				20	
I-4-14	08012CW-T121	Connecting Plate Stud Screw				20	
I-4-15	10006FU-A001	Picker Connecting Crank				20	
I-4-16	08015PM-A001	Bushing				20	
I-4-17	10004CW-A001	Picker Holder				20	
I-4-18	02023SC-7113	Hex. Socket Bolt (M4*L8)			O	20	
I-4-19	10001AF-A001	Picker				20	
I-4-20	02014SC-7113	Hex. Socket Bolt (M4*L5)			O	40	
I-4-21	06003SW-2111	Washer (@4)			O	40	
I-4-22	12000110B000	NEEDEL PLATE SET				20	
I-4-23	GP-008997-00	Needle Plate	Apr,30,05 ~	X		20	
I-4-24	12000400B000	NEEDLE PLATE ATTACHMENT				20	
I-4-25	04007SC-A001	Cushion Cover Screw				60	
I-4-26	04004AF-A001	Needle Plate Screw				80	
I-4-27	04008PR-A001	Hook Base Cover				20	
I-4-28	13044SR-4013	E-Ring (@4)			O	20	
I-4-29	AS-008142-00	Picker Assy		X			

I

Spool

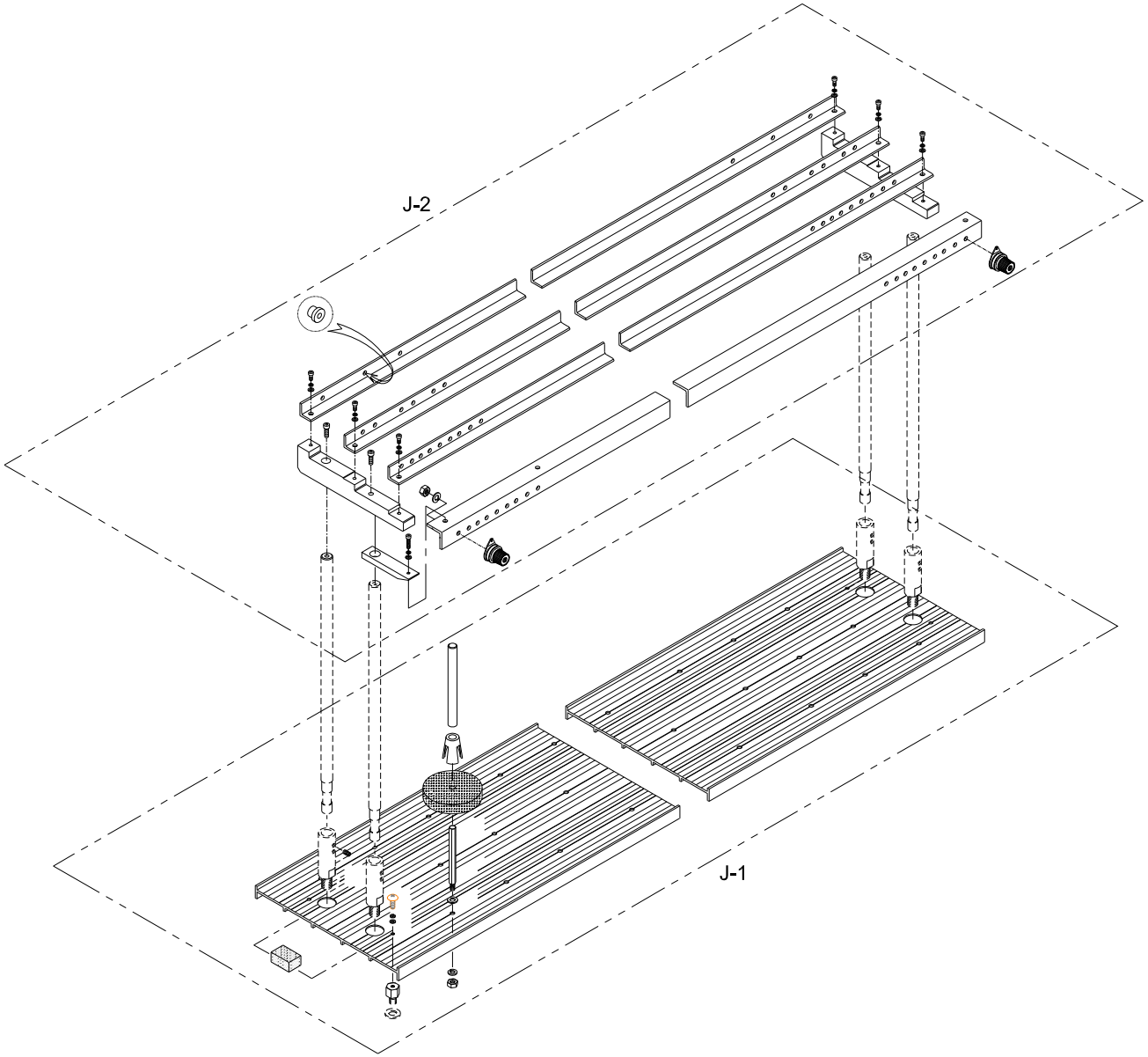

J-1

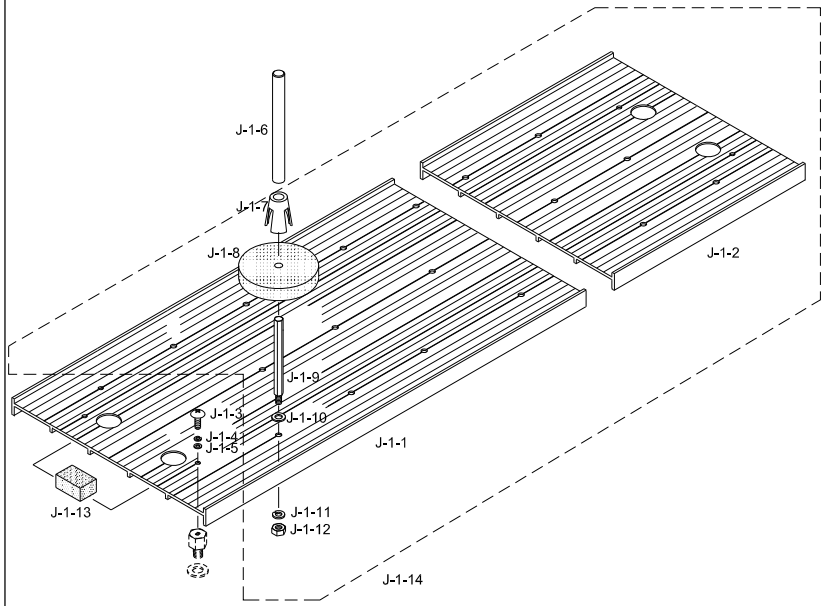

Note

Ref.No	Part No.	Part Name	Applied Period	Interchangeability	Hardware	Q'ty	Remark
J-1-1	10601403BHI0	Spool Plate A				1	
J-1-2	10601503BHI0	Spool Plate B				1	
J-1-3	02010SC-3123	TRUSS SCREW (M4*L8)			O	20	
J-1-4	02028SW-9115	Spring Washer (@4)			O	20	
J-1-5	10000200B000	Spool Plate Washer				20	
J-1-6	10000100A000	Thread Guide (L=200)				36	
J-1-7	12012PM-A001	Spool Holder				162	
J-1-8	12052SF-A001	Spool Sponge				162	
J-1-9	12009SC-A001	Spool Post				162	
J-1-10	18049SW-3111	Washer (@5)			O	162	
J-1-11	18048SW-3115	Spring Washer (@5)			O	162	
J-1-12	12010SN-1211	Hex.Nut (M5-No2)			O	162	
J-1-13	12049SF-A001	Felt				12	
J-1-14	10700003BHIO	Spool Plate Assy				1	

J

J-2

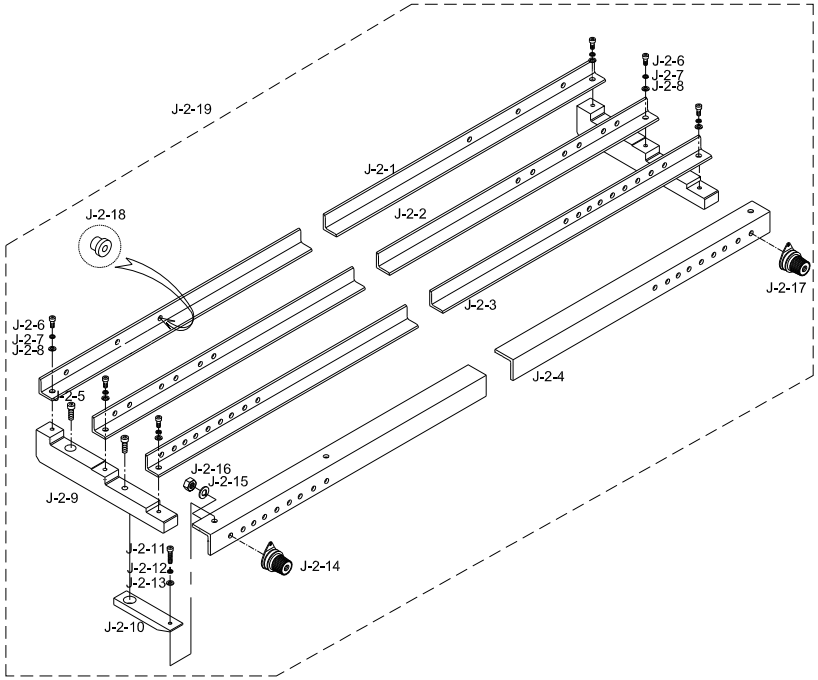

Note

Ref.No	Part No.	Part Name	Applied Period	Interchangeability	Hardware	Q'ty	Remark
J-2-1	12019AD-A021	Angle "A"				1	
J-2-2	12020AD-A021	Angle "B"				1	
J-2-3	10600403BHI0	Angle "C"				1	
J-2-4	10600513BHI0	Angle "D"				1	
J-2-5	03016SC-4113	Hex. Socket Bolt (M5*L15)			O	40	
J-2-6	07016SC-7113	Hex. Socket Bolt (M4*L12)			O	30	
J-2-7	02028SW-9115	Spring Washer (@4)			O	30	
J-2-8	06003SW-2111	Washer (@4)			O	30	
J-2-9	10600100H000	Angle Frame				10	
J-2-10	10600600H000	Angle Base				10	
J-2-11	02015SC-7113	Hex.Socket Bolt(M4*L10)			O	10	
J-2-12	02028SW-9115	Spring Washer(@4)			O	10	
J-2-13	06003SW-2111	Washer(@4)			O	10	
J-2-14	AS-000556-00	SUB TENSION ADJUSTING SET(NEW)				144	
J-2-15	18048SW-3115	Spring Washer (@5)			O	162	
J-2-16	03031SN-A001	Pin. Nut (11/64,N=40)			O	162	
J-2-17	AS-000557-00	SUB TENSION ADJUSTING SET				18	
J-2-18	12042PM-A001	Eyelet				324	
J-2-19	AS-006810-00	Angle Assy				1	

J

Work Table (Y-Stroke 1000 Below)

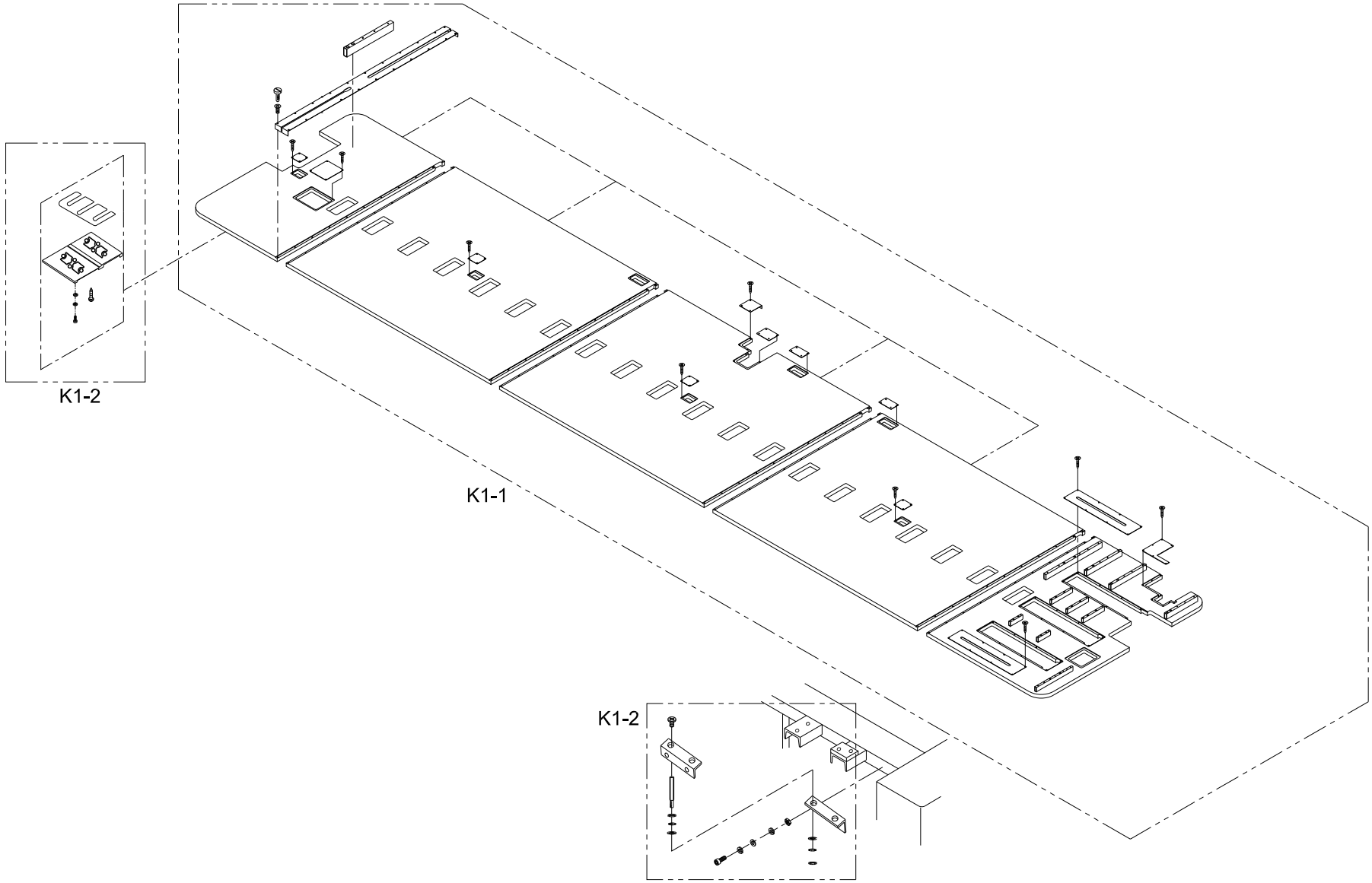

K1-1

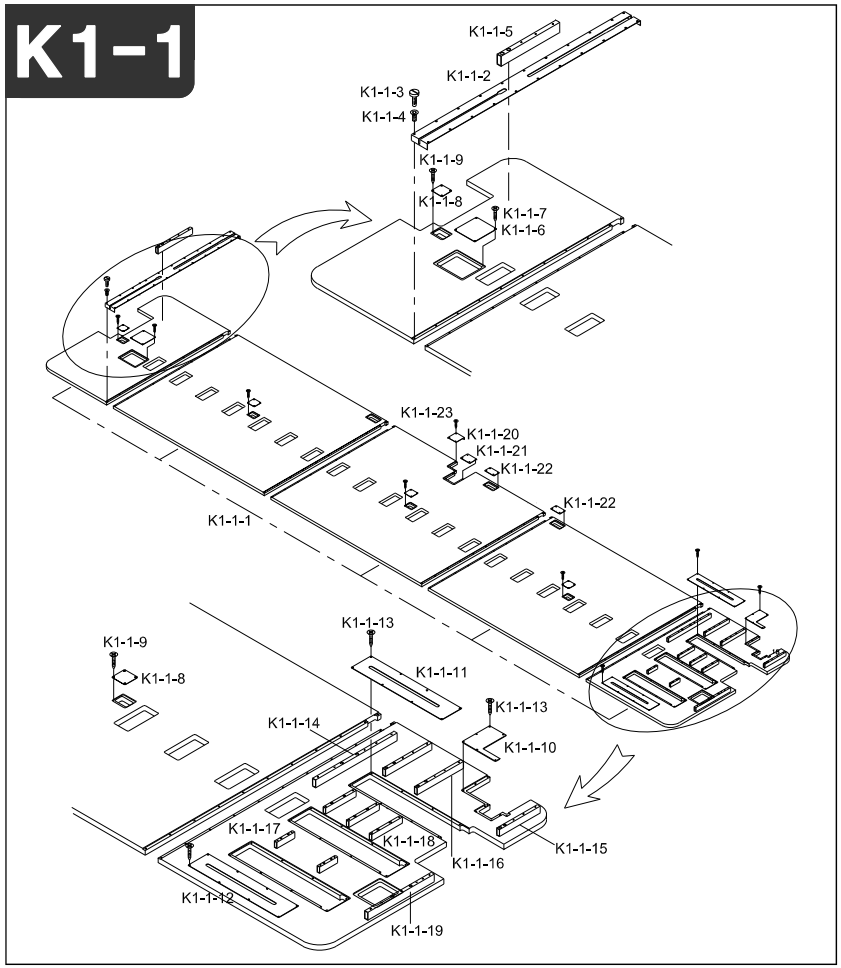

Note

Ref.No	Part No.	Part Name	Applied Period	Interchangeability	Hardware	Q'ty	Remark
K1-1-1	AS-004691-01	Table(Set)	May,22,06 ~	X		1	
K1-1-2	GP-017824-00	TABLE CONNECTING COVER	May,22,06 ~ Sep,15,06			4	
	GP-017824-01		Sep,15,06 ~				
K1-1-3	SC-000236-00	SCREW M4*L10	Aug,26,04 ~	X	O	96	
K1-1-4	SN-000164-00	TABLE INSERT NUT	Aug,17,07 ~ Mar,06,08	X		96	
	SN-000164-01		Mar,06,08 ~	△			
K1-1-5	01000700H004	Table Support(D)(L=349.5)				2	
K1-1-6	08088PR-B001	Mes Driving Box Cover				1	
K1-1-7	08101SC-8329	Tapping Screw (M3*L16)			O	8	
K1-1-8	16035LA-A001	Low Shaft Coupling Cover B				3	
K1-1-9	08101SC-8329	Tapping Screw (@3*L16)			O	16	
K1-1-10	GP-006323-00	X-Motor Coupling Cover	Dec,20,04 ~ Mar,06,08	X		3	
	GP-006323-01		Mar,06,08 ~	△			
K1-1-11	GP-017827-00	L.M Guide Cover A	May,22,06 ~ Jan,25,07	X		2	
	GP-017827-01		Jan,25,07 ~	△			
K1-1-12	GP-017828-00	L.M Guide Cover C	May,22,06 ~	X		1	
K1-1-13	08101SC-8329	Tapping Screw (M3*L16)			O	26	
K1-1-14	16006CW-A021	Table Support(B)(L=740)				1	
K1-1-15	01000700H004	Table Support(D)(L=349.5)				2	
K1-1-16	16007CW-A021	Table Support(E)(L=450)				2	
K1-1-17	16017CW-A021	Table Support(F)(L=170)				2	
K1-1-18	16008CW-A021	Table Support(G)(L=315)				3	
K1-1-19	01000300B004	TABLE SUPPORT ANGLE "K"				1	
K1-1-20	GP-006538-00	Y-Coupling Cover A	Dec,21,04 ~	X		16	
K1-1-21	GP-006540-00	Y-Coupling Cover C	Dec,21,04 ~	X		1	
K1-1-22	GP-017156-00	Y-Coupling Cover	Apr,14,06 ~	X		1	
K1-1-23	08101SC-8329	Tapping Screw (M3*L16)			O	6	

K1-2

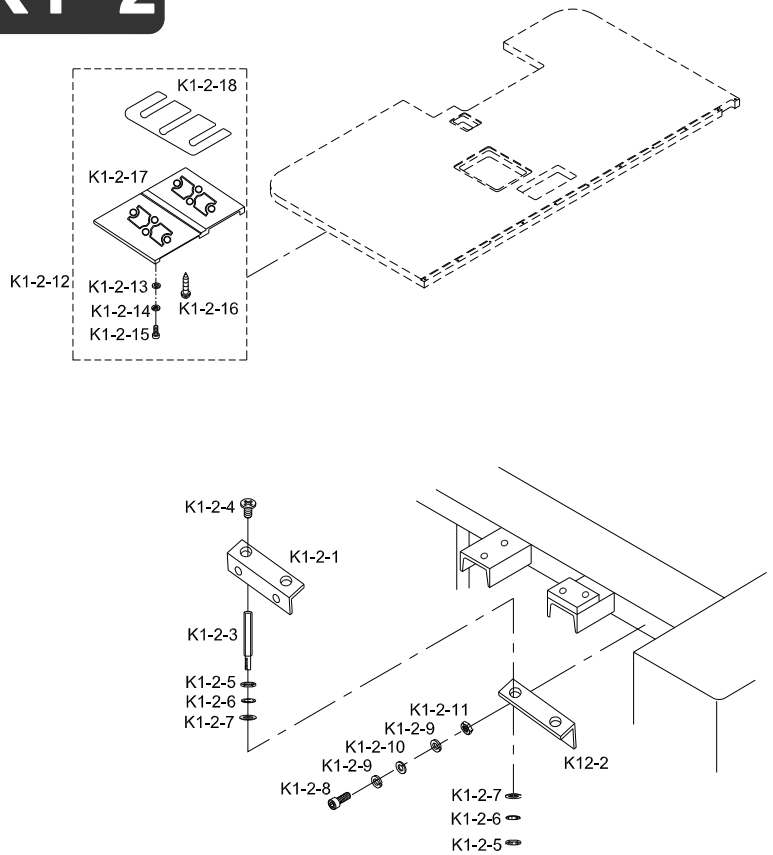

Note

Ref.No	Part No.	Part Name	Applied Period	Interchangeability	Hardware	Q'ty	Remark
K1-2-1	16013CW-A001	Table Support(E)(L=320)				1	
K1-2-2	16014CW-A001	Table Support Bracket "A"				1	
K1-2-3	16021CW-A001	Stud Bolt				2	
K1-2-4	06020MC-8119	PLUSS SCREW (M6*L20)			O	2	
K1-2-5	04032SN-A001	Hex. Nut (M8)			O	4	
K1-2-6	15095SW-3115	Spring Washer (@8)			O	2	
K1-2-7	04029SW-A001	Stud Bolt Washer (@8)			O	4	
K1-2-8	08091SC-7113	Hex. Socket Bolt (M6*L20)			O	2	
K1-2-9	16014SW-4115	Spring Washer (@6)			O	2	
K1-2-10	08057SW-1111	Washer (@6)			O	4	
K1-2-11	13042SN-1111	Hex. Nut (M6*T5-R)			O	2	
K1-2-12	06000010B000	Table Connecting Plate (Set)				20	
K1-2-13	18049SW-3111	Washer (@5)			O	160	
K1-2-14	18048SW-3115	Spring Washer (@5)			O	160	
K1-2-15	02031SC-7113	Hex. Socket Screw(M5*L10)			O	160	
K1-2-16	16010SC-8330	Tapping Screw (M6*L25)			O	160	
K1-2-17	06001100B000	TABLE CONNECTING PLATE "C"				24	
K1-2-18	06001200B000	TABLE SPACE PLATE "C"				48	

Work Table (Y-Stroke 1200 Above)

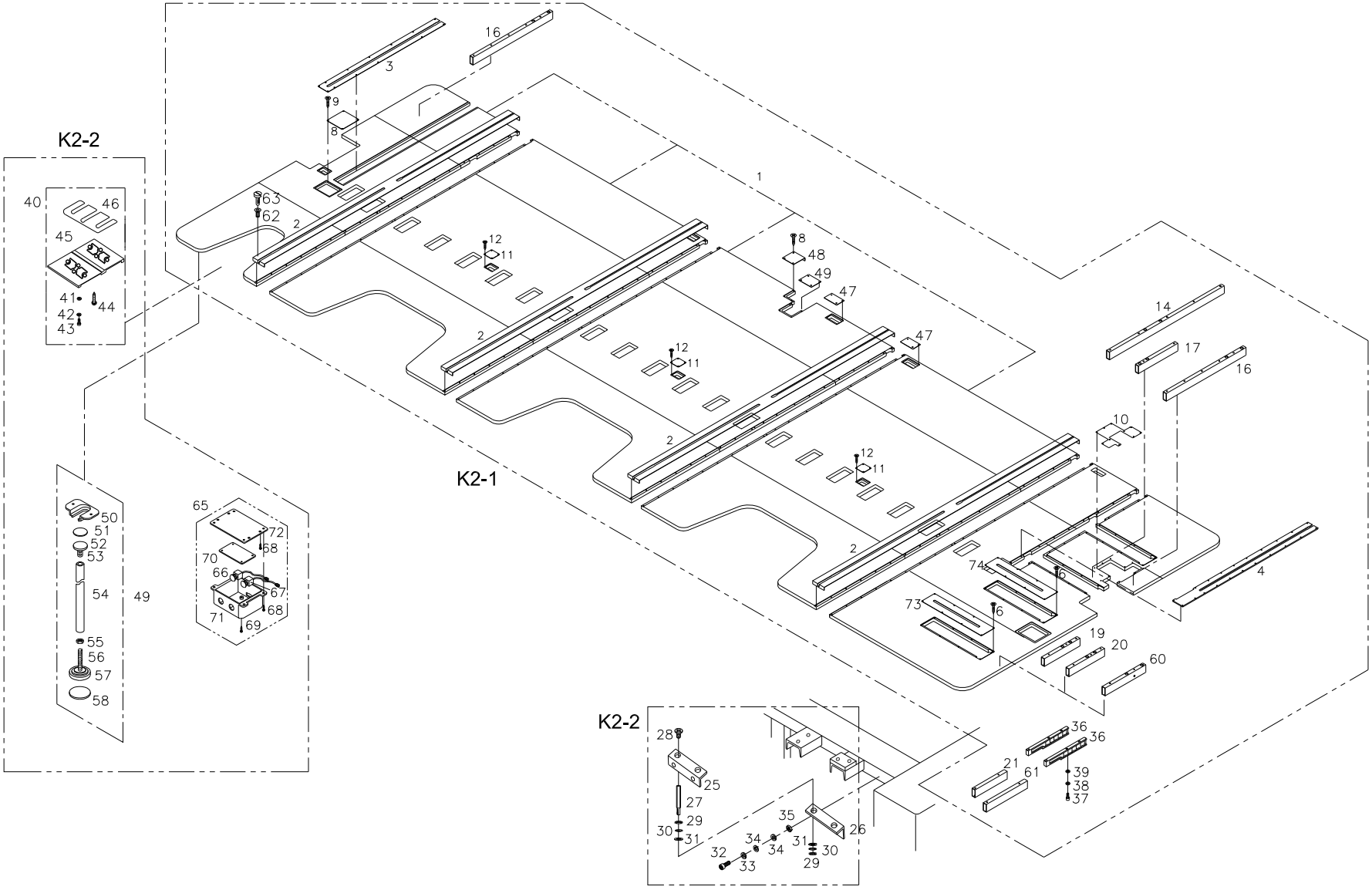

K2-1

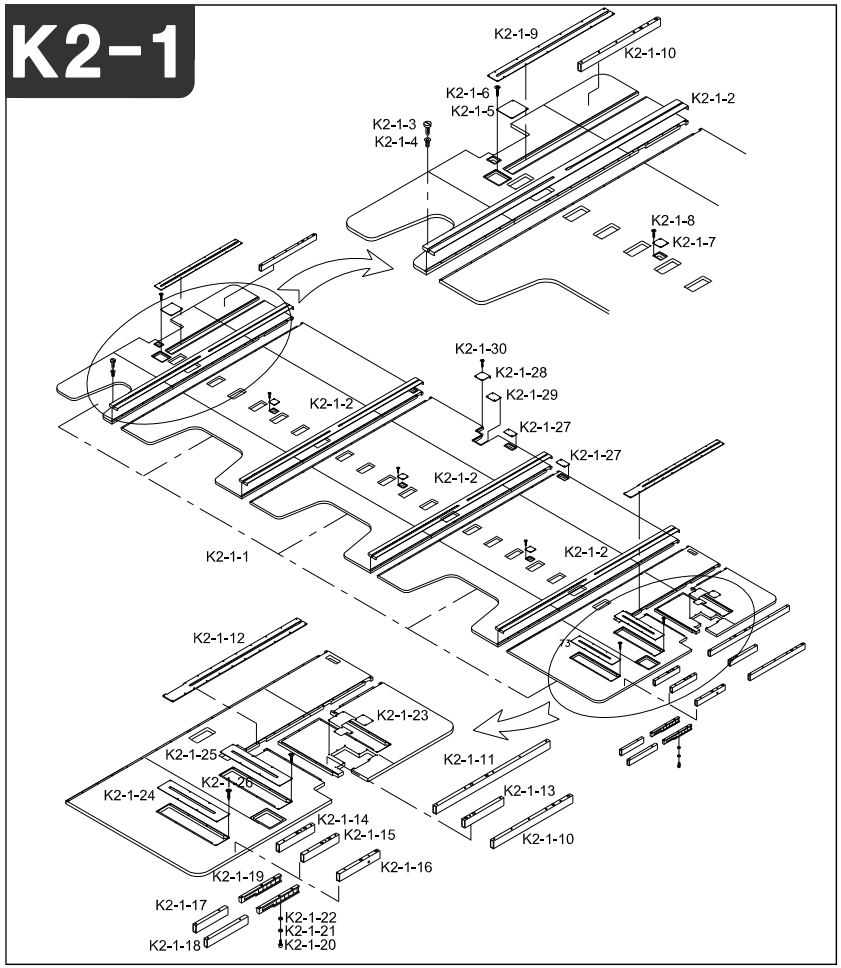

Note

Ref.No	Part No.	Part Name	Applied Period	Interchangeability	Hardware	Q'ty	Remark
K2-1-1	AS-005607-00	Table(Set)	Oct,28,06 ~	X		1	
K2-1-2	GP-021267-00	TABLE CONNECTING COVER				4	
K2-1-3	SC-000236-00	SCREW M4*L10	Aug,26,04 ~	X	O	152	
K2-1-4	SN-000164-00	TABLE INSERT NUT	Aug,17,07 ~ Mar,06,08	X		152	
	SN-000164-01		Mar,06,08 ~	△			
K2-1-5	08088PR-B001	Mes Driving Box Cover				1	
K2-1-6	08101SC-8329	Tapping Screw (M3*L16)			O	4	
K2-1-7	16035LA-A001	Low Shaft Coupling Cover B				4	
K2-1-8	08101SC-8329	Tapping Screw (@3*L16)			O	20	
K2-1-9	GP-004228-00	TABLE CONNECTING COVER	Aug,26,04 ~	X		1	
K2-1-10	06000400B009	Table Support(D)(L=730)				2	
K2-1-11	06000200B009	Table Support(B)(L=1051)				2	
K2-1-12	06000010B000	Table Connecting Cover(D)				1	
K2-1-13	06000500B009	Table Support(E)(L=360)				3	
K2-1-14	06000700B009	Table Support(G)(L=325)				3	
K2-1-15	06000800B009	Table Support(H)(L=376)				20	
K2-1-16	06000200BTZI	TABLE SUPPORT ANGLE "C-				1	
K2-1-17	06000900B009	Table Support(I)(L=293)				2	
K2-1-18	06000900BUYK	TABLE SUPPORT ANGLE "K"				1	
K2-1-19	GP-010089-00	Table Support Connecting Bar B	Jun,14,05 ~ Oct,04,05	X		23	
	GP-010089-01		Oct,04,05 ~ Mar,14,08	△			
	GP-010089-02		Mar,14,08 ~ Mar,28,08	△			
	GP-010089-03		Mar,28,08 ~	△			
K2-1-20	16009SC-4113	Hex. Socket Bolt				92	
K2-1-21	16014SW-4115	Spring Washer (@6)			O	92	
K2-1-22	08057SW-1111	Washer (@6)			O	92	
K2-1-23	GP-006144-00	X-Coupling Cover	Dec,09,04 ~	X		1	
K2-1-24	GP-021058-00	X-LM Guide Cover B				1	
K2-1-25	GP-021059-00	X-LM Guide Cover C	Aug,31,06 ~ Jan,25,07	X		1	
	GP-021059-01		Jan,25,07 ~	△			
K2-1-26	08101SC-8329	Tapping Screw (M3*L16)			O	26	
K2-1-27	GP-017156-00	Y-Coupling Cover	Apr,14,06	X		1	
K2-1-28	GP-006538-00	Y-Coupling Cover A	Dec,21,04 ~	X		16	
K2-1-29	GP-006540-00	Y-Coupling Cover C	Dec,21,04 ~	X		1	
K2-1-30	08101SC-8329	Tapping Screw (M3*L16)			O	6	

K2-2

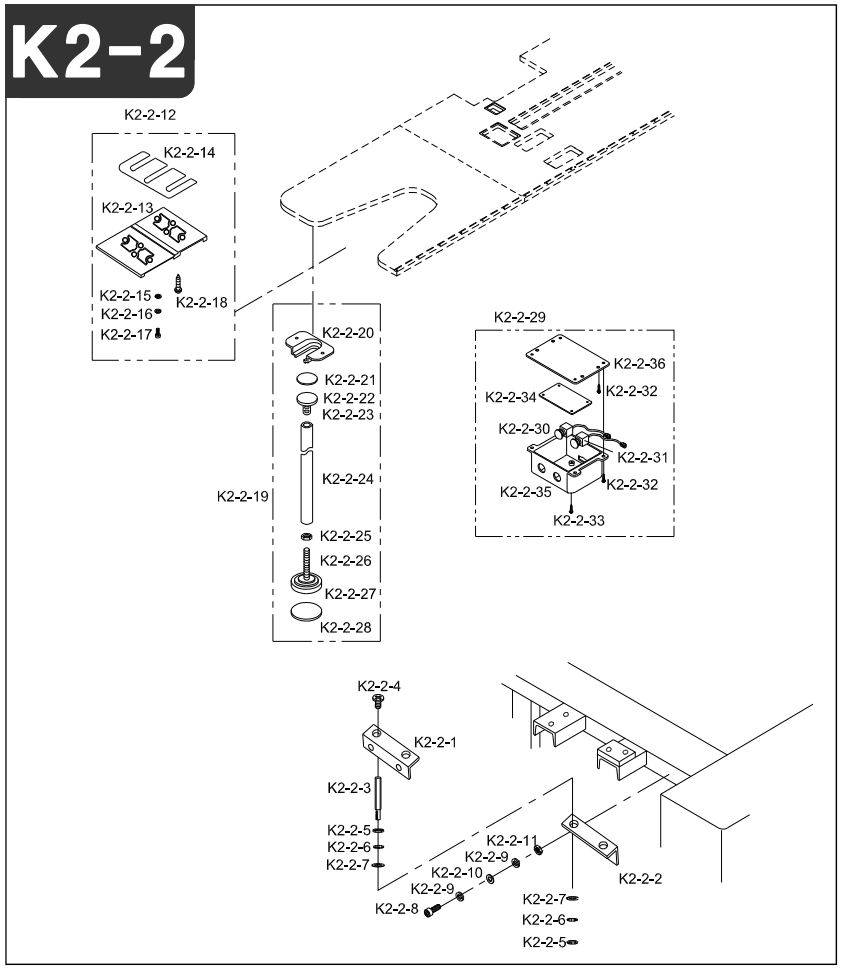

Note

Ref.No	Part No.	Part Name	Applied Period	Interchangeability	Hardware	Q'ty	Remark
K2-2-1	16013CW-A001	Table Support(E)(L=320)				1	
K2-2-2	16014CW-A001	Table Support Bracket "A"				1	
K2-2-3	16021CW-A001	Stud Bolt				2	
K2-2-4	06020MC-8119	PLUSS SCREW (M6*L20)			O	2	
K2-2-5	04032SN-A001	Hex. Nut (M8)			O	4	
K2-2-6	15095SW-3115	Spring Washer (@8)			O	2	
K2-2-7	04029SW-A001	Stud Bolt Washer (@8)			O	4	
K2-2-8	08091SC-7113	Hex. Socket Bolt (M6*L20)			O	2	
K2-2-9	16014SW-4115	Spring Washer (@6)			O	2	
K2-2-10	08057SW-1111	Washer (@6)			O	2	
K2-2-11	13042SN-1111	Hex. Nut (M6*T5-R)			O	2	
K2-2-12	16043BM-A021	Table Connecting Plate (Set)				20	
K2-2-13	06001100B000	TABLE CONNECTING PLATE "C"				24	
K2-2-14	06001200B000	TABLE SPACE PLATE "C"				48	
K2-2-15	18049SW-3111	Washer (@5)			O	160	
K2-2-16	18048SW-3115	Spring Washer (@5)			O	160	
K2-2-17	02031SC-7113	Hex. Socket Screw(M5*L10)			O	160	
K2-2-18	16010SC-8330	Tapping Screw (M6*L25)			O	160	
K2-2-19	16047BM-A021	TABLE SUPPORT BASE SET (L)				10	
	12000200B009	TABLE SUPPORT BAR B				2	
K2-2-20	12010000B009	TABLE SUPPORT BAR BRACKET				1	
K2-2-21	16048RB-A021	TABLE SUPPORT PLATE RUBBER				1	
K2-2-22	16047PR-A021	TABLE SUPPORT PLATE				1	
K2-2-23	16049CW-A021	TABLE SUPPORT PLATE PIN				1	
K2-2-24	16050CW-A021	TABLE SUPPORT BAR				1	
	12000200B009	TABLE SUPPORT BAR B				1	
K2-2-25	02321SN-A001	HEX. NUT (M16)				2	
K2-2-26	02325SC-A021	HEX. BOLT (M16*L150)				1	
K2-2-27	02331CW-A001	TABLE SUPPORT BASE SET				1	
K2-2-28	02332RB-A001	TABLE SUPPORT RUBBER(B)				1	
K2-2-29	SWF-00000344	OFFSET SWITCH BOX ASS'Y				4	
K2-2-30	02026EL-UK01	START S/W				1	
K2-2-31	02027EL-UK01	STOP S/W				1	
K2-2-32	09005SC-3123	SCREW(M3*L6)			O	8	
K2-2-33	22015SC-9134	SCREW(M3*L6)			O	5	
K2-2-34	BD-000177-00	OFFSET S/W BOARD	Apr,04,05 ~	X		1	
K2-2-35	GP-012130-00	OFFSET S/W BOX	Sep,23,05 ~	X		1	

K2-2

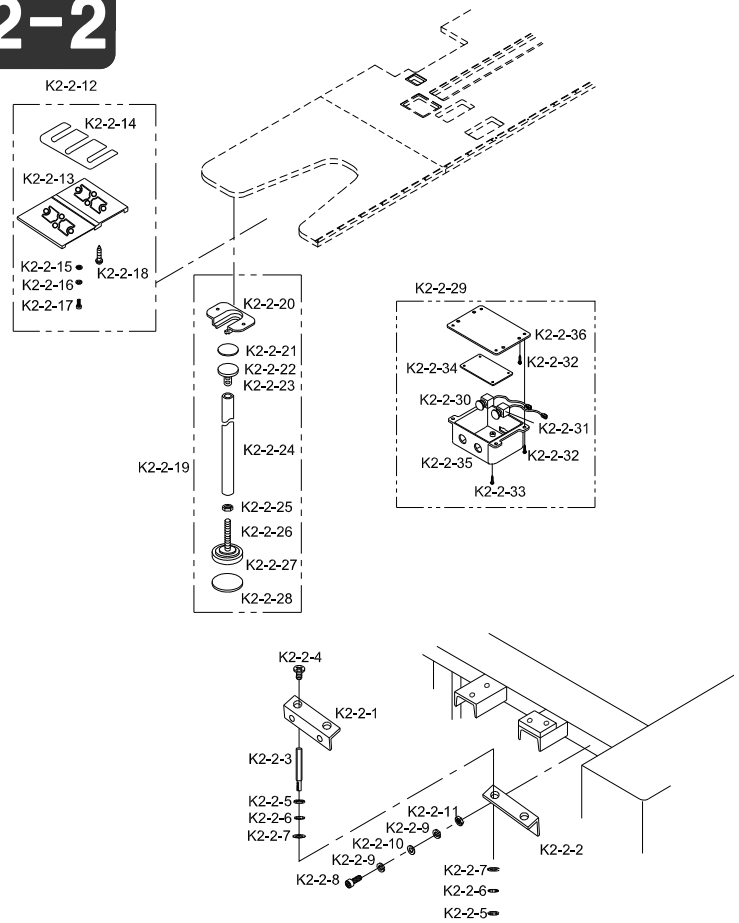

Note

Ref.No	Part No.	Part Name	Applied Period	Interchangeability	Hardware	Q'ty	Remark
K2-2-36	GP-012131-00	FIXING PLATE FOR OFFSET S/W BOX	Sep,23,05 ~	X		1	

K2

Cable

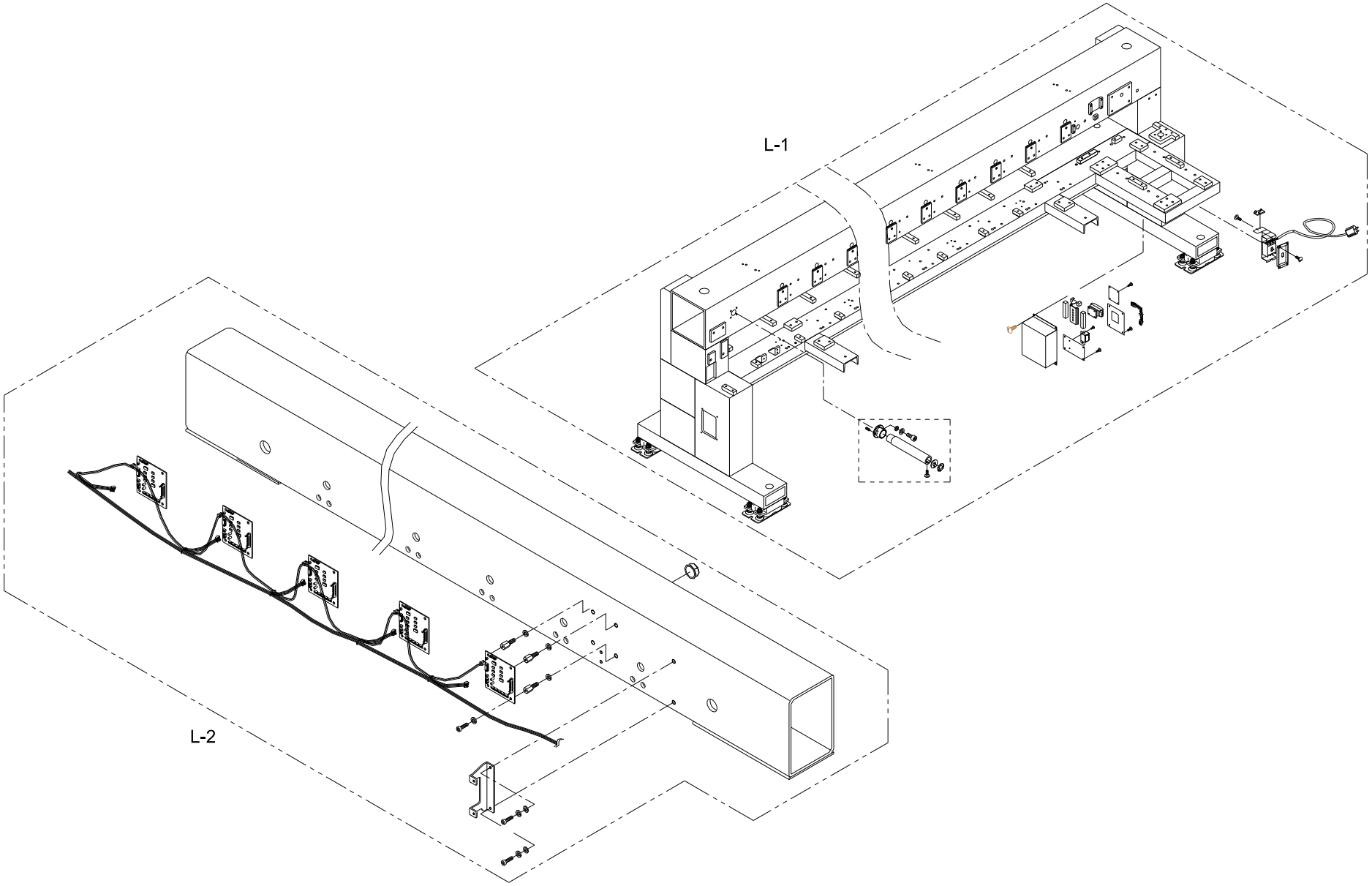

L-1

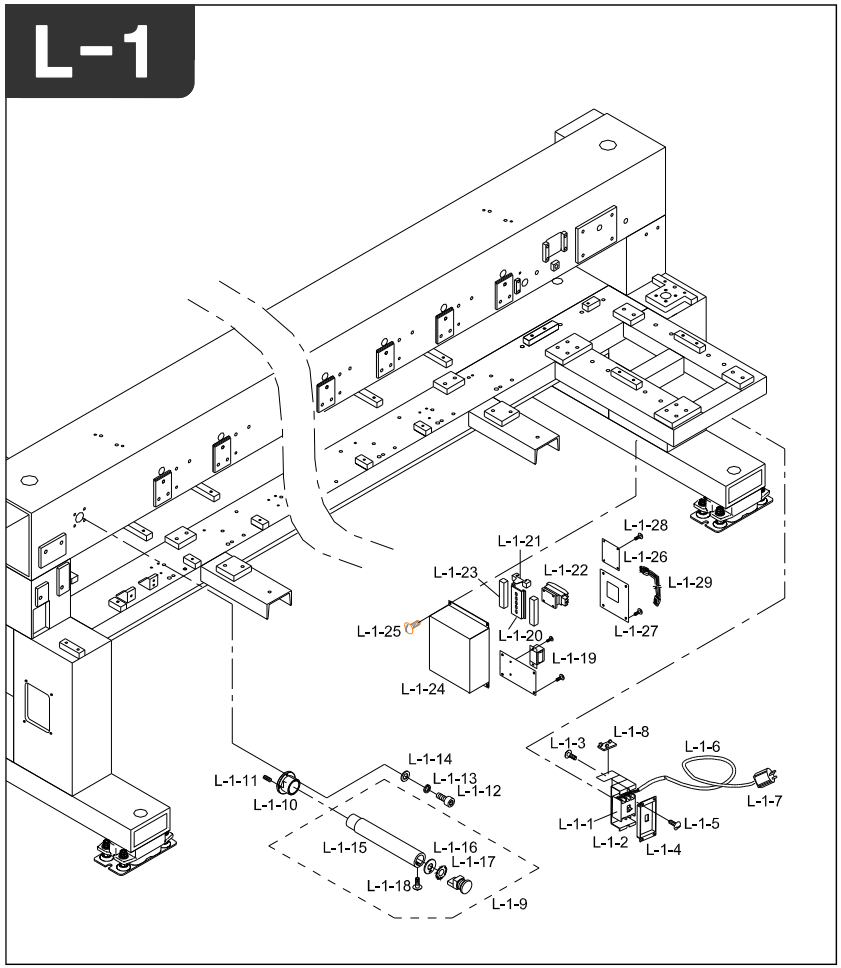

Note

Ref.No	Part No.	Part Name	Applied Period	Interchangeability	Hardware	Q'ty	Remark
L-1-1	24029ET-A001	Main Power S/W				1	
L-1-2	GP-015700-00	Main Power S/W Bracket	Feb,23,06 ~	X		1	
L-1-3	02038SC-9131	Plus Screw (M5*L10)			O	2	
L-1-4	09000600B000	ON/OFF S/W BOX COVER				1	
L-1-5	02044SC-3123	Truss Screw (M5*L8)			O	4	
L-1-6	MH-01	MAIN POWER PLUG TO NFB INPUT				1	
L-1-7	24032ET-A001	Power Plug(3P)				1	
L-1-8	BD-000168-00	SURGE PROTECTOR	Jan,20,05 ~ Apr,19,05	X		1	
	BD-000168-01		Apr,19,05 ~ Jun,05,08	△			
	BD-000168-02		Jun,05,08 ~	△			
L-1-9	-	Emergency Switch (A) Set				1	
L-1-10	09000400B000	Guide Bush (A)				1	
L-1-11	04014SC-4517	Hex. Socket Set Screw (M5*L6)			O	4	
L-1-12	08091SC-7113	Hex. Socket Bolt (M6*L20)			O	4	
L-1-13	03026SW-9115	Spring Washer (@6)			O	4	
L-1-14	08057SW-1111	Washer (@6)			O	4	
L-1-15	GP-009902-00	Emergency Switch Holder(A) [L=268]	Jun,02,05 ~	X		1	
L-1-16	09000500B000	Emergency Switch Plate				1	
L-1-17	-	Emergency Switch Sticker				1	
L-1-18	02023SC-7113	Truss Screw (M4*L8)			O	1	
L-1-19	05000210T000	TRANSFORMER (EMT25V) 1A/25.5V				1	
L-1-20	02000910T000	MAGNETIC S/W FIXED BRACKET				1	
L-1-21	02001300T000	BRACKET STOPPER (CE)				2	
L-1-22	02000100T000	MAGNETIC SWITCH SET				1	
L-1-23	09001400BT00	CEMENT RESISTANCE (4.7/20W)				2	
L-1-24	GP-021698-00	Noise Filter Box	Sep,20,06 ~	X		1	
L-1-25	02044SC-3123	Truss Screw(M5*L10)			O	8	
L-1-26	BD-000256-00	Shunt Board	Aug,29,05 ~ Sep,15,05	X		1	
	BD-000256-01		Sep,15,05 ~ Sep,28,05	△			
	BD-000256-02		Sep,28,05 ~ Oct,28,05	△			
	BD-000256-03		Oct,28,05 ~ Feb,27,06	△			
	BD-000256-04		Feb,27,06 ~ Apr,26,06	△			
	BD-000256-05		Apr,26,06 ~ Mar,10,07	△			
	BD-000256-06		Mar,10,07 ~ Nov,19,08	△			
	BD-000256-07		Nov,19,08 ~	△			
L-1-27	BD-000304-00	MS Top Board	Nov,25,05 ~ Mar,27,07	X		1	
	BD-000304-01		Mar,27,07 ~ Jun,29,07	△			

L-1

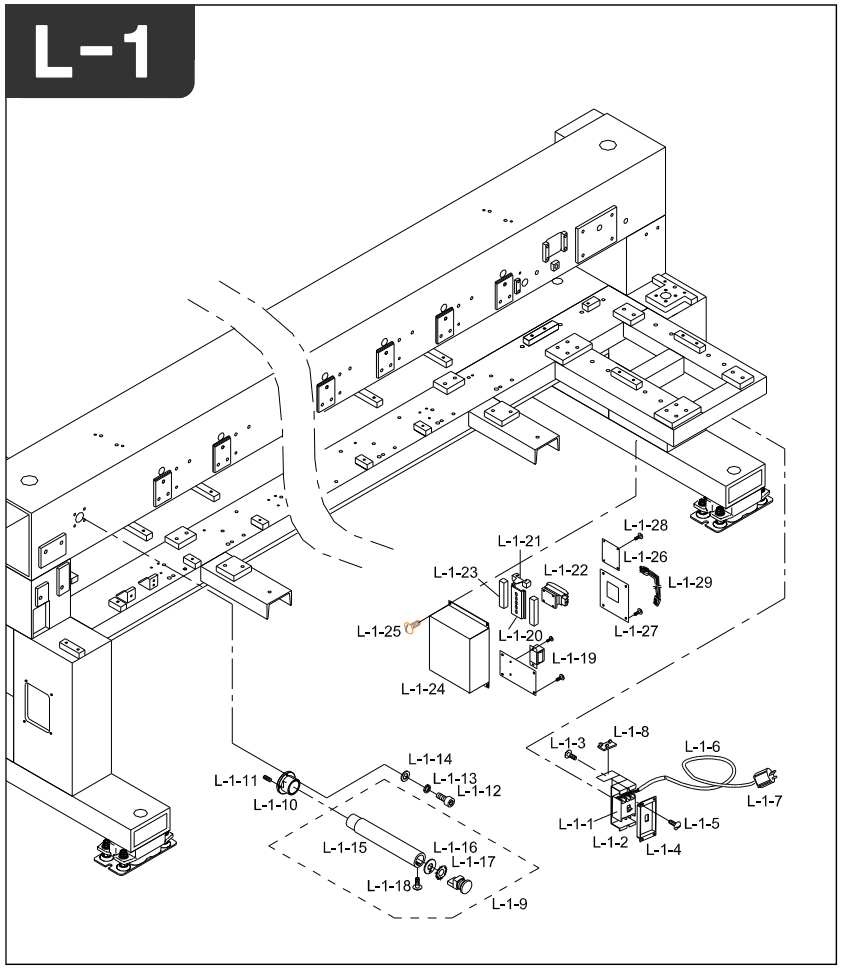

Note

Ref.No	Part No.	Part Name	Applied Period	Interchangeability	Hardware	Q'ty	Remark
L-1-27	BD-000304-02	MS Top Board	Jun,29,07 ~ Jan,04,08	△		1	
	BD-000304-03		Jan,04,08 ~ Sep,05,08	△			
	BD-000304-04		Sep,05,08 ~	△			
L-1-28	08076SC-7113	Hes.Socket Bolt(M5*L15)			O	4	
L-1-29	CA-000702-00	Main Power S/W Cable	Dec,03,05 ~ Oct,19,06	X		1	
	CA-000702-01		Oct,19,06 ~	△			

L

L-2

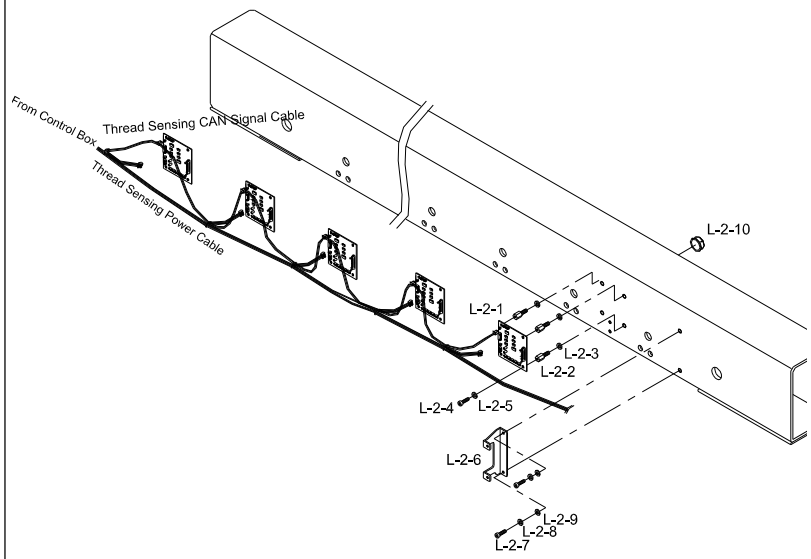

Note

Ref.No	Part No.	Part Name	Applied Period	Interchangeability	Hardware	Q'ty	Remark
L-2-1	BD-000232-00	Thread Sensing Board	Aug,16,05 ~ Sep,30,05	X		18	
	BD-000232-01		Sep,30,05 ~ Nov,03,05	△			
	BD-000232-02		Nov,03,05 ~ Feb,01,06	△			
	BD-000232-03		Feb,01,06 ~ Apr,26,06	△			
	BD-000232-04		Apr,26,06 ~ Jul,01,06	△			
	BD-000232-05		Jul,01,06 ~ Jul,15,06	△			
	BD-000232-06		Jul,15,06 ~ Sep,19,06	△			
	BD-000232-07		Sep,19,06 ~ Oct,20,06	△			
	BD-000232-08		Oct,20,06 ~ Sep,10,07	△			
	BD-000232-09		Sep,10,07 ~ Dec,13,07	△			
	BD-000232-10		Dec,13,07 ~ Dec,21,07	△			
	BD-000232-11		Dec,21,07 ~ Jul,30,08	△			
	BD-000232-12		Jul,30,08 ~ Aug,14,08	△			
	BD-000232-13		Aug,14,08 ~ Dec,12,08	△			
	BD-000232-14		Dec,12,08 ~	△			
L-2-2	11049SC-A001	Board Stud Bolt				72	
L-2-3	18048SW-3115	Spring Washer (@5)			O	72	
L-2-4	18154SC-9134	Plus Screw (M3*L8)			O	72	
L-2-5	11019SW-9115	Spring Washer (@3)			O	72	
L-2-6	02000400B000	CABLE COVER HOLDER				6	
L-2-7	08076SC-7113	Hex. Socket Bolt (M5*L12)			O	12	
L-2-8	18048SW-3115	Spring Washer (@5)			O	12	
L-2-9	16018SW-1111	Washer (@5)			O	12	
L-2-10	02017PM-A001	Cable Ring				18	

L

Con Box & OP Box

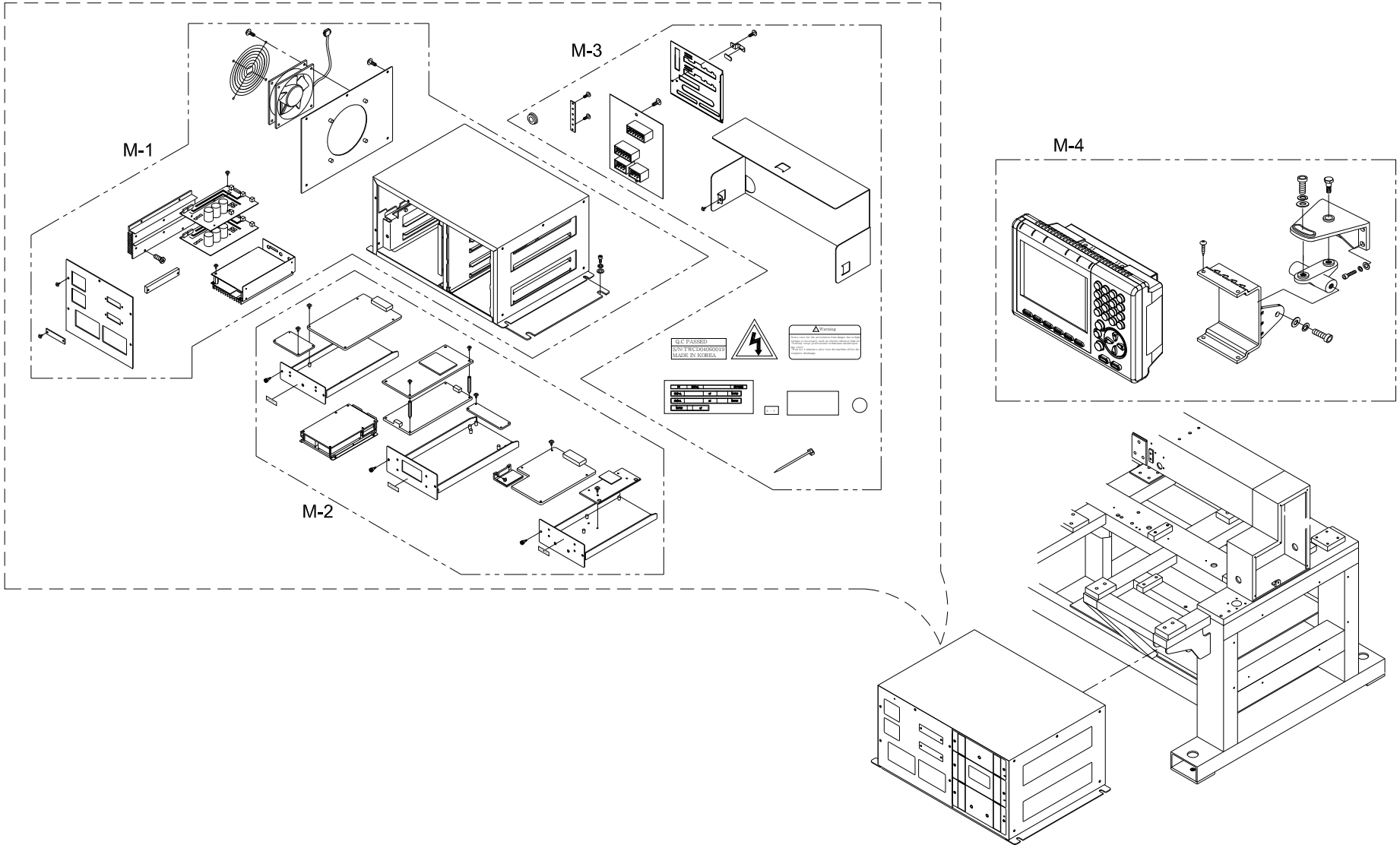

M-1

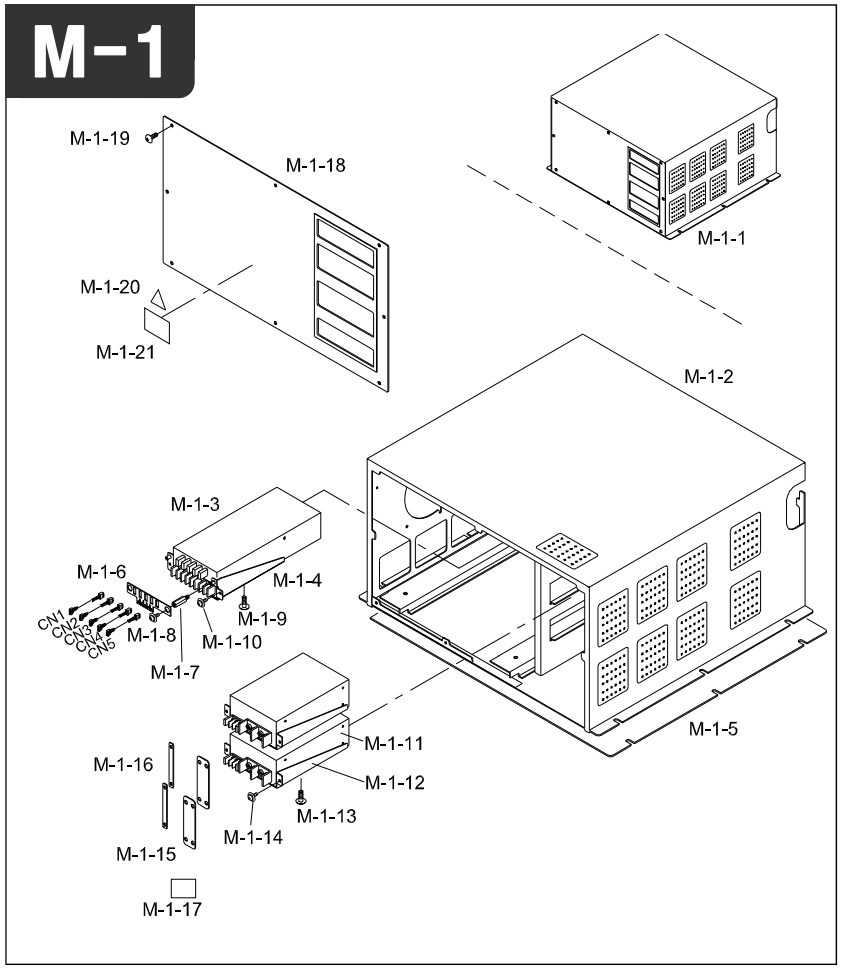

Note

Ref.No	Part No.	Part Name	Applied Period	Interchangeability	Hardware	Q'ty	Remark
M-1-1	SWF-00000364	Control Box Ass'y				1	
M-1-2	GP-013744-00	Control Box	Dec,14,05 ~ Jun,16,06	X		1	
	GP-013744-01		Jun,16,06 ~ Jan,30,07	△			
	GP-013744-02		Jan,30,07 ~	△			
M-1-3	GP-0007472-00	Digital SMPS				1	
M-1-4	GP-013749-00	SMPS Bracket(A)	Dec,14,05 ~	X		1	
M-1-5	GP-009455-00	Base Rubber	May,13,05 ~	X		2	
M-1-6	BD-000323-00	SMPS Connect Board	Dec,07,05 ~	X		1	
M-1-7	GP-010736-00	Stud for SMPS Connect Board	Jul,19,05 ~	X		3	
M-1-8	07-004S-SM5S	Fixing Screw for SMPS Connect Board(Set)			O	3	
M-1-9	07-004S-SM5S	Fixing Screw for Digital SMPS(Set)			O	2	
M-1-10	07-004S-SM5S	Fixing Screw for SMPS Bracket(A)(Set)			O	2	
M-1-11	EP-000015-00	24V SMPS	Oct,20,04 ~	X		2	
M-1-12	GP-009435-00	SMPS Bracket(B)	May,13,05 ~ Nov,17,05	X		1	
	GP-009435-01		Nov,17,05 ~	△			
M-1-13	07-004S-SM5S	Fixing Screw for 24V SMPS(Set)			O	4	
M-1-14	07-004S-SM5S	Fixing Screw for SMPS Bracket(B)(Set)			O	4	
M-1-15	GP-009453-00	Copper Plate for SMPS(A)	May,13,05 ~	X		4	
M-1-16	GP-009454-00	Copper Plate for SMPS(B)	May,13,05 ~	X		6	
M-1-17	09-023C-SC53	Q.C Passed Sticker				1	
M-1-18	GP-026495-00	Front Cover	Feb,08,07 ~	X		1	
M-1-19	10-003M-PT01	Fixing Screw for Front Cover(Truss)			O	8	
M-1-20	01-003S-BT01	Caution Sticker				1	
M-1-21	04-003S-AU10	Warning Sticker				1	

M

M-2

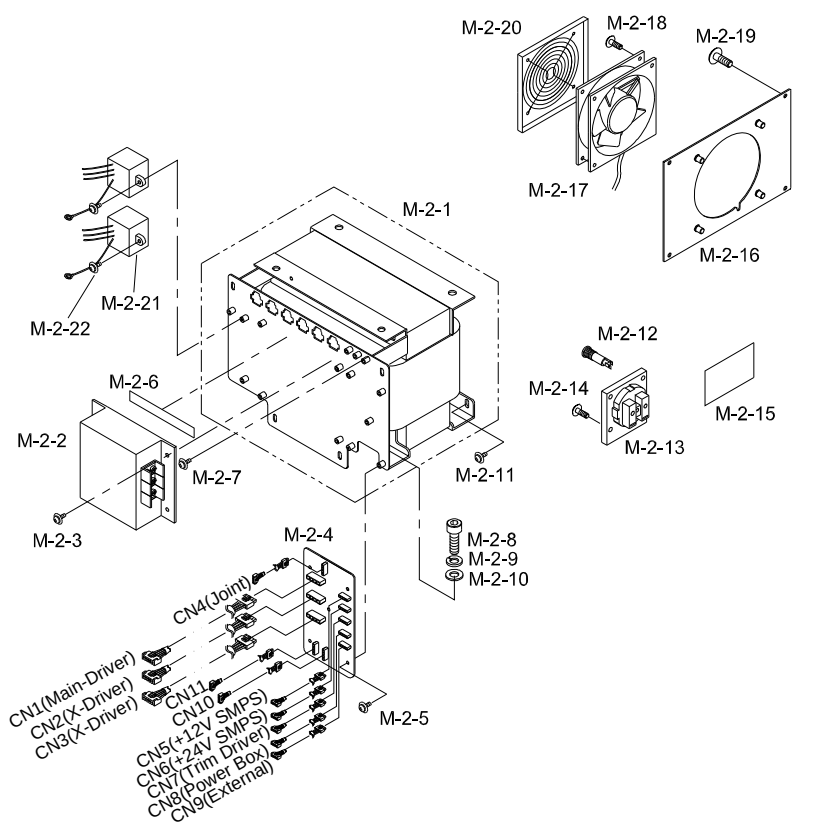

Note

Ref.No	Part No.	Part Name	Applied Period	Interchangeability	Hardware	Q'ty	Remark
M-2-1	AS-004284-00	Transformer Ass'y(Set)	Mar,13,06 ~ Jun,16,06	X		1	
	AS-004284-01		Jun,16,06 ~	△			
	EP-000046-00	Transformer	Aug,16,05 ~ Feb,06,06	X		1	
	EP-000046-01		Feb,06,06 ~	△			
	GP-009448-00	Fixing Bracket for Core(A)	May,13,05 ~	X		1	
	GP-009450-00	Fixing Bracket for Core(B)	May,13,05 ~	X		1	
	GP-013747-00	Fixing Bracket for Core(C)	Dec,14,05 ~ Jun,16,06	X		1	
	GP-013747-01		Jun,16,06 ~	△			
	GP-010149-00	Fixing Bracket for Core(D)	Jun,18,05 ~	X		1	
	GP-009451-00	Fixing Bracket for Connect Plate	May,13,05 ~	X		1	
	GP-009454-00	Copper Plate for SMPS(A)	May,13,05 ~	X		2	
	GP-009453-00	Copper Plate for SMPS(B)	May,13,05 ~	X		2	
	GP-013748-00	Connect Plate	Dec,14,05 ~	X		1	
	07-004S-SM5S	Fixing Screw for Connect Plate(Set)				4	
M-2-2	EP-000047-00	Noise Filter	Aug,16,05 ~	X		1	
M-2-3	07-004S-SM5S	Fixing Screw Noise Filter(Set)			O	4	
M-2-4	BD-000365-00	Connect Board	Feb,03,06 ~ Jul,04,06	X		1	
	BD-000365-01		Jul,04,06 ~	△			
M-2-5	07-004S-SM5S	Fixing Screw For Connect Board(Set)			O	4	
M-2-6	GP-015970-00	Input voltage Sticker	Feb,28,06 ~	X		1	
M-2-7	07-004S-SM5S	Ground Screw for Connect Plate(Set)				4	
M-2-8	10-016M-SW66	Fixing Screw for Transformer A			O	2	
M-2-9	10-003S-SW66	Spring Washer				2	
M-2-10	10-004S-SW66	Washer				2	
M-2-11	SC-000393-00	Fixing Screw for Transformer B	Jul,19,05 ~	X	O	2	
M-2-12	EP-000049-00	Fuse Holder	Aug,16,05 ~	X		1	
M-2-13	EP-000050-00	External Concept	Aug,16,05 ~ Jun,21,07	X		1	
	EP-000050-01		Jun,21,07 ~	△			
M-2-14	10-072S-SW70	Fixing Screw for External Concept			O	1	
M-2-15	01-004S-BT01	Fan Cleaning Sticker				1	
M-2-16	GP-009431-00	Side Cover	May,13,05 ~ Sep,30,05	X		1	
	GP-009431-01		Sep,30,05 ~	△			
M-2-17	EP-000048-00	Fan	Aug,16,05 ~	X		1	
M-2-18	01-002M-AU12	Fixing Screw for Fan			O	4	
M-2-19	10-003M-PT01	Fixing Screw for Side Cover(Truss)			O	4	
M-2-20	01-002B-AU12	FAN Cover				1	

M

M-2

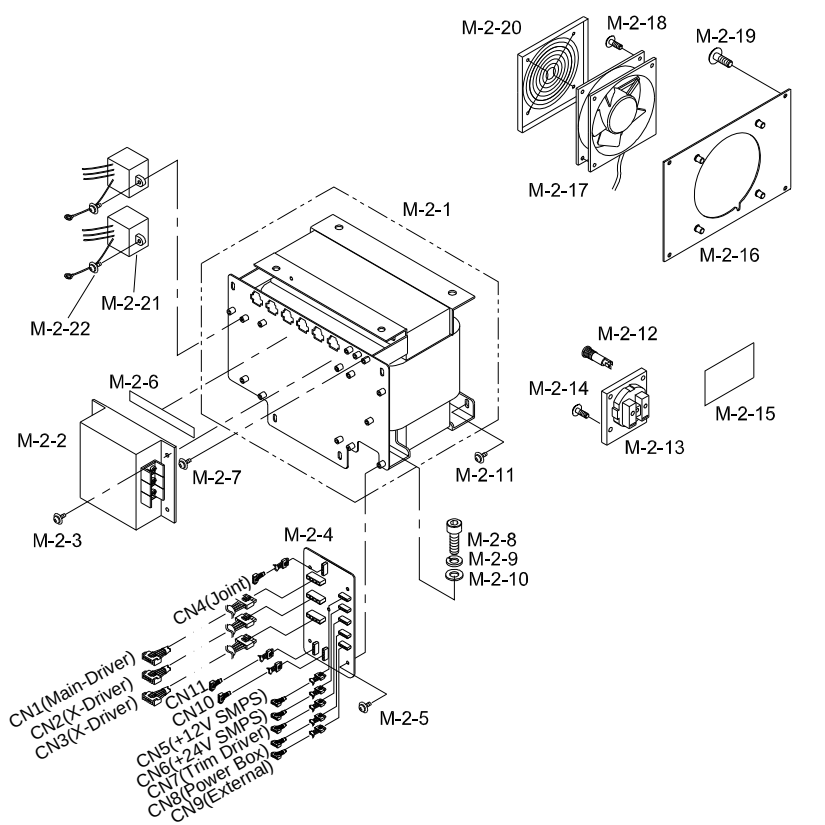

Note

Ref.No	Part No.	Part Name	Applied Period	Interchangeability	Hardware	Q'ty	Remark
M-2-21	BD-000168-00	Surge Protector	Jan,20,05 ~ Apr,19,05	X		2	
	BD-000168-01		Apr,19,05 ~ Jun,05,08	△			
	BD-000168-02		Jun,05,08 ~	△			
M-2-22	07-004S-SM5S	Fixing Screw for Surge Protector(Set)			O	2	

M

M-3

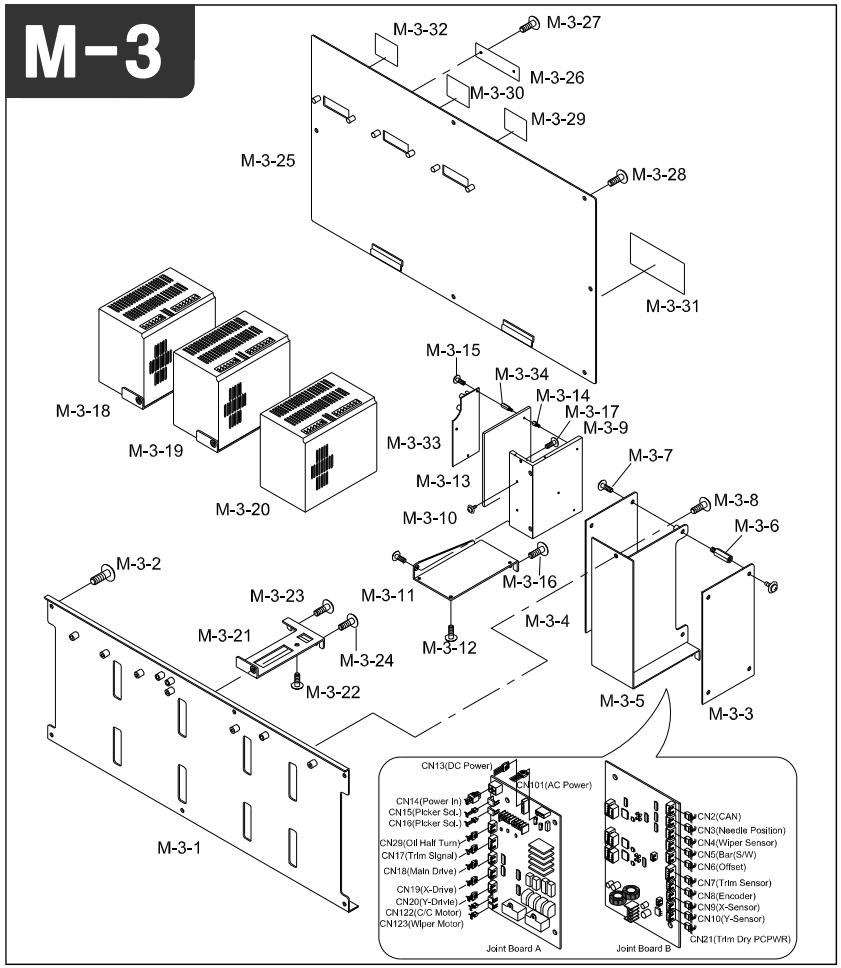

Note

Ref.No	Part No.	Part Name	Applied Period	Interchangeability	Hardware	Q'ty	Remark
M-3-1	GP-009445-00	Driver Fixing Plate	May,13,05 ~ Jun,16,06	X		1	
	GP-009445-01		Jun,16,06 ~ Oct,25,06	△			
	GP-009445-02		Oct,25,06 ~	△			
M-3-2	07-004S-SM5S	Fixing Screw for Driver Fixing Plate(Set)			O	6	
M-3-3	BD-000301-00	Joint Board(A), Joint Board(B)	Nov,23,05 ~ Jun,26,06	X		1	
M-3-4	BD-000301-01		Jun,26,06 ~ Aug,16,06	△			
	BD-000301-02		Aug,16,06 ~ Oct,19,06	△			
	BD-000301-03		Oct,19,06 ~ Apr,16,07	△			
	BD-000301-04		Apr,16,07 ~ May,23,07	△			
	BD-000301-05		May,23,07 ~ Jul,20,07	△			
	BD-000301-06		Jul,20,07 ~ Jan,08,08	△			
	BD-000301-07		Jan,08,08 ~ May,20,08	△			
	BD-000301-08		May,20,08 ~ Jul,16,08	△			
	BD-000301-09		Jul,16,08 ~ Aug,26,08	△			
	BD-000301-10		Aug,26,08 ~	△			
M-3-5	GP-009442-00	Fixing Bracket for Joint Board	May,13,05 ~ Sep,30,05	X	O	2	
	GP-009442-01		Sep,30,05 ~ Apr,03,08	△			
	GP-009442-02		Apr,03,08 ~	△			
M-3-6	10-012M-PT10	Stud for Joint Board				8	
M-3-7	10-021M-SW66	Fixing Screw for Joint Board(Set)			O	8	
M-3-8	07-004S-SM5S	Fixing Screw for J/B Fixing Bracket(Set)			O	1	
M-3-9	GP-012729-00	Radiator for Trimming Driver	Oct,14,05 ~	X		1	
M-3-10	06-001C-SE50	Fixing Screw for Trimming Driver Radiator(A)			O	6	
M-3-11	GP-009433-00	Fixing Bracket for Trimming Driver	May,13,05 ~	X	O	1	
M-3-12	10-004M-SW68	Fixing Screw for Trimming Driver Radiator(B)			O	3	
M-3-13	BD-000244-00	Trimming Driver(B)	Aug,17,05 ~ Oct,25,05	X		1	
	BD-000244-01		Oct,25,05 ~ Apr,06,06	△			
	BD-000244-02		Apr,06,06 ~ Sep,28,07	△			
	BD-000244-03		Sep,28,07 ~ Dec,03,07	△			
	BD-000244-04		Dec,03,07 ~ Jul,18,08	△			
	BD-000244-04		Jul,18,08 ~	△			
M-3-14	10-012M-PT10	Stud for Trimming Driver(B)				3	
M-3-15	10-021M-SW66	Fixing Screw for Trimming Driver (Set)			O	3	
M-3-16	07-004S-SM5S	Fixing Screw for Trimming Driver Bracket A(Set)			O	2	
M-3-17	10-042M-AU10	Fixing Screw for Trimming Driver BracketB(Set)			O	1	
M-3-18	EP-000124-00	Y-Driver	Feb,18,06 ~	X		1	
M-3-19	EP-000124-00	X-Driver	Feb,18,06 ~	X		1	

M-3

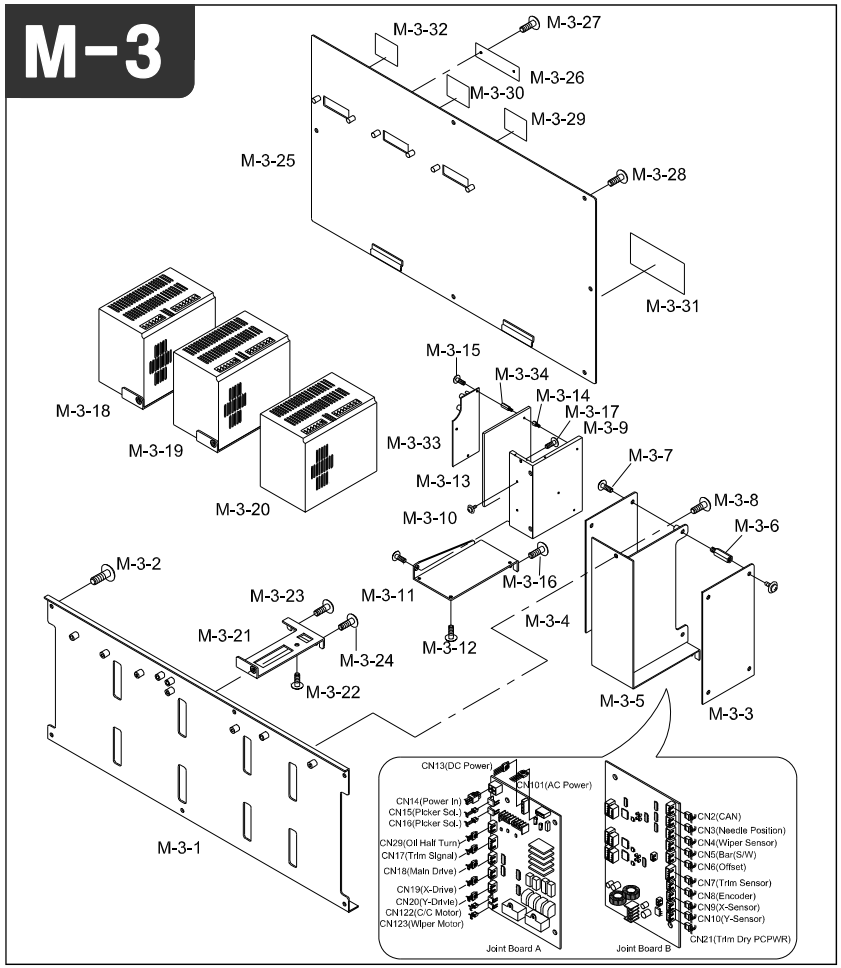

Note

Ref.No	Part No.	Part Name	Applied Period	Interchangeability	Hardware	Q'ty	Remark
M-3-20	EP-000124-00	Main Driver	Feb,18,06 ~	X		1	
M-3-21	GP-009434-00	Fixing Bracket for Drive	May,13,05 ~	X	O	2	
M-3-22	06-001C-SE50	Fixing Screw for Drive			O	4	
M-3-23	07-004S-SM5S	Fixing Screw for Drive Fixing Bracket A(Set)			O	4	
M-3-24	10-042M-AU10	Fixing Screw for Drive Fixing Bracket B(Set)			O	3	
M-3-25	GP-009441-00	Rear Cover	May,13,05 ~	X		1	
M-3-26	02-001B-SW67	Switch Cover				2	
M-3-27	SC-000395-00	Fixing Screw for Switch Cover(Truss)	Jul,21,05 ~	X	O	4	
M-3-28	10-003M-PT01	Fixing Screw for Rear Cover(Truss)			O	8	
M-3-29	GP-009833-00	Y-Driver Sticker	May,27,05 ~	X		1	
M-3-30	GP-009832-00	X-Driver Sticker	May,27,05 ~	X		1	
M-3-31	GP-016274-00	Inside Sticker	Mar,13,06 ~ Oct,25,06	X		1	
	GP-016274-01		Oct,25,06 ~	△			
M-3-32	GP-009831-00	Main Driver Sticker	May,27,05 ~	X		1	
M-3-33	BD-000244-00	Trimming Driver(A)	Aug,17,05 ~ Oct,25,05	X		1	
	BD-000244-01		Oct,25,05 ~ Apr,06,06	△			
	BD-000244-02		Apr,06,06 ~ Sep,28,07	△			
	BD-000244-03		Sep,28,07 ~ Dec,03,07	△			
	BD-000244-04		Dec,03,07 ~ Jul,18,08	△			
	BD-000244-05		Jul,18,08 ~	△			
M-3-34	08-002M-SW67	Stud for Trimming Driver(A)				3	

M

M-4

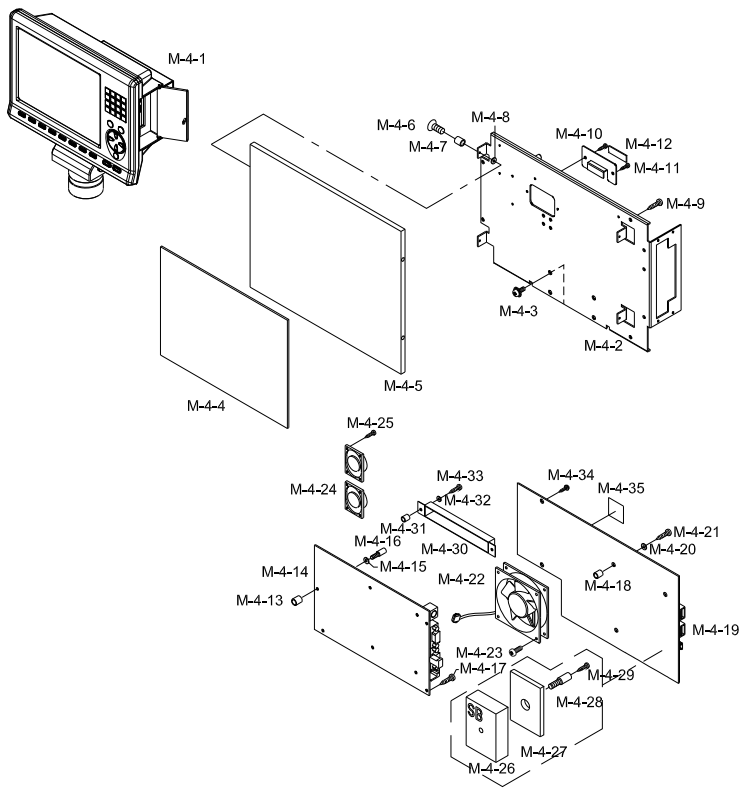

Note

Ref.No	Part No.	Part Name	Application date	Interchangeability	Hardware	Q'ty	Remarks
M-4-1	SWF-00000550	Operation Box Ass'y				1	
M-4-2	GP-014345-03	Base Plate				1	
M-4-3	07-004S-SM5S	Screw for Fixing Bracket for OP				4	
M-4-4	GP-014350-03	LCD Cover				1	
M-4-5	20-006A-SW70	LCD				1	
M-4-6	SC-000629-00	Screw for LCD (M2×L8)				4	
M-4-7	GP-019021-00	Insulation Bush(A)				4	
M-4-8	GP-019022-00	Insulation Bush(B)				4	
M-4-9	SC-000460-00	Screw for Base Plate				4	
M-4-10	01-002B-OT10	Pressing Plate for LCD				1	
M-4-11	20-002B-SW70	Connecting Pressing Plate Sponge				2	
M-4-12	10-028S-SC53	Screw for Pressing Plate (M3xL7)				2	
M-4-13	GP-014361-00	Insulation Bush(A)				6	
M-4-14	BD-000299-00	CPU Board				1	
M-4-15	GP-014362-00	Insulation Bush(B)				6	
M-4-16	GP-014341-03	CPU Board Fixing Stud				4	
M-4-17	07-005S-SM5S	CPU Board Screw (SET) (M3xL10)				2	
M-4-18	GP-014361-00	Insulation Bush(A)				6	
M-4-19	BD-000364-00	IO Board				1	
M-4-20	GP-014362-00	Insulation Bush(B)				4	
M-4-21	07-005S-SM5S	IO Board Fixing Screw (SET)				4	
M-4-22	EP-000030-00	FAN				1	
M-4-23	SC-000392-00	FAN Fixing Screw (M4xL30)				3	
M-4-24	01-016A-DU33	Speaker				2	
M-4-25	10-028S-SC53	Speaker Fixing Screw				4	
M-4-26	GP-017235-00	SB DDC Radiator				1	
M-4-27	GP-017239-00	SB DDC Radiator Sheet				1	
M-4-28	GP-010656-00	Fixing Stud for SB DDC Radiator				1	
M-4-29	10-028S-SC53	Fixing Screw for SB DDC Radiator(SET) (M3xL7)				1	
M-4-30	22027EL-A001	Inverter				1	
M-4-31	10-001C-AT10	Insulation Bush(A)				2	
	01-102B-OT10	Insulation Bush(B)				2	
M-4-33	10-028S-SC53	Inverter Fixing Plate (M3xL7)				2	
M-4-34	10-002S-SW66	IO Board 접지나사 (SET) (M3XL8)				2	
M-4-35	09-023C-SC53	QC Passed Sticker				1	

M

M-5

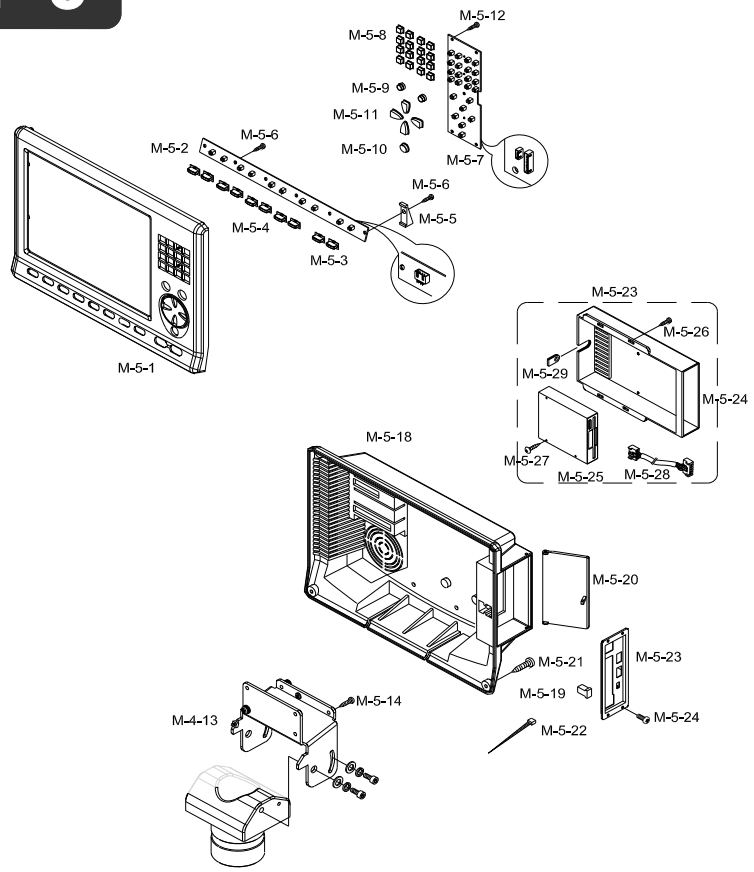

Note

Ref.No	Part No.	Part Name	Application date	Interchangeability	Hardware	Q'ty	Remarks
M-4-1	GP-014348-03	Front Cover				1	
M-4-2	BD-000347-01	F-KEY Board				1	
M-4-3	GP-014360-01	Button (START,STOP Key)				2	
M-4-4	GP-015068-02	Button (F Key)				8	
M-4-5	GP-015067-01	Angle Bushing				6	
M-4-6	SC-000747-00	F-KEY Board Screw (ST2.9xL12)				6	
M-4-7	BD-000346-00	C-KEY Board				1	
M-4-8	GP-014356-00	Button (Number Key)				16	
M-4-9	GP-014357-00	Button (DOWN,UP Key)				2	
M-4-10	GP-014359-00	Button (F-Speed Key)				1	
M-4-11	GP-015069-00	Button (Move Key)				4	
M-4-12	GP-014345-03	Base Plate				1	
M-4-13	GP-014343-00	Fixing Bracket for OP	Jan,06,06 ~ Mar.23.07	X		1	
	GP-014343-01		Mar.23.07 ~	△			
M-4-14	10-003M-PT01	Fixing Screw (M4xL8)			○	2	
M-4-18	GP-014349-00	Rear Cover				1	
M-4-19	01-003B-SW63	DOOR LOCK				1	
M-4-20	GP-014351-00	Connector Cover				1	
M-4-21	07-004S-SM5S	Rear Cover Fixing Screw (M4xL10)				4	
M-4-22	15-026M-1000	Cable Tie				5	
M-4-23	AS-004337-00	FDD Box (丞)				1	
M-4-24	GP-014441-01	FDD Box				1	
M-4-25	10-004A-SW70	FDD				1	
M-4-26	01-001S-NET1	Fixing Screw (M3xL6)				4	
M-4-27	SC-000545-00	FDD Fixing Screw (M3xL6)				2	
M-4-28	CA-001088-02	FDD Connecting Cable				1	
M-4-29	GP-014442-01	Cable Fixing Rubber				1	

M

Lamp & Switch

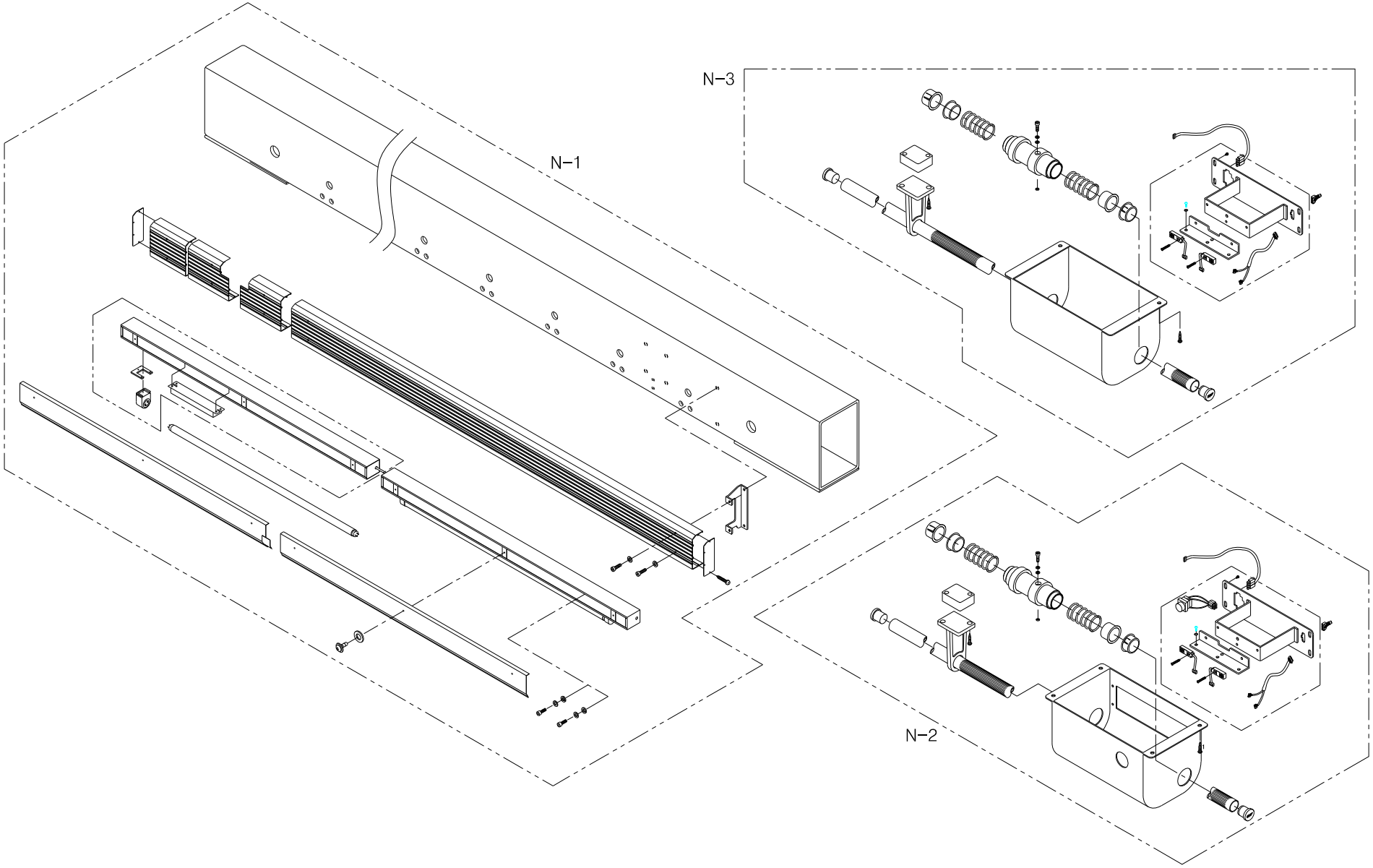

N-1

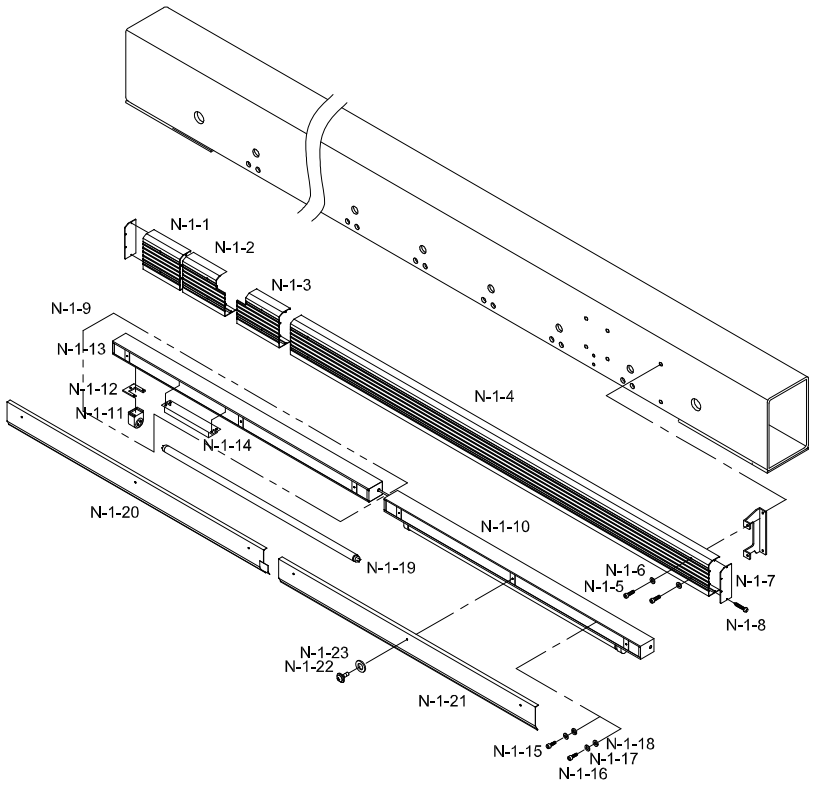

Note

Ref.No	Part No.	Part Name	Applied Period	Interchangeability	Hardware	Q'ty	Remark
N-1-1	02058AD-AB00	Cable Cover (A)				1	
N-1-2	02060AD-AH21	Cable Cover (B)				1	
N-1-3	02059AD-AH21	Cable Cover (C)				1	
N-1-4	12000100BHI0	Cable Cover (D)				1	
N-1-5	02031SC-7113	Hex. Socket Screw(M5*L10)			O	16	
N-1-6	18049SW-3111	Washer (@5)			O	16	
N-1-7	12000200B000	CABLE COVER PLATE				2	
N-1-8	02065SC-3328	Tapping Screw (M3*L10)				8	
N-1-9	AS-000449-00	Lamp Ass,Y	Jun,23,04 ~	X		1	
N-1-10	AS-000451-00	Lamp Ass,Y	Jun,23,04 ~	X		2	
N-1-11	20014ET-A001	Lamp Socket				8	
N-1-12	GP-009003-00	Lamp Socket Fixed Plate	Apr,30,05 ~	X		8	
N-1-13	20015PR-A001	Lamp Structure B				4	
N-1-14	09000700B000	BALLAST				4	
N-1-15	03016SC-4113	Hex. Socket Bolt (M5*L15)			O	16	
N-1-16	02031SC-7113	Hex. Socket Screw(M5*L10)			O	6	
N-1-17	18048SW-3115	Spring Washer (@5)			O	16	
N-1-18	16018SW-1111	Washer (@5)			O	16	
N-1-19	20009EL-B001	LAMP (32W)				4	
N-1-20	GP-052862-00	Reflecting (1)	Jul,01,11 ~	X		3	
N-1-21	GP-052861-00	Reflecting (2)	Jul,01,11 ~	X		2	
N-1-22	22025SC-9134	Screw (M4*L10)			O	12	
N-1-23	09200100B000	Washer (Pvc)				12	

N

N-2

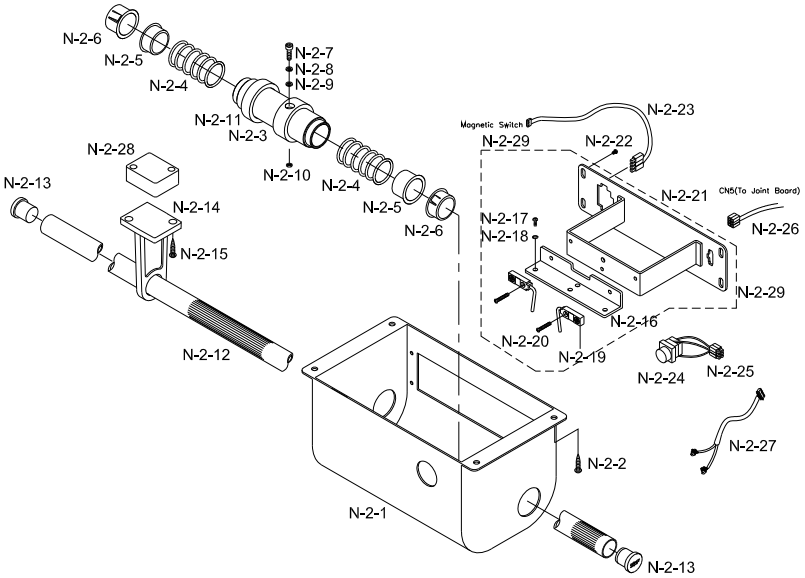

Note

Ref.No	Part No.	Part Name	Applied Period	Interchangeability	Hardware	Q'ty	Remark
N-2-1	GP-014250-00	Bar Switch Box (B)	Jan,03,06 ~	X		1	
N-2-2	19002SC-1330	Tapping Screw (4*L16-No1)			O	4	
N-2-3	GP-014251-00	Regulatory Rod	Jan,03,06 ~	X		1	
N-2-4	19012SP-B001	Return Spring				2	
N-2-5	05100800B000	S/W Bar Return Spring Guide				2	
N-2-6	19021PM-B001	S/W Bar Guide				2	
N-2-7	11021SC-4113	Hex. Socket Bolt (M4*L35)			O	1	
N-2-8	18014SW-3115	Spring Washer (@4-No2)			O	1	
N-2-9	18015SW-3111	Washer (4@)			O	1	
N-2-10	02029SN-9311	Hex. Nut (M4-No2)			O	1	
N-2-11	GP-014252-00	Bar Switch Sensing Ring	Jan,03,06 ~	X		1	
N-2-12	05100100B000	Switch Bar @19*@22 L6300				1	
N-2-13	05100300B000	Switch Bar Cap				2	
N-2-14	GP-010233-00	Bar S/W Support	Jun,27,05 ~	X		2	
N-2-15	19002SC-1330	Tapping Screw (4*L16-No1)			O	4	
N-2-16	GP-014253-00	Bar Switch Sensor Bracket	Jan,03,06 ~	X		2	
N-2-17		Screw				2	
N-2-18		Washer				2	
N-2-19	EP-000067-00	Sensor	Dec,12,05 ~	X		2	
N-2-20	19005SC-8118	Plus Screw (M3*L20)			O	4	
N-2-21	GP-016393-00	Bar Switch Box Cover(B)	Mar,17,06 ~	X		1	
N-2-22	02010SC-3123	Truss Screw (M4*L8)			O	4	
N-2-23	CA-000918-00	MS Top Board Cable	Feb,19,06 ~ Jul,11,06	X		1	
	CA-000918-01		Jul,11,06 ~	△			
N-2-24	09001100BT00	Magnetic Switch (SET) (1@)				1	
	09001110BT00	Magnetic Switch (SET)					
N-2-25	CA-000917-00	I/O S/W Connecting Connector	Feb,19,06 ~ Dec,21,06	X		1	
	CA-000917-01		Dec,21,06 ~	△			
N-2-26	CA-000322-00	Bar S/W To Joint Board Cable	Jul,16,05 ~	X		1	
N-2-27	CA-000321-00	Bar Sensor Cable	Jul,16,05 ~	X		1	
N-2-28	GP-014255-00	Bar Switch Holder Spacer	Jan,03,06 ~	X		5	
N-2-29	AS-004766-00	Bar Switch Sensor A Assy	Jun,05,06 ~	X		1	
	AS-004766-01		Apr,24,08 ~	△			

N

N-3

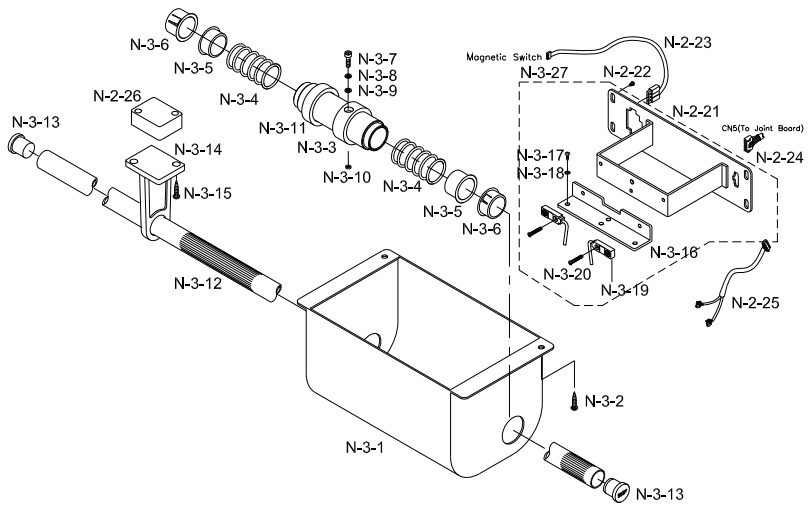

Note

Ref.No	Part No.	Part Name	Applied Period	Interchangeability	Hardware	Q'ty	Remark
N-3-1	GP-014899-00	Bar Switch Box (A)	Jan,03,06 ~	X		1	
N-3-2	19002SC-1330	Tapping Screw (4*L16-No1)			O	4	
N-3-3	GP-014251-00	Regulatory Rod	Jan,03,06 ~	X		1	
N-3-4	19012SP-B001	Return Spring				2	
N-3-5	05100800B000	S/W Bar Return Spring Guide				2	
N-3-6	19021PM-B001	S/W Bar Guide				2	
N-3-7	11021SC-4113	Hex. Socket Bolt (M4*L35)			O	1	
N-3-8	18014SW-3115	Spring Washer (@4-No2)			O	1	
N-3-9	18015SW-3111	Washer (4@)			O	1	
N-3-10	02029SN-9311	Hex. Nut (M4-No2)			O	1	
N-3-11	GP-014252-00	Bar Switch Sensing Ring	Jan,03,06 ~	X		1	
N-3-12	05100100B000	Switch Bar @19*@22 L6300				1	
N-3-13	05100300B000	Switch Bar Cap				2	
N-3-14	GP-010233-00	Bar S/W Support	Jun,27,05 ~	X		2	
N-3-15	19002SC-1330	Tapping Screw (4*L16-No1)			O	4	
N-3-16	GP-014253-00	Bar Switch Sensor Bracket	Jan,03,06 ~	X		2	
N-3-17		Screw				2	
N-3-18		Washer				2	
N-3-19	EP-000067-00	Sensor				1	
N-3-20	19005SC-8118	Plus Screw (M3*L20)			O	4	
N-3-21	GP-014254-00	Bar Switch Box Cover(C)	Jan,03,06 ~	X		1	
N-3-22	02010SC-3123	Truss Screw (M4*L8)			O	4	
N-3-23	CA-000918-00	MS Top Board Cable	Feb,19,06 ~ Jul,11,06	X		1	
	CA-000918-01		Jul,11,06 ~	△			
N-3-24	CA-000322-00	Bar S/W To Joint Board Cable	Jul,16,05 ~	X		1	
N-3-25	CA-000321-00	Bar Sensor Cable	Jul,16,05 ~	X		1	
N-3-26	GP-014255-00	Bar Switch Holder Spacer	Jan,03,06 ~	X		5	
N-3-27	AS-004767-00	Bar Switch Sensor B Assy	Jun,05,06 ~	X		1	

N

Bobbin Winder

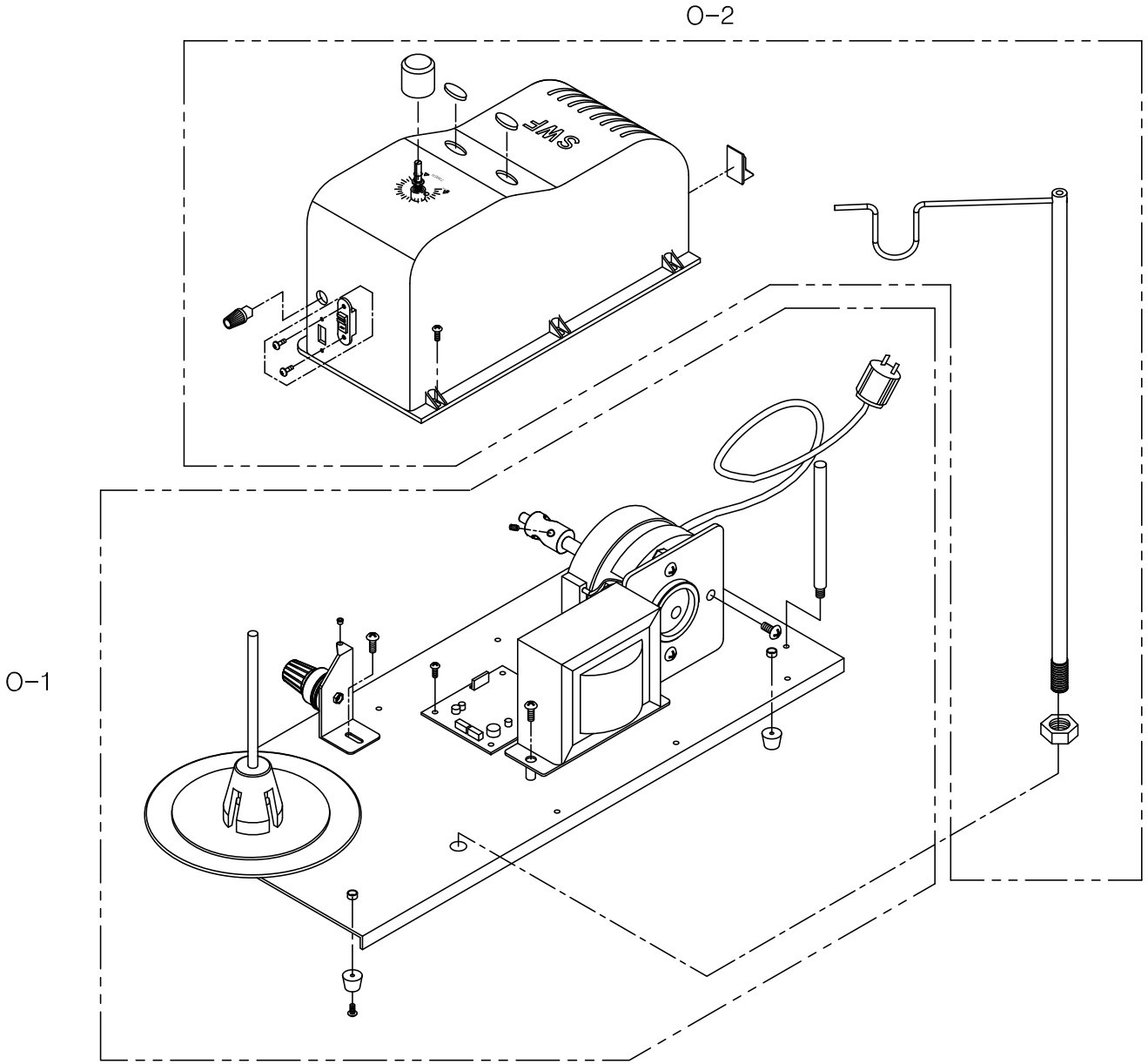

O-1

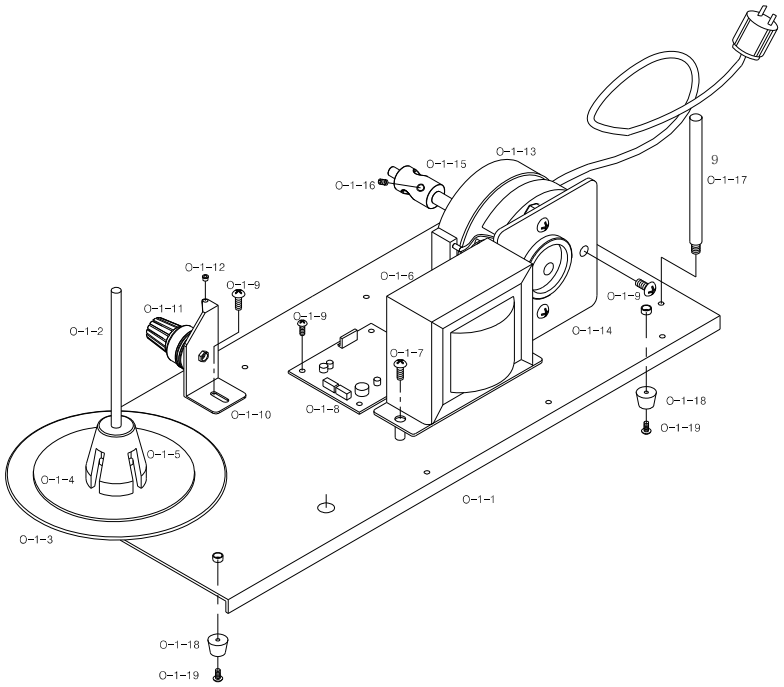

Note

Ref.No	Part No.	Part Name	Applied Period	Interchangeability	Hardware	Q'ty	Remark
O-1-1	GP-014870-00	Base	Jan,26,06 ~	X		1	
O-1-2	GP-014366-00	Spool Post	Jan,06,06 ~	X		1	
O-1-3	GP-014363-00	Spool Support Base	Jan,06,06 ~	X		1	
O-1-4	GP-014365-00	Spool Support Base Sponge	Jan,06,06 ~	X		1	
O-1-5	12012-PM-A001	Spool Holder				1	
O-1-6	EP-000078-00	Transformer A'ssy	Jan,19,06 ~	X		1	
O-1-7	18153SC-3123	Truss Screw (M4*L12)			O	2	
O-1-8	EP-000095-00	PCB (DW-BW01)	Feb,04,06 ~	X		1	
O-1-9	15042SC-3123	Truss Screw (M4*L6)			O	9	
O-1-10	GP-014370-00	Tension Control Holder	Jan,06,06 ~	X		1	
O-1-11	AS-003951-00	Thread Control Device Ass'y	Jan,12,06 ~	X		1	
O-1-12	05452CM-A001	Thread Guide Bushing				1	
O-1-13	MO-000029-00	Motor Ass'y	Jan,19,06 ~	X		1	
O-1-14	GP-014871-00	Motor Bracket	Jan,26,06 ~	X		1	
O-1-15	GP-014354-00	Bobbin Shaft	Jan,06,06 ~ Feb,27,06	X		1	
	GP-014354-01		Feb,27,06 ~ Mar,03,06	△			
	GP-014354-02		Mar,03,06 ~ Mar,09,06	△			
	GP-014354-03		Mar,09,06 ~	△			
O-1-16	SC-000173-00	Set Screw (M5*L4)			O	1	
O-1-17	02026SC-A001	Stand				1	
O-1-18	GP-014346-00	Rubber For Support Base	Jan,06,06 ~	X		4	
O-1-19	13054SC-3123	Truss Screw (M3*L8)			O	4	

O

O-2

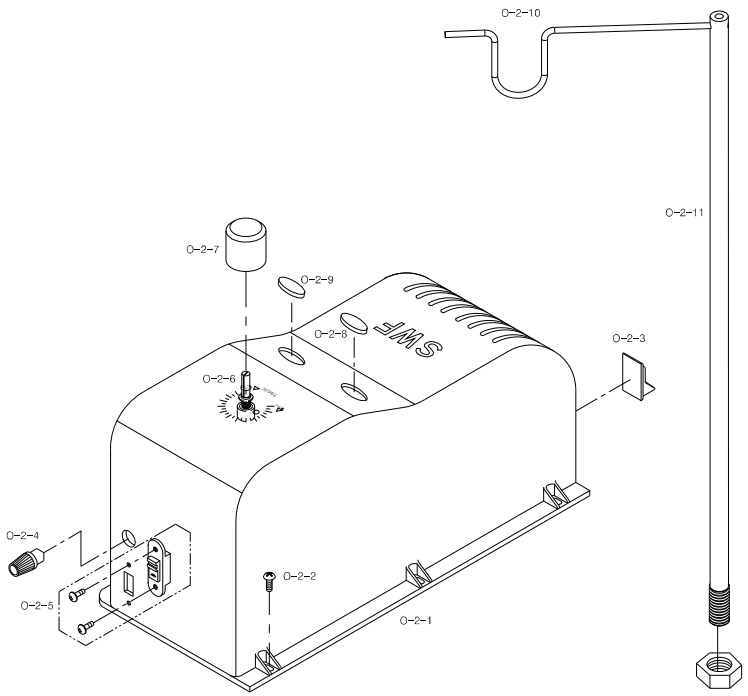

Note

Ref.No	Part No.	Part Name	Applied Period	Interchangeability	Hardware	Q'ty	Remark
O-2-1	GP-014869-01	Cover	Jan,26,06 ~	X		1	
O-2-2	18153SC-3123	Truss Screw (M4*L12)			O	6	
O-2-3	EP-000079-00	On / Off Switch	Jan,19,06 ~	X		1	
O-2-4	GP-014678-00	Fuse Holder	Jan,19,06 ~	X		1	
O-2-5	EP-000082-00	Switch (Select)	Jan,19,06 ~	X		1	
O-2-6	GP-014677-00	VR Knob	Jan,19,06 ~	X		1	
O-2-7	EP-000083-00	VR	Jan,19,06 ~	X		1	
O-2-8	EP-000080-00	Push Switch (Start)	Jan,19,06 ~	X		1	
O-2-9	EP-000081-00	Push Switch (Stop)	Jan,06,06 ~	X		1	
O-2-10	GP-014369-00	Antenna Bar Hanger	Jan,06,06 ~	X		2	
O-2-11	GP-014368-00	Antenna Bar				1	

O

Cover

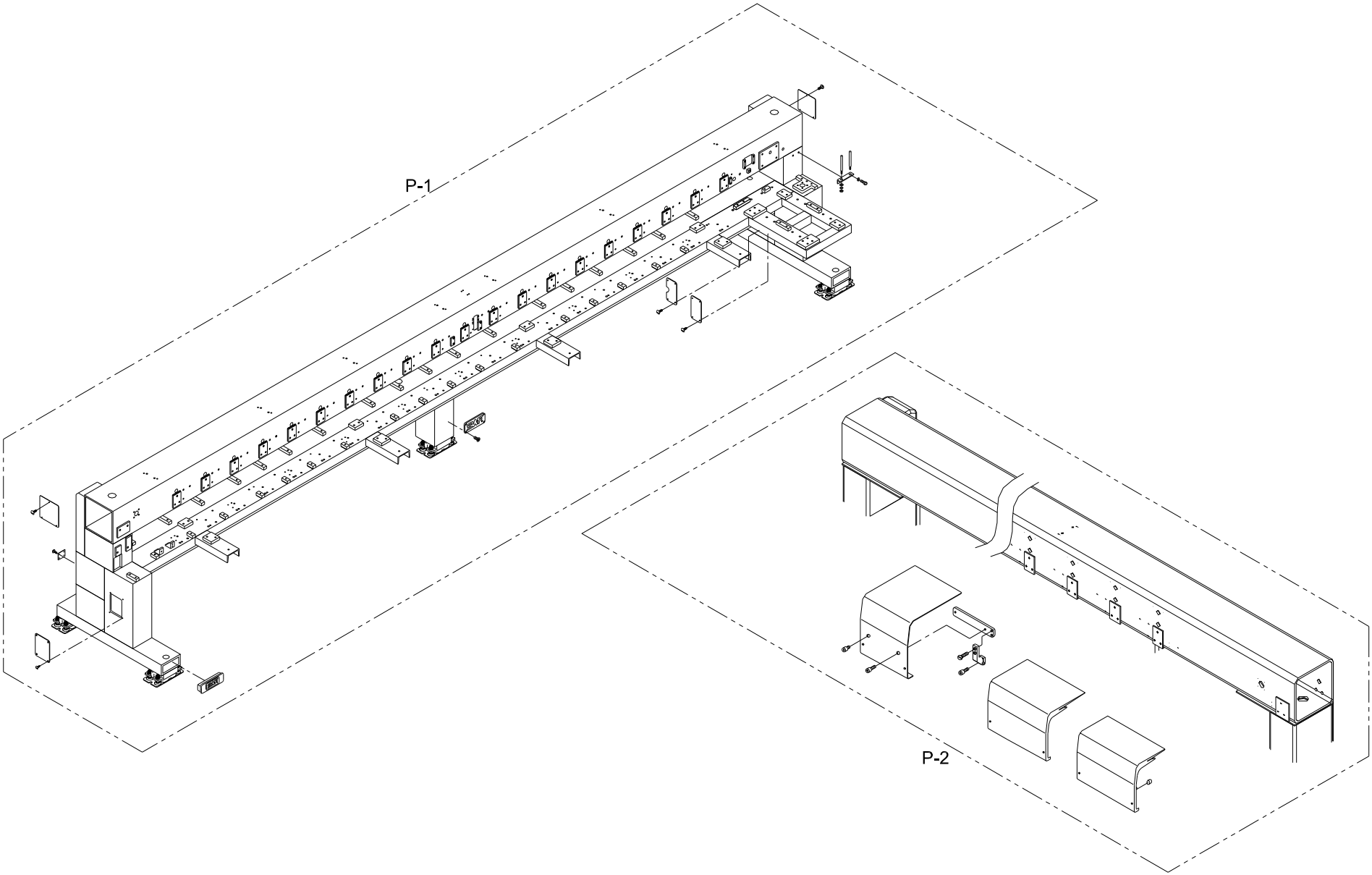

P-1

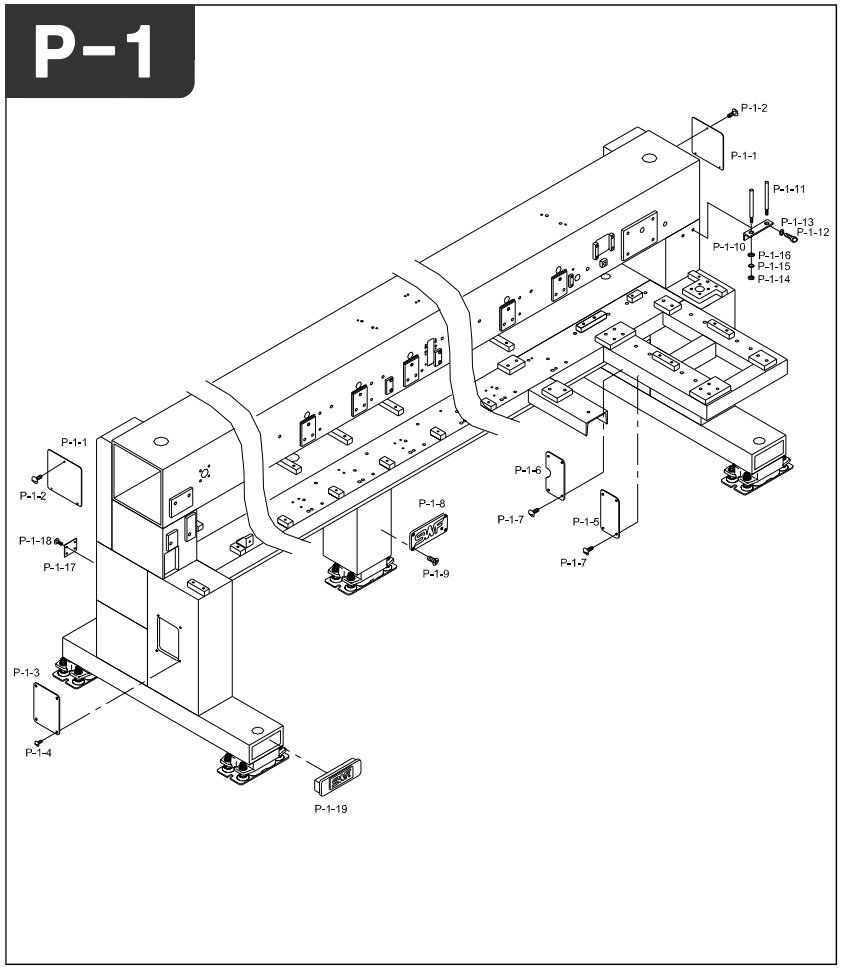

Note

Ref.No	Part No.	Part Name	Applied Period	Interchangeability	Hardware	Q'ty	Remark
P-1-1	12001100I000	BEAM SIDE COVER				2	
P-1-2	02044SC-3123	Truss Screw (M5*L8)			O	6	
P-1-3	12000610F000	Body Cover (B)				1	
P-1-4	02044SC-3123	Truss Screw (M5*L8)			O	4	
P-1-5	12100310B000	Body Cover (C)				2	
P-1-6	12001110BT00	Body Cover (D)				1	
P-1-7	02044SC-3123	Truss Screw (M5*L8)			O	12	
P-1-8	02001DC-A001	Brand Mark				1	
P-1-9	02002SC-7119	Pluss Screw (M4*L8)			O	4	
P-1-10	02025PR-A001	Bobbin Stand Bracket				1	
P-1-11	02026SC-A001	Bobbin Stand				2	
P-1-12	02031SC-7113	Hex. Socket Bolt (M5*L10)			O	2	
P-1-13	18049SW-3111	Washer (@5)			O	2	
P-1-14	02029SN-9311	Hex. Nut (M4)			O	2	
P-1-15	02028SW-9115	Spring Washer (@4)			O	2	
P-1-16	06003SW-2111	Washer (@4)			O	2	
P-1-17	02097ET-B001	Model Name Plate				1	
P-1-18	02010SC-3123	Truss Screw (M4*L8)			O	4	
P-1-19	12000100H000	Rubber For Body Support				4	

P

P-2

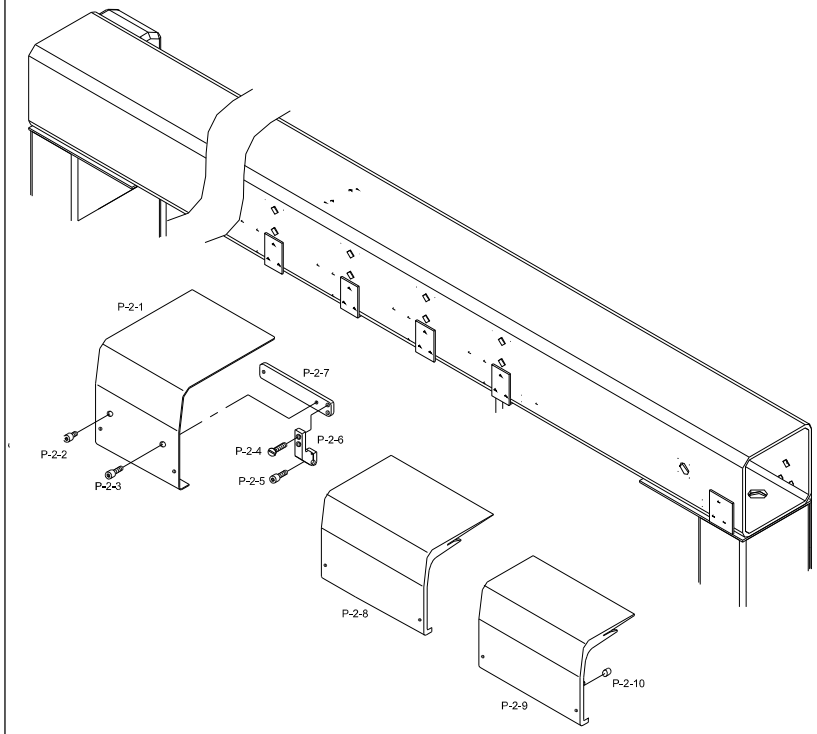

Note

Ref.No	Part No.	Part Name	Applied Period	Interchangeability	Hardware	Q'ty	Remark
P-2-1	02086PR-UI12	Top Shaft Cover(L)				1	
P-2-2	02014SC-7113	Hex. Socket Bolt (M4*L5)			O	1	
P-2-3	02015SC-7113	Hex. Socket Bolt (M4*L10)			O	1	
P-2-4	13048SC-A001	Bracket"A" Screw				2	
P-2-5	02015SC-7113	Hex. Socket Bolt (M4*L10)			O	1	
P-2-6	GP-011946-00	Color Change Bracket	Sep,14,05 ~	X		1	
P-2-7	09000200H000	TOP SHAFT COVER BRACKET (L)				1	
P-2-8	02021PM-AC00	Top Shaft Cover "A"				19	
P-2-9	02002PM-D092	Top Shaft Cover "B"				1	
P-2-10	02023ET-A001	Top Shaft Cover Magnet				40	

P

Frame (Y-Stroke 1000 Below)

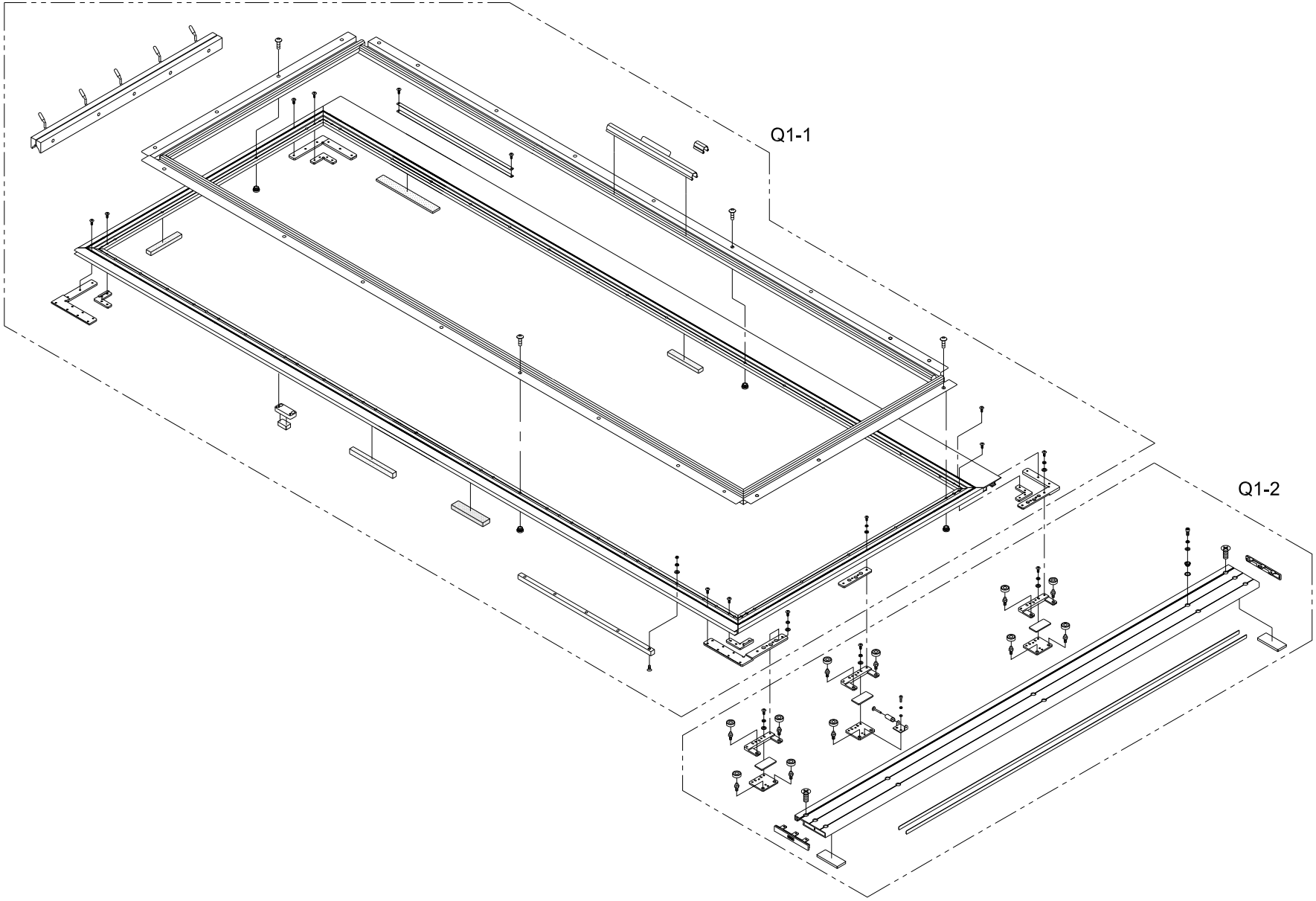

Q1-1

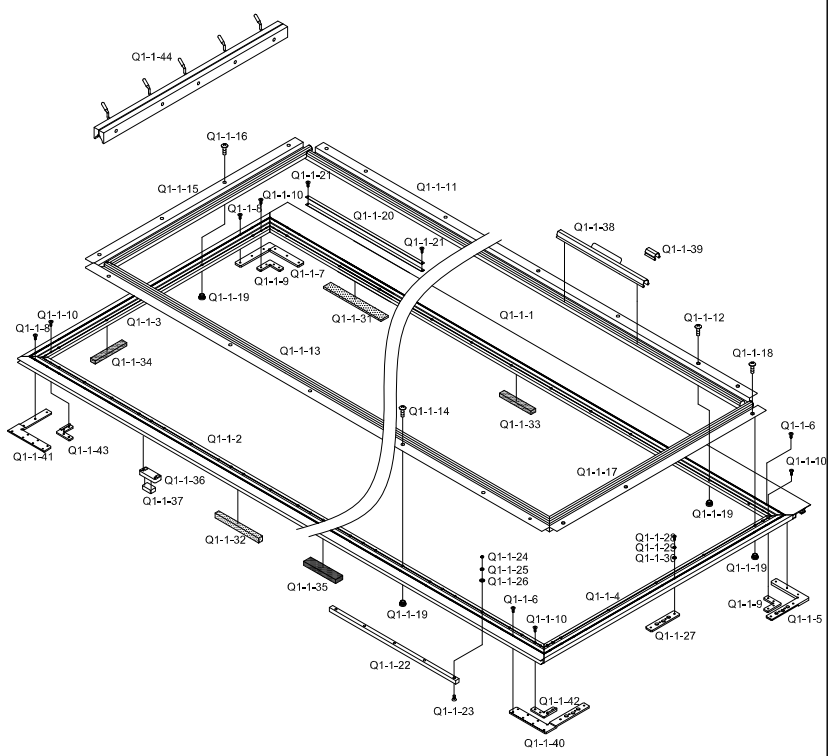

Note

Ref.No	Part No.	Part Name	Applied Period	Interchangeability	Hardware	Q'ty	Remark
Q1-1-1	10500700IDK0	Frame (A) [L=6276]				1	
Q1-1-2	10500800IDK0	Frame (B) [L=6276]				1	
Q1-1-3	10500900I004	Frame (D) [L=939]				1	
Q1-1-4	GP-037798-00	Frame (G) [L=939]	Mar,26,08 ~	X		1	
Q1-1-5	GP-030400-00	Corner Guide (A)	May,16,07 ~ Mar,26,08	X		1	
	GP-030400-01		Mar,26,08 ~	△			
Q1-1-6	18014SC-7113	Hex.Socket Bolt(M4*L10)			O	12	
Q1-1-7	GP-037803-00	Corner Guide (B)	Mar,06,08 ~	X		1	
Q1-1-8	18014SC-7113	Hex.Socket Bolt(M4*L10)			O	12	
Q1-1-9	GP-037737-00	Corner Guide (C)	Mar,24,08 ~	X		2	
Q1-1-10	18014SC-7113	Hex.Socket Bolt(M4*L10)			O	16	
Q1-1-11	10501410IDK0	Frame (C-1) [L=6121]				1	
Q1-1-12	SC-001903-00	Truss Screw (M4*L8)			O	41	
Q1-1-13	10501510IDK0	Frame (C-2) [L=6176]				1	
Q1-1-14	SC-001903-00	Truss Screw (M4*L8)			O	81	
Q1-1-15	10501610I004	Frame (C-3) [L=838.5]				1	
Q1-1-16	SC-001903-00	Truss Screw (M4*L8)			O	5	
Q1-1-17	10501710I004	Frame (C-4) [L=838.5]				1	
Q1-1-18	SC-001903-00	Truss Screw (M4*L8)			O	5	
Q1-1-19	GP-010409-00	Bushing Nut(C)	Jul,04,05 ~	X		88	
Q1-1-20	10501800ID00	Frame Guide Rail Plate A [L=439]				8	
Q1-1-21	18014SC-7113	Truss Screw (M4*L9)			O	16	
Q1-1-22	18050AF-A001	X-Axis Guide Rail (L400)				4	
	18051CW-AC30	X-Axis Guide Rail (L700)				4	
Q1-1-23	02010AF-3123	Hex.Socket Bolt(M4*L12)			O	20	
Q1-1-24	18151SN-8311	Cap Nut(@4)			O	20	
Q1-1-25	18014SW-3115	Spring Washer (@4)			O	20	
Q1-1-26	18015SW-3111	Washer (4@)			O	20	
Q1-1-27	GP-037813-00	Fixing Block (C) for Bearing	Mar,27,08 ~	X		1	
Q1-1-28	SC-000334-00	SCREW M4*L15	May,19,05 ~	X	O	4	
Q1-1-29	18014SW-3115	Spring Washer (@4-No2)			O	4	
Q1-1-30	18015SW-3111	Washer (4@)			O	4	
Q1-1-31	18068SF-AE00	Front Felt(H)				3	
Q1-1-32	GP-009936-00	Front Felt (O-1) (L=82.5)	Jun,07,05 ~	X		40	
Q1-1-33	18071SF-A001	Rear Felt (K) (L=135)				40	
Q1-1-34	18072SF-AD00	Rear Felt (L) (L=105)				4	
Q1-1-35	10501900I000	Felt(A)				17	

Q1-1

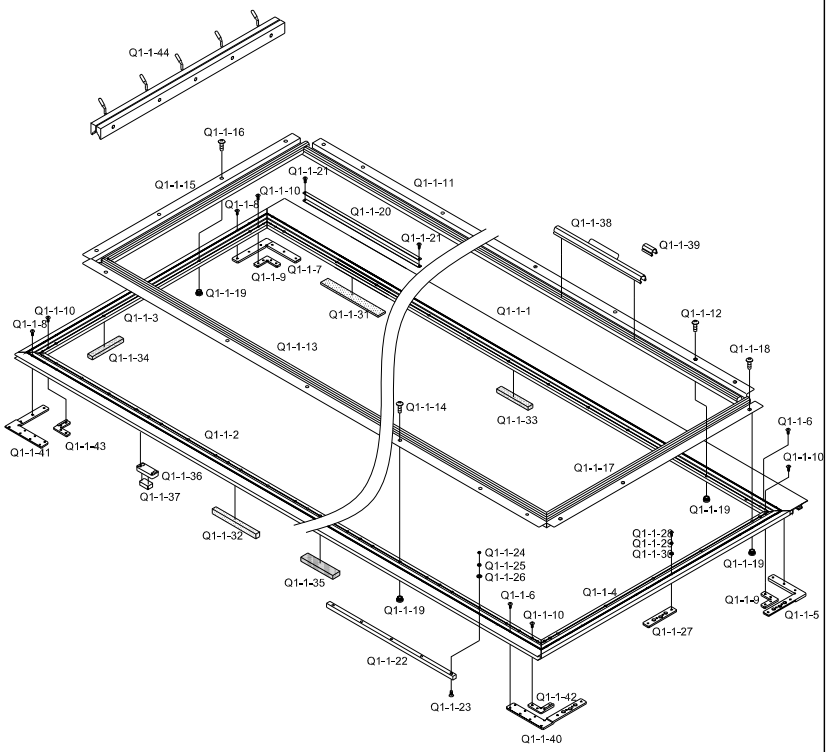

Note

Ref.No	Part No.	Part Name	Applied Period	Interchangeability	Hardware	Q'ty	Remark
Q1-1-36	10500200B000	FELT ATTACHMENT				10	
Q1-1-37	10500300B000	FRONT FELT (A)				10	
Q1-1-38	18084PR-A001	Clip [L=300mm]				42	
Q1-1-39	18086PR-B001	Frame Clip Support				84	
Q1-1-40	GP-009112-00	Corner Guide(DR)	May,10,05 ~ Mar,25,08	X		1	
	GP-009112-01		Mar,25,08 ~ Jun,05,08	△			
	GP-009112-02		Jun,05,08 ~	△			
Q1-1-41	GP-009111-00	Corner Guide(DL)	May,10,05 ~ Jun,05,08	X		1	
	GP-009111-01		Jun,05,08 ~	△			
Q1-1-42	GP-009114-00	Corner Guide(ER)	May,10,05 ~	X		1	
Q1-1-43	GP-009113-00	Corner Guide(EL)	May,10,05 ~	X		1	
Q1-1-44	18011BM-A021	Clip [L=750mm]				2	
Q1-1-45	AS-005695-00	Frame Assy	Nov,08,06 ~	X		1	

Q1

Q1-2

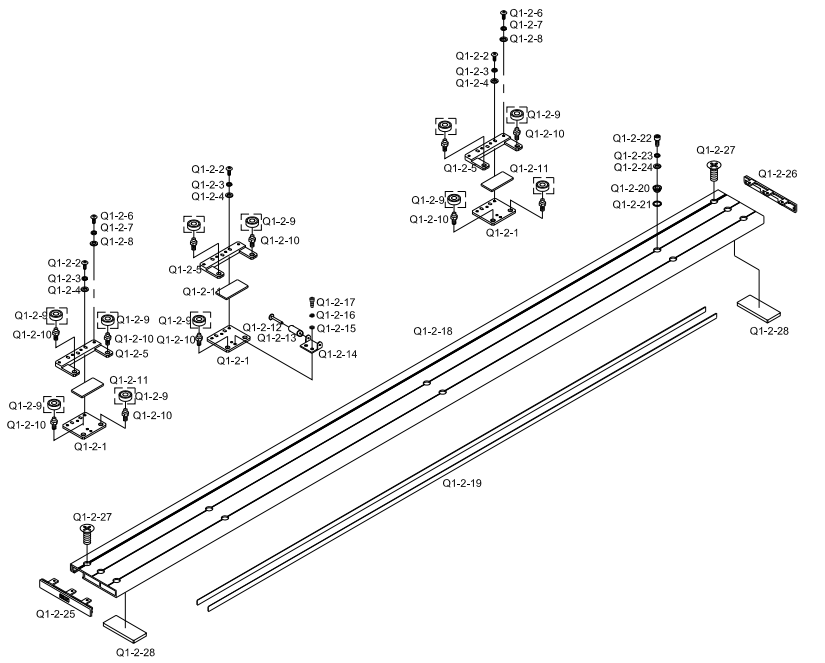

Note

Ref.No	Part No.	Part Name	Applied Period	Interchangeability	Hardware	Q'ty	Remark
Q1-2-1	GP-007190-00	BEARING CONNECTING BLOCK B	Jan,20,05 ~ Apr,07,05	X		3	
	GP-007190-01		Apr,07,05 ~ Mar,26,08	△			
	GP-007190-02		Mar,26,08 ~	△			
Q1-2-2	02023SC-7113	Hex.Socket Bolt(M4*L8)			O	9	
Q1-2-3	18014SW-3115	Spring Washer (@4-No2)			O	9	
Q1-2-4	18015SW-3111	Washer (4@)			O	9	
Q1-2-5	GP-037776-00	Fixing Block (A) for Bearing	Mar,25,08 ~ Apr,14,08	X		3	
	GP-037776-01		Apr,14,08 ~ May,26,08	△			
	GP-037776-02		May,26,08 ~	△			
Q1-2-6	07016SC-7113	Hex.Socket Bolt(M4*L12)			O	8	
Q1-2-7	18014SW-3115	Spring Washer (@4-No2)			O	8	
Q1-2-8	18015SW-3111	Washer (4@)			O	8	
Q1-2-9	15077BR-B001	Ball Bearing (LR606NPPU)			O	12	
Q1-2-10	18062CW-A021	Rail Guide Pin (B)				12	
Q1-2-11	GP-006546-00	FELT W	Dec,21,04 ~	X		3	
Q1-2-12	10510800B000	ROLLER PIN				3	
Q1-2-13	18107CW-B001	ROLLER				3	
Q1-2-14	18106PR-B001	ROLLER BRACKET				3	
Q1-2-15	18015SW-3111	WASHER (4@)			O	6	
Q1-2-16	18014SW-3115	SPRING WASHER (@4-NO2)			O	6	
Q1-2-17	02023SC-7113	HEX.SOCKET BOLT (M4*L8)			O	6	
Q1-2-18	GP-005282-00	Frame E [L=1659]	Oct,26,04 ~ Feb,20,07	X		1	
	GP-005282-01		Feb,20,07 ~ May,23,07	△			
	GP-005282-02		May,23,07 ~ Jul,25,07	△			
	GP-005282-03		Jul,25,07 ~	△			
Q1-2-19	10000600I004	Frame Guide Rail Plate				2	
Q1-2-20	10000700I000	Insert Bushing				6	
Q1-2-21	10000800I000	Insert Bushing Washer				6	
Q1-2-22	18014SC-7113	Truss Screw (M4*L9)			O	6	
Q1-2-23	16014SW-4115	Spring Washer (@6)			O	6	
Q1-2-24	08057SW-1111	Washer (@6)			O	6	
Q1-2-25	AS-001418-00	FRAME E ENDCAP(A)SET	Oct,26,04 ~ Apr,01,05	X		1	
	AS-001418-01		Apr,01,05 ~ Feb,20,07	△			
	AS-001418-02		Feb,20,07 ~ May,23,07	△			
	AS-001418-03		May,23,07 ~	△			
Q1-2-26	AS-001419-00	FRAME E ENDCAP B SET	Oct,26,04 ~ Apr,01,05	X		1	
	AS-001419-01		Apr,01,05 ~ Feb,20,07	△			

Q1-2

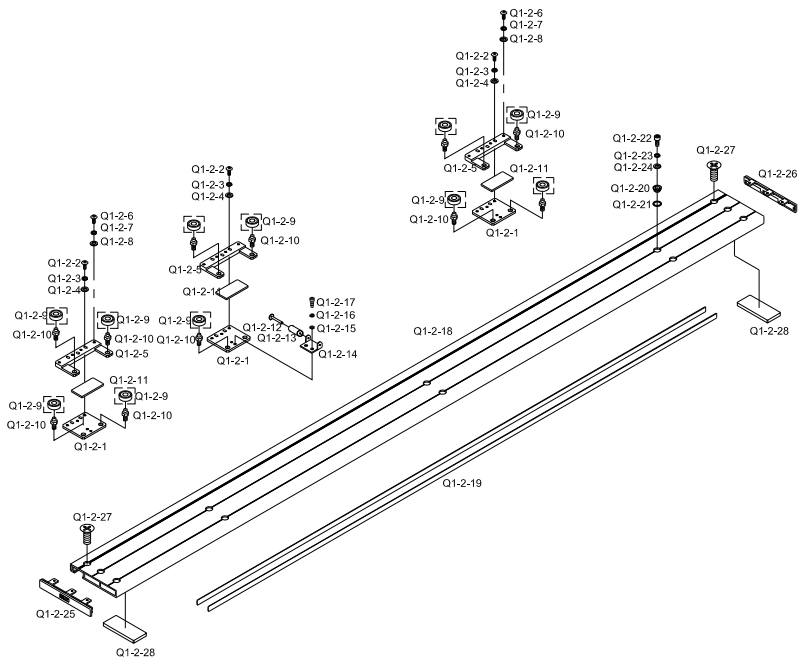

Note

Ref.No	Part No.	Part Name	Applied Period	Interchangeability	Hardware	Q'ty	Remark
Q1-2-26	AS-001419-02	FRAME E ENDCAP B SET	Feb,20,07 ~ May,23,07	△		1	
	AS-001419-03		May,23,07 ~	△			
Q1-2-27	10011SC-8119	PLUS SCREW (M3*L6)			O	6	
Q1-2-28	GP-006545-00	FELT V	Dec,21,04 ~	X		2	

Q1

Frame (Y-Stroke 1200 Above)

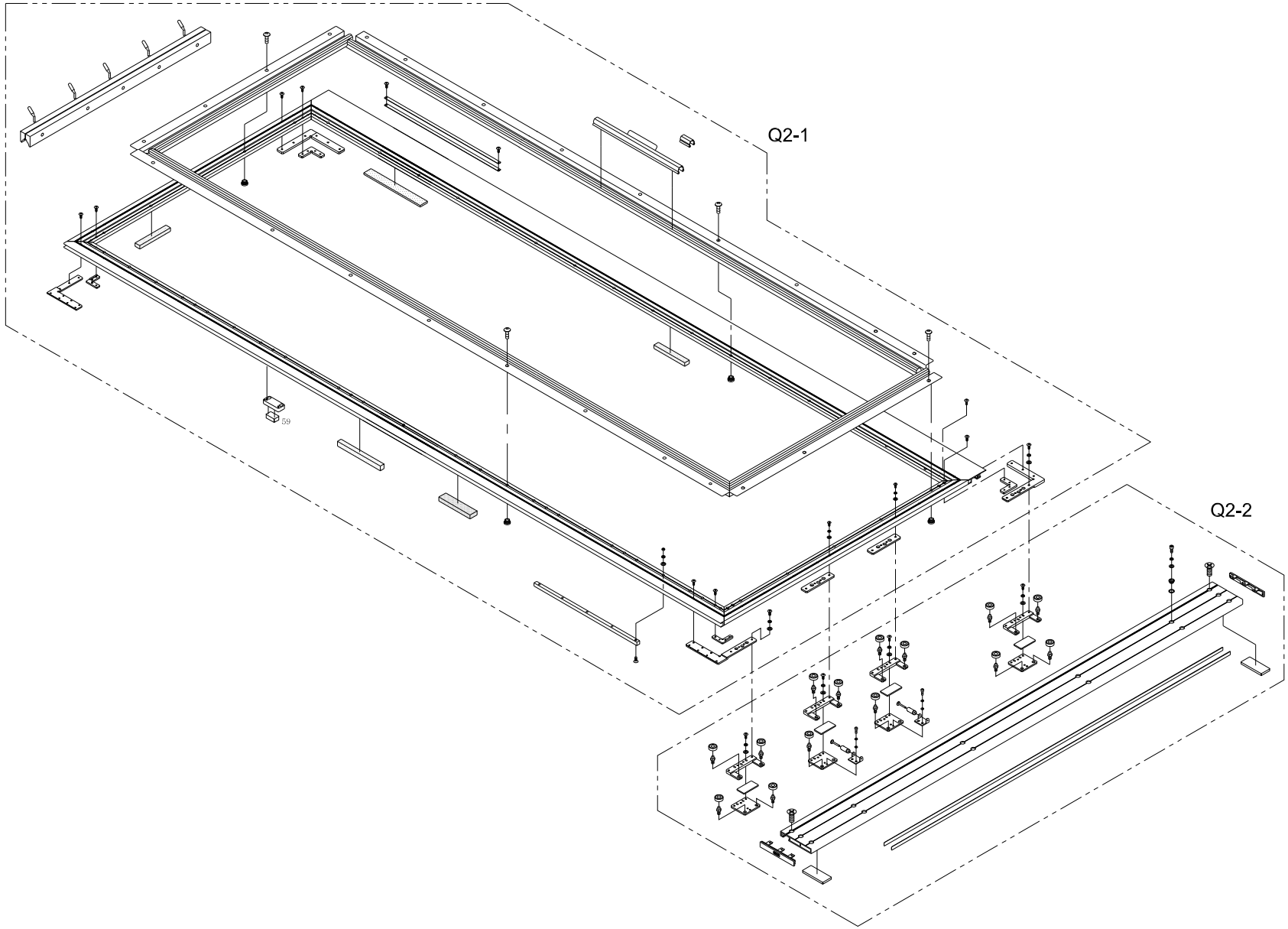

Q2-1

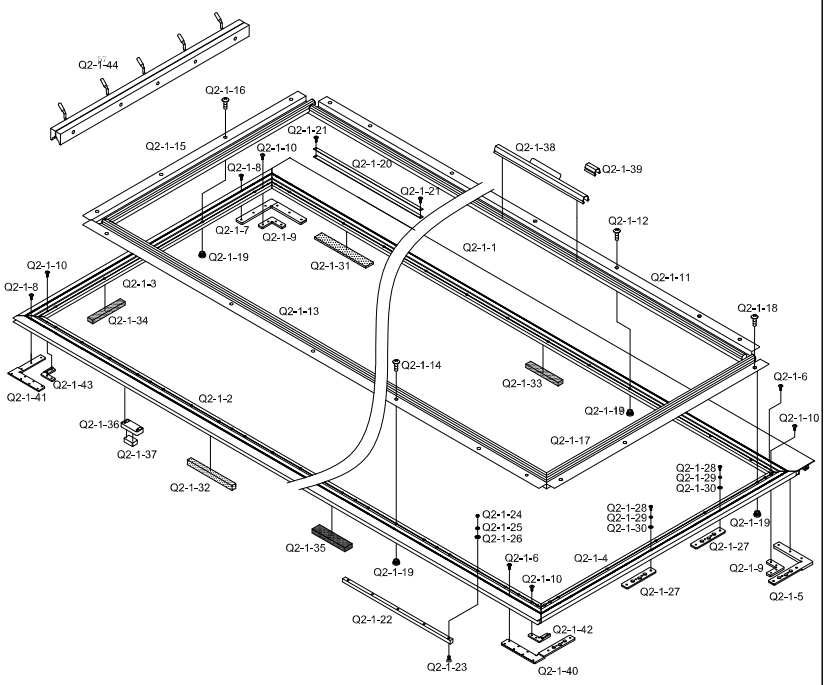

Note

Ref.No	Part No.	Part Name	Applied Period	Interchangeability	Hardware	Q'ty	Remark
Q2-1-1	10500700IDK0	Frame (A) [L=6276]				1	
Q2-1-2	10500800IDK0	Frame (B) [L=6276]				1	
Q2-1-3	10500900I004	Frame (D) [L=939]				1	
Q2-1-4	GP-037798-00	Frame (G) [L=939]	Mar,26,08 ~	X		1	
Q2-1-5	GP-030400-00	Corner Guide (A)	May,16,07 ~ Mar,26,08	X		1	
	GP-030400-01		Mar,26,08 ~	△			
Q2-1-6	18014SC-7113	Hex.Socket Bolt(M4*L10)			O	12	
Q2-1-7	GP-037803-00	Corner Guide (B)	Mar,26,08 ~	X		1	
Q2-1-8	18014SC-7113	Hex.Socket Bolt(M4*L10)			O	12	
Q2-1-9	GP-037737-00	Corner Guide (C)	Mar,24,08 ~	X		2	
Q2-1-10	18014SC-7113	Hex.Socket Bolt(M4*L10)			O	16	
Q2-1-11	10501410IDK0	Frame (C-1) [L=6121]				1	
Q2-1-12	SC-001903-00	Truss Screw (M4*L8)			O	41	
Q2-1-13	10501510IDK0	Frame (C-2) [L=6176]				1	
Q2-1-14	SC-001903-00	Truss Screw (M4*L8)			O	81	
Q2-1-15	10501610I004	Frame (C-3) [L=838.5]				1	
Q2-1-16	SC-001903-00	Truss Screw (M4*L8)			O	7	
Q2-1-17	10501710I004	Frame (C-4) [L=838.5]				1	
Q2-1-18	SC-001903-00	Truss Screw (M4*L8)			O	7	
Q2-1-19	GP-010409-00	Bushing Nut(C)	Jul,04,05 ~	X		88	
Q2-1-20	10501800ID00	Frame Guide Rail Plate A [L=439]				8	
Q2-1-21	18014SC-7113	Truss Screw (M4*L9)			O	16	
Q2-1-22	18050AF-A001	X-Axis Guide Rail (L400)				4	
	18051CW-AC30	X-Axis Guide Rail (L700)				4	
Q2-1-23	02010AF-3123	Hex.Socket Bolt(M4*L12)			O	20	
Q2-1-24	18151SN-8311	Cap Nut(@4)			O	20	
Q2-1-25	18014SW-3115	Spring Washer (@4)			O	20	
Q2-1-26	18015SW-3111	Washer (4@)			O	20	
Q2-1-27	GP-037813-00	Fixing Block (C) for Bearing	Mar,27,08 ~	X		2	
Q2-1-28	SC-000334-00	SCREW M4*L15	May,19,05 ~	X	O	8	
Q2-1-29	18014SW-3115	Spring Washer (@4-No2)			O	8	
Q2-1-30	18015SW-3111	Washer (4@)			O	8	
Q2-1-31	18068SF-AE00	Front Felt(H)				3	
Q2-1-32	GP-009936-00	Front Felt (O-1) (L=82.5)	Jun,07,05 ~	X		40	
Q2-1-33	18071SF-A001	Rear Felt (K) (L=135)				40	
Q2-1-34	18072SF-AD00	Rear Felt (L) (L=105)				4	
Q2-1-35	10501900I000	Felt(A)				17	

Q2-1

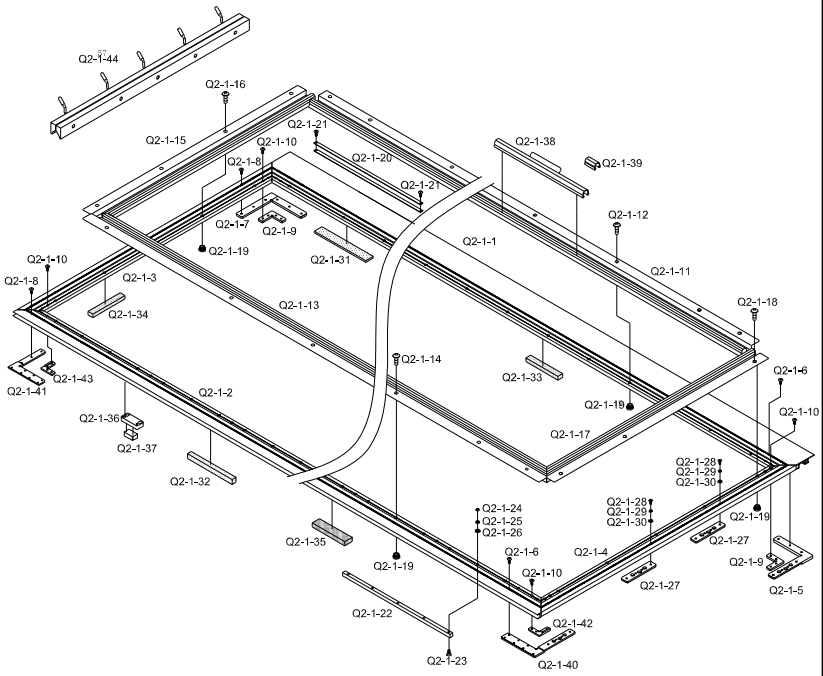

Note

Ref.No	Part No.	Part Name	Applied Period	Interchangeability	Hardware	Q'ty	Remark
Q2-1-36	10500200B000	FELT ATTACHMENT				10	
Q2-1-37	10500300B000	FRONT FELT (A)				10	
Q2-1-38	18084PR-A001	Clip [L=300mm]				42	
Q2-1-39	18086PR-B001	Frame Clip Support				84	
Q2-1-40	GP-009112-00	Corner Guide(DR)	May,10,05 ~ Mar,25,08	X		1	
	GP-009112-01		Mar,25,08 ~ Jun,05,08	△			
	GP-009112-02		Jun,05,08 ~	△			
Q2-1-41	GP-009111-00	Corner Guide(DL)	May,10,05 ~ Jun,05,08	X		1	
	GP-009111-01		Jun,05,08 ~	△			
Q2-1-42	GP-009114-00	Corner Guide(ER)	May,10,05 ~	X		1	
Q2-1-43	GP-009113-00	Corner Guide(EL)	May,10,05 ~	X		1	
Q2-1-44	18011BM-A021	Clip [L=750mm]				2	
Q2-1-45	1051001BEK9	Frame Assy				1	

Q2

Q2-2

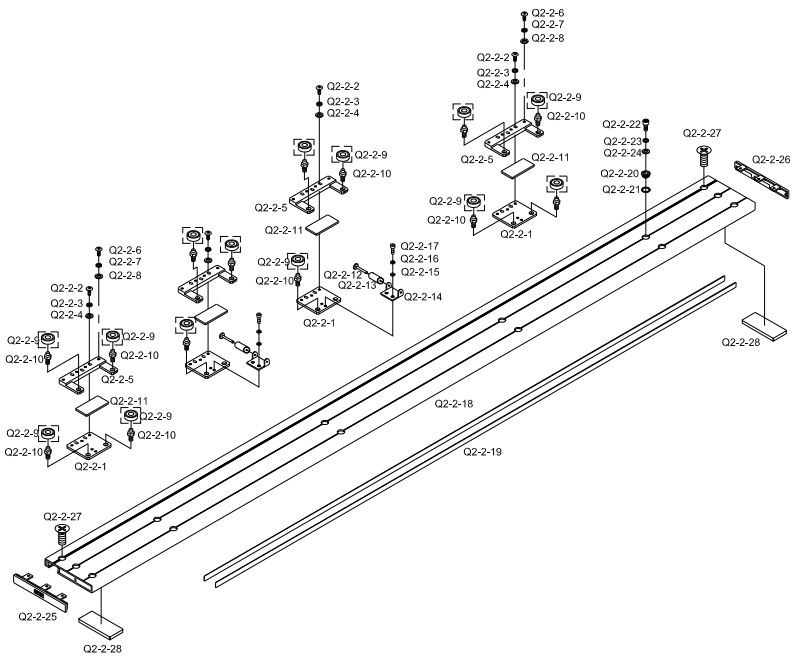

Note

Ref.No	Part No.	Part Name	Applied Period	Interchangeability	Hardware	Q'ty	Remark
Q2-2-1	GP-007190-00	BEARING CONNECTING BLOCK B	Jan,20,05 ~ Apr,07,05	X		4	
	GP-007190-01		Apr,07,05 ~ Mar,26,08	△			
	GP-007190-02		Mar,26,08 ~	△			
Q2-2-2	02023SC-7113	Hex.Socket Bolt(M4*L8)				12	
Q2-2-3	18014SW-3115	Spring Washer (@4-No2)				12	
Q2-2-4	18015SW-3111	Washer (4@)				12	
Q2-2-5	GP-037776-00	Fixing Block (A) for Bearing	Mar,25,08 ~ Apr,14,08	X		4	
	GP-037776-01		Apr,14,08 ~ May,26,08	△			
	GP-037776-02		May,26,08 ~	△			
Q2-2-6	07016SC-7113	Hex.Socket Bolt(M4*L12)				8	
Q2-2-7	18014SW-3115	Spring Washer (@4-No2)				8	
Q2-2-8	18015SW-3111	Washer (4@)				8	
Q2-2-9	15077BR-B001	Ball Bearing (LR606NPPU)				16	
Q2-2-10	18062CW-A021	Rail Guide Pin (B)				16	
Q2-2-11	GP-006546-00	FELT W	Dec,21,04 ~	X		4	
Q2-2-12	10510800B000	ROLLER PIN				4	
Q2-2-13	18107CW-B001	ROLLER				4	
Q2-2-14	18106PR-B001	ROLLER BRACKET				4	
Q2-2-15	18015SW-3111	WASHER (4@)				8	
Q2-2-16	18014SW-3115	SPRING WASHER (@4-NO2)				8	
Q2-2-17	02023SC-7113	HEX.SOCKET BOLT (M4*L8)				8	
Q2-2-18	GP-006161-00	Frame E [L=1659]	Dec,09,04 ~ Feb,20,07	X		1	
	GP-006161-01		Feb,20,07 ~ May,23,07	△			
	GP-006161-02		May,23,07 ~ Jul,25,07	△			
	GP-006161-03		Jul,25,07 ~	△			
Q2-2-19	10000600I004	Frame Guide Rail Plate				2	
Q2-2-20	10000700I000	Insert Bushing				6	
Q2-2-21	10000800I000	Insert Bushing Washer				6	
Q2-2-22	18014SC-7113	Truss Screw (M4*L9)				6	
Q2-2-23	16014SW-4115	Spring Washer (@6)				6	
Q2-2-24	08057SW-1111	Washer (@6)				6	
Q2-2-25	AS-001418-00	FRAME E ENDCAP(A)SET	Oct,26,04 ~ Apr,01,05	X		1	
	AS-001418-01		Apr,01,05 ~ Feb,20,07	△			
	AS-001418-02		Feb,20,07 ~ May,23,07	△			
	AS-001418-03		May,23,07 ~	△			
Q2-2-26	AS-001419-00	FRAME E ENDCAP B SET	Oct,26,04 ~ Apr,01,05	X		1	
	AS-001419-01		Apr,01,05 ~ Feb,20,07	△			

Q2-2

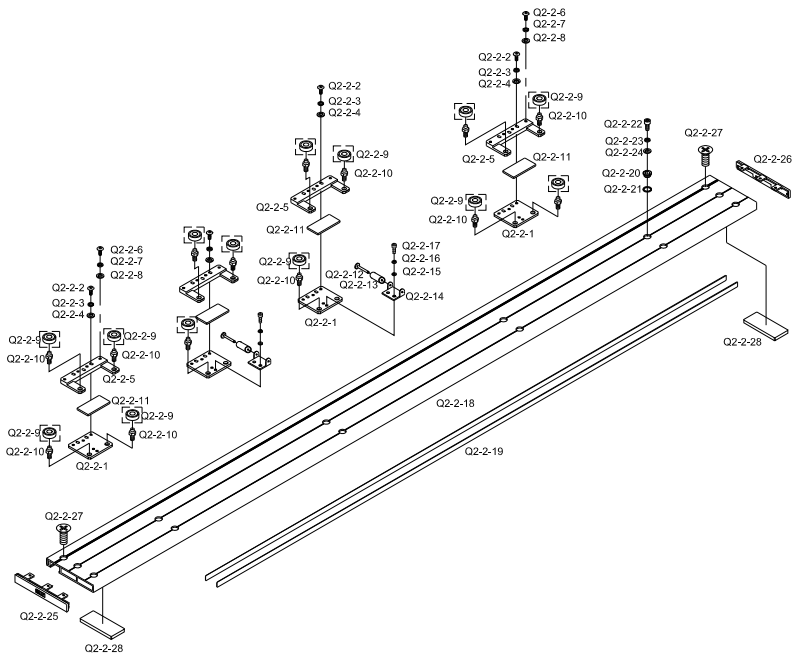

Note

Ref.No	Part No.	Part Name	Applied Period	Interchangeability	Hardware	Q'ty	Remark
Q2-2-26	AS-001419-02	FRAME E ENDCAP B SET	Feb,20,07 ~ May,23,07	△		1	
	AS-001419-03		May,23,07 ~	△			
Q2-2-27	10011SC-8119	PLUS SCREW (M3*L6)				6	
Q2-2-28	GP-006545-00	FELT V	Dec,21,04 ~	X		2	

Q2

R. Index

Part No.	Part Name	Page	Ref.No
04002200H000	Mes Shaft Bracket	33	D-3-8
01000300B004	TABLE SUPPORT ANGLE "K"	83	K1-1-19
01000700H004	Table Support(D)(L=349.5)	83	K1-1-5
01000700H004	Table Support(D)(L=349.5)	83	K1-1-15
01001100H00	Ball Bearing (6004Zz)	20	B-5-2
01001100H000	Ball Bearing (6005Zz)	36	E-1-24
01001500B000	Spool Stand (L=280)	11	A1-1-6
01-001S-NET1	Fixing Screw (M3xL6)	100	M-4-26
01-002B-AU12	FAN Cover	95	M-2-20
01-002B-OT10	Pressing Plate for LCD	99	M-4-10
01-002M-AU12	Fixing Screw for Fan	95	M-2-18
01-003B-SW63	DOOR LOCK	100	M-4-19
01-003S-BT01	Caution Sticker	94	M-1-20
01-004S-BT01	Fan Cleaning Sticker	95	M-2-15
01006SC-4113	Hex. Socket Bolt (M10*L50)	14	A2-1-2
01007SW-1111	Washer (@10)	14	A2-1-4
01008SW-9115	Spring Washer (@10)	11	A1-1-12
01008SW-9115	Spring Washer (@10)	14	A2-1-3
01008SW-9115	Spring Washer (@10)	14	A2-1-13
01-016A-DU33	Speaker	99	M-4-24
01029BR-A001	Ball Bearing(6004ZZ)	38	E-2-7
01100210B000	Hook Shaft	12	A1-2-7
01100400B000	I Bolt(Set)	11	A1-1-3
01100400H000	Bearing Cover	12	A1-2-17
01101300A000	Hook Shaft Collar	16	B-1-4
01101700U000	Low Shaft Gear	12	A1-2-13
01101800B000	Mes Adjusting Bushing	34	D-4-13
01101900U000	Hook Shaft Gear	12	A1-2-11
01102000B000	Bearing Bushing	12	A1-2-14
01-102B-OT10	Insulation Bush(B)	99	M-4-31
01111100B009	TABLE SUPPORT ANGLE "A-1"	14	A2-1-9
0120000B000	Mes Driving Crank Assy	34	D-4-22
01300100H000	Oil Pump Set	28	C-6-1
01300200H000	Oil Pump Adapter	28	C-6-5
01300300H000	Oil Pump Hose Insert	27	C-5-1
01300300H000	Oil Pump Hose Insert	27	C-5-9
01300300H000	Bed Oil Hose Insert	27	C-5-17
01300300H000	Oil Pump Hose Insert	28	C-6-6
01300300H000	Oil Pump Hose Insert	28	C-6-17
01300400H000	Oil Pump Compression Sleeve	27	C-5-2
01300400H000	Oil Pump Compression Sleeve	27	C-5-10
01300400H000	Bed Oil Compression Sleeve	27	C-5-18
01300400H000	Oil Pump Compression Sleeve	28	C-6-7
01300400H000	Oil Pump Compression Sleeve	28	C-6-18
01300500H000	Oil Pump Compression Bushing	27	C-5-3
01300500H000	Oil Pump Compression Bushing	27	C-5-11
01300500H000	Bed Oil Compression Bushing	27	C-5-19
01300500H000	Oil Pump Compression Bushing	28	C-6-8
01300500H000	Oil Pump Compression Bushing	28	C-6-19
01300600H000	Oil Pump Hose (@4)	28	C-6-9
01300900H000	Mos Metering Valve	27	C-5-16
01301000H000	Valve Junction Connect Hose	27	C-5-22
01301100H000	Bed Oil Supply Hose "A"	27	C-5-20

Part No.	Part Name	Page	Ref.No
01301200H000	Bed Oil Supply Hose "B"	27	C-5-21
01301500H000	Bed Oil Supply Hose Holder	27	C-5-24
01301600H000	Oil Supply Nipple	27	C-5-23
01302210H000	Stop Valve (1/8)	28	C-6-12
01302400H000	Stop Valve Adapter Hose (@4)	28	C-6-16
01302400H000	Stop Valve Adapter Hose (@4)	28	C-6-20
01302600H000	Stop Valve Adapter	28	C-6-15
01302700U000	Mos Metering Valve Junction	27	C-5-12
01303700H000	Tension Plate Pin	42	F-1-31
01303800H000	Oil Hose @4	27	C-5-8
01303900H000	Distribution Junction	27	C-5-4
02-0000-EMB1	Head On/Off S/W Board (9,15C)	49	G-2-14
02000100T000	MAGNETIC SWITCH SET	90	L-1-22
02000400B000	CABLE COVER HOLDER	92	L-2-6
02000910T000	MAGNETIC S/W FIXED BRACKET	90	L-1-20
02001300T000	BRACKET STOPPER (CE)	90	L-1-21
02-001A-UI12	Color Change Board (9C)	46	F-4-17
02-001B-SW67	Switch Cover	98	M-3-26
02001DC-A001	Brand Mark	109	P-1-8
02002PM-D092	Top Shaft Cover "B"	110	P-2-9
02002SC-7119	Pluss Screw (M4*L8)	60	H1-6-49
02002SC-7119	Pluss Screw (M4*L8)	71	H2-6-49
02002SC-7119	Pluss Screw (M4*L8)	109	P-1-9
02003MC-8118	UNDER THREAD PRESSER SCREW	34	D-4-8
02004BR-T121	Hook Shaft Space	12	A1-2-8
02-009A-8180	Ball Bearing (6004NR)	54	H1-2-16
02-009A-8180	Ball Bearing (6004NR)	54	H1-2-22
02-009A-8180	BALL BEARING 6004NR	61	H1-7-18
02-009A-8180	Ball Bearing 6004NR	61	H1-7-21
02-009A-8180	Ball Bearing (6004NR)	65	H2-2-16
02-009A-8180	Ball Bearing (6004NR)	65	H2-2-22
02-009A-8180	BALL BEARING 6004NR	72	H2-7-18
02-009A-8180	Ball Bearing 6004NR	72	H2-7-21
02009SC-A001	Side Cover Screw	19	B-4-5
02009SC-A001	Side Cover Screw	23	C-1-6
02009SC-A001	Bracket Screw	77	I-3-9
02010AF-3123	Hex.Socket Bolt(M4*L12)	112	Q1-1-23
02010AF-3123	Hex.Socket Bolt(M4*L12)	117	Q2-1-23
02010SC-3123	Truss Screw (M4*L8)	49	G-2-7
02010SC-3123	Truss Screw (M4*L8)	75	I-1-55
02010SC-3123	TRUSS SCREW (M4*L8)	80	J-1-3
02010SC-3123	Truss Screw (M4*L8)	103	N-2-22
02010SC-3123	Truss Screw (M4*L8)	104	N-3-22
02010SC-3123	Truss Screw (M4*L8)	109	P-1-18
02014SC-7113	Hex. Socket Bolt (M4*L5)	42	F-1-33
02014SC-7113	Hex. Socket Bolt (M4*L5)	78	I-4-20
02014SC-7113	Hex. Socket Bolt (M4*L5)	110	P-2-2
02015SC-7113	Hex.Socket Bolt(M4*L10)	16	B-1-11
02015SC-7113	Driving Lever Pin Screw	18	B-3-9

Part No.	Part Name	Page	Ref.No
02015SC-7113	Hex.Socket Bolt(M4*L10)	19	B-4-8
02015SC-7113	Hex. Socket Bolt (M4*L10)	32	D-2-2
02015SC-7113	Hex. Socket Bolt (M4*L10)	34	D-4-16
02015SC-7113	Hex. Socket Bolt (M4*L10)	34	D-4-20
02015SC-7113	Hex. Socket Bolt (M4*L10)	43	F-2-36
02015SC-7113	HEX.SOCKET BOLT(M4*L10)	46	F-4-11
02015SC-7113	Hes. Socket Bplt (M4*L10)	48	G-1-2
02015SC-7113	C.S Screw (M4*L10)	48	G-1-4
02015SC-7113	Hex. Socket Bolt (M4*L10)	59	H1-6-3
02015SC-7113	HEX.SOCKET BOLT(M4*L10)	70	H2-6-3
02015SC-7113	Hex.Socket Bolt(M4*L10)	75	I-1-39
02015SC-7113	Hex.Socket Bolt(M4*L10)	81	J-2-11
02015SC-7113	Hex. Socket Bolt (M4*L10)	110	P-2-3
02015SC-7113	Hex. Socket Bolt (M4*L10)	110	P-2-5
02017PM-A001	Cable Ring	92	L-2-10
02021PM-AC00	Top Shaft Cover "A"	110	P-2-8
02022PR-UK01	Upper Shaft Cover "B" Bracket	42	F-1-32
02023ET-A001	Top Shaft Cover Magnet	110	P-2-10
02023SC-7113	Hex. Socket Bolt (M4*L8)	19	B-4-19
02023SC-7113	Hex.Socket Bolt(M4 x L8)	20	B-5-8
02023SC-7113	Hex. Socket Bolt (M4*L8)	26	C-4-3
02023SC-7113	Hex. Socket Bolt (M4*L8)	28	C-6-11
02023SC-7113	Hex. Socket Bolt (M4*L8)	33	D-3-10
02023SC-7113	Hex.Socket Bolt (M4*L8)	36	E-1-19
02023SC-7113	Hex.Socket Screw (M4xL8)	38	E-2-17
02023SC-7113	Hex. Socket Bolt (M4*L8)	43	F-2-30
02023SC-7113	HEX.SOCKET BOLT (M4*L8)	46	F-4-9
02023SC-7113	Hex.Socket Bolt (M4*L8)	49	G-2-10
02023SC-7113	Hex. Socket Bolt (M4*L8)	50	G-3-2
02023SC-7113	Position Adjusting Screw	52	H1-1-29
02023SC-7113	Hex.Socket Bolt(M4*L12)	55	H1-3-5
02023SC-7113	Plus Screw (M3*L8)	56	H1-4-29
02023SC-7113	Hex. Socket Bolt (M4*L8)	59	H1-6-25
02023SC-7113	Hex. Socket Bolt (M4*L8)	60	H1-6-53
02023SC-7113	Position Adjusting Screw	63	H2-1-29
02023SC-7113	Hex.Socket Bolt(M4*L12)	66	H2-3-5
02023SC-7113	Plus Screw (M3*L8)	67	H2-4-30
02023SC-7113	Hex. Socket Bolt (M4*L8)	70	H2-6-25
02023SC-7113	Hex. Socket Bolt (M4*L8)	71	H2-6-53
02023SC-7113	Hex.Socket Bolt (M4*L8)	75	I-1-51
02023SC-7113	Hex.Socket Bolt (M4*L8)	76	I-2-2
02023SC-7113	Hex. Socket Bolt (M4*L8)	78	I-4-11
02023SC-7113	Hex. Socket Bolt (M4*L8)	78	I-4-18
02023SC-7113	Truss Screw (M4*L8)	90	L-1-18
02023SC-7113	Hex.Socket Bolt(M4*L8)	114	Q1-2-2
02023SC-7113	HEX.SOCKET BOLT (M4*L8)	114	Q1-2-17
02023SC-7113	Hex.Socket Bolt(M4*L8)	119	Q2-2-2
02023SC-7113	HEX.SOCKET BOLT (M4*L8)	119	Q2-2-17
02025PR-A001	Bobbin Stand Bracket	109	P-1-10

R. Index

Part No.	Part Name	Page	Ref.No
02026EL-UK01	START S/W	87	K2-2-30
02026SC-A001	Stand	106	O-1-17
02026SC-A001	Bobbin Stand	109	P-1-11
02027EL-UK01	STOP S/W	87	K2-2-31
02028SW-9115	Spring Washer(@4)	20	B-5-15
02028SW-9115	Spring Washer (@4)	59	H1-6-26
02028SW-9115	Spring Washer (@4)	60	H1-6-54
02028SW-9115	Spring Washer (@4)	70	H2-6-26
02028SW-9115	Spring Washer (@4)	71	H2-6-54
02028SW-9115	Spring Washer (@4)	80	J-1-4
02028SW-9115	Spring Washer (@4)	81	J-2-7
02028SW-9115	Spring Washer(@4)	81	J-2-12
02028SW-9115	Spring Washer (@4)	109	P-1-15
02029SN-9311	Hex. Nut (M4-No2)	103	N-2-10
02029SN-9311	Hex. Nut (M4-No2)	104	N-3-10
02029SN-9311	Hex. Nut (M4)	109	P-1-14
02030SW-B001	Bearing Case Washer	20	B-5-4
02031SC-7113	Hex. Socket Screw(M5*L10)	20	B-5-3
02031SC-7113	Hex.Socket Screw(M5*L10)	43	F-2-35
02031SC-7113	Hex. Socket Screw(M5*L10)	84	K1-2-15
02031SC-7113	Hex. Socket Screw(M5*L10)	87	K2-2-17
02031SC-7113	Hex. Socket Screw(M5*L10)	102	N-1-5
02031SC-7113	Hex. Socket Screw(M5*L10)	102	N-1-16
02031SC-7113	Hex. Socket Bolt (M5*L10)	109	P-1-12
02038SC-9131	Plus Screw (M5*L10)	90	L-1-3
02044SC-3123	Truss Screw (M5*L8)	25	C-3-12
02044SC-3123	Truss Screw(M5 x L8)	38	E-2-19
02044SC-3123	Truss Screw (M5*L8)	90	L-1-5
02044SC-3123	Truss Screw(M5*L10)	90	L-1-25
02044SC-3123	Truss Screw (M5*L8)	109	P-1-2
02044SC-3123	Truss Screw (M5*L8)	109	P-1-4
02044SC-3123	Truss Screw (M5*L8)	109	P-1-7
02054PR-A001	Main Motor Pulley Cover	38	E-2-18
02058AD-AB00	Cable Cover (A)	102	N-1-1
02059AD-AH21	Cable Cover (C)	102	N-1-3
02060AD-AH21	Cable Cover (B)	102	N-1-2
02065SC-3328	Tapping Screw (M3*L10)	102	N-1-8
02086PR-UI12	Top Shaft Cover(L)	110	P-2-1
02087SC-4329	Tapping Screw (@5*L25)	11	A1-1-13
02087SC-4329	Tapping Screw (@5*L25)	14	A2-1-14
02097ET-B001	Model Name Plate	109	P-1-17
02321SN-A001	HEX. NUT (M16)	87	K2-2-25
02325SC-A021	HEX. BOLT (M16*L150)	87	K2-2-26
02331CW-A001	TABLE SUPPORT BASE SET	87	K2-2-27
02332RB-A001	TABLE SUPPORT RUBBER(B)	87	K2-2-28
03-0000-EMB1	Head On/Off S/W Board (6,12C)	49	G-2-14
03000100I000	Oil Supply Sensor Stopper Collar	38	E-2-3
03000110H000	Upper Shaft Bearing Collar	20	B-5-5
03000200I000	Oil Supply Sensor Plate	38	E-2-1
03000210BDK0	Low Shaft "B" [2053mm]	38	E-2-15
03000400I000	Low Shaft "A"[225mm]	38	E-2-12
03000500U000	Oil Tube Pin	26	C-4-5

Part No.	Part Name	Page	Ref.No
03002700H000	Return Spring	74	I-1-36
03002700T000	Bearing Collar	68	H2-4-43
03002800H000	Return Spring Stopper Washer	75	I-1-37
03002900H000	Return Spring Fix Pin Washer	75	I-1-40
03003000H000	Return Spring Fix Pin	75	I-1-38
03003100H000	Upper Thread Hook Motor Unit	74	I-1-1
03003300H000	Cam Shaft Fixing Block	74	I-1-6
03003500H000	Motor Driving Cam Shaft	74	I-1-10
03003910H000	Upper Thread Driving Plate	74	I-1-17
03003SC-4113	Pulley Box Screw [M8×L35]	36	E-1-2
03003SC-4113	Hex. Socket Bolt "B"(M8*L35)	44	F-3-2
03004400H000	Motor Driving Connect Bearing	74	I-1-26
03004500H000	Connecting Plate Pin Washer	74	I-1-28
03004800H000	Connecting Plate Knuckle	74	I-1-31
03005210H000	Collar "A"	36	E-1-25
03005210H000	COLLAR "A"	54	H1-2-17
03005210H000	Collar "A"	61	H1-7-22
03005210H000	COLLAR "A"	65	H2-2-17
03005210H000	Collar "A"	72	H2-7-22
03005600H000	ANGLE DISK	36	E-1-15
03005710H000	Angle Plate Base @20	36	E-1-16
03005800H000	Indicator	36	E-1-18
03005MC-3123	TRUSS SCREW (M3*L5)	76	I-2-7
03006400IDK0	Top Shaft "B" [1493.5mm]	37	E-1-40
03006520HDK0	Top Shaft "C" [855mm]	37	E-1-40
03006610HDK0	Top Shaft "D"[970mm]	37	E-1-40
03006910HDK0	Low Shaft "D" [2308mm]	38	E-2-15
03006MC-3123	Truss Screw (M3*L6)	18	B-3-31
03006MC-9123	TRUSS SCREW(M3*L6) SUS	46	F-4-16
03007000HEK0	UPPER THREAD DRIVING SHAFT A	75	I-1-41
03007100HHI0	UPPER THREAD DRIVING SHAFT B	75	I-1-42
03007200HEK0	UPPER THREAD DRIVING SHAFT C	75	I-1-43
03007200HHI0	UPPER THREAD DRIVING SHAFT C	75	I-1-44
03007300H000	Upper Thread Shaft Coupling	75	I-1-45
03007410HDK0	Top Shaft "E" [1400mm]	37	E-1-40
03007500H000	Low Coupling	38	E-2-13
03007SC-A001	Cam Base Screw	17	B-2-7
03008000H000	Ball Bearing 689 (Ntn)	18	B-3-15
03008100K000	Needle Bar Drive Bearing Bush	18	B-3-16
03008300H000	Connecting Plate Pin	74	I-1-27
03008600H000	Motor Cover Fixing Bracket	75	I-1-50
03013EL-T121	Encoder Set	25	C-3-1

Part No.	Part Name	Page	Ref.No
03016SC-4113	Hex.Socket Screw(M5*L15)	36	E-1-33
03016SC-4113	Hex. Socket Bolt (M5*L15)	39	E-3-18
03016SC-4113	Screw	54	H1-2-21
03016SC-4113	Hex. Socket Bolt (M5*L15)	58	H1-5-11
03016SC-4113	Screw	65	H2-2-21
03016SC-4113	Hex. Socket Bolt (M5*L15)	68	H2-4-44
03016SC-4113	Hex. Socket Bolt (M5*L15)	69	H2-5-11
03016SC-4113	Hex. Socket Bolt (M5*L15)	74	I-1-22
03016SC-4113	Hex. Socket Bolt (M5*L15)	81	J-2-5
03016SC-4113	Hex. Socket Bolt (M5*L15)	102	N-1-15
03020SC-A001	Drive Pin Screw 11/64,N40,L8	16	B-1-3
03020SC-A001	Drive Pin Screw 11/64,N40,L8	18	B-3-18
03020SC-A001	Drive Pin Screw (11/64,N40,L8)	44	F-3-13
03020SC-A001	Drive Pin Screw (11/64,N40,L8)	45	F-3-36
03022SC-4517	Hex. Socket Set Screw(M4*L5)	16	B-1-13
03022SC-4517	Hex. Socket Set Screw(M4*L5)	41	F-1-29
03022SC-4517	Hex.Socket Screw (M4*L5)	52	H1-1-16
03022SC-4517	Hex.Socket Screw (M4*L5)	56	H1-4-18
03022SC-4517	Hex.Socket Screw (M4*L5)	63	H2-1-16
03022SC-4517	Hex.Socket Screw (M4*L5)	67	H2-4-18
03023SC-A001	Connecting Rod Stud	18	B-3-2
03025SW-1211	Washer (@6)	18	B-3-4
03025SW-1211	Washer (@6)	28	C-6-4
03025SW-1211	Washer (@6)	30	D-1-9
03025SW-1211	Washer (∅8)	37	E-1-39
03025SW-1211	Washer (@6)	44	F-3-27
03026SW-9115	Spring Washer (@6)	18	B-3-5
03026SW-9115	Spring Washer (@6)	28	C-6-3
03026SW-9115	Spring Washer (@6)	30	D-1-8
03026SW-9115	Spring Washer (@6)	44	F-3-26
03026SW-9115	Spring Washer (@6)	52	H1-1-10
03026SW-9115	Spring Washer (@6)	56	H1-4-12
03026SW-9115	Spring Washer (@6)	63	H2-1-10
03026SW-9115	Spring Washer (@6)	67	H2-4-12
03026SW-9115	Spring Washer (@6)	68	H2-4-46
03026SW-9115	Spring Washer	74	I-1-33
03026SW-9115	Spring Washer (@6)	90	L-1-13
03027SN-A001	Stud Nut	18	B-3-6
03031SN-A001	Pin. Nut (11/64,N=40)	48	G-1-6
03031SN-A001	Pin. Nut (11/64,N=40)	48	G-1-10
03031SN-A001	Pin. Nut (11/64,N=40)	81	J-2-16
03033CW-A001	Driver Pin	18	B-3-23
03034SW-A001	Reciprocator Washer	18	B-3-10
03039PR-B001	Stopper Bracket	18	B-3-27
03040SC-A001	Stopper Bracket Screw	18	B-3-22
03041PR-B001	Reciprocator Stopper	18	B-3-26
03045SP-B001	Jump Spring	18	B-3-28
03046CW-B001	Jump Spring Guide	18	B-3-29
03048SW-A001	Reciprocator Washer	18	B-3-21
03050SC-4517	Hex. Socket Set Screw (M3*L3)	19	B-4-13
03050SC-4517	Hex. Socket Set Screw (M3*L3)	34	D-4-6
03053SF-A001	Felt "B"	18	B-3-17
03056CL-B001	Head Rail Holder	21	B-6-5

R. Index

Part No.	Part Name	Page	Ref.No
03057SC-A001	Head Rail Holder Screw	19	B-4-17
03057SC-A001	Head Rail Holder Screw	21	B-6-6
03057SC-A001	Head Rail Holder Screw (11/64,L10)	34	D-4-2
03062ET-A001	Code Clip	45	F-3-38
03062PR-UK01	Side Cover "B3"	19	B-4-1
03065SC-A001	Guard Plate Screw	24	C-2-3
03065SC-A001	Guard Plate Screw	24	C-2-6
03065SC-A001	GUARD PLATE SCREW	55	H1-3-18
03065SC-A001	GUARD PLATE SCREW	58	H1-5-28
03065SC-A001	GUARD PLATE SCREW	66	H2-3-18
03065SC-A001	Guard Plate Screw	69	H2-5-28
03068LM-BB00	Lm Guide Block Set 12C	23	C-1-1
03069LM-B002	Lm Guide Block Set 9C	23	C-1-1
03071SC-7113	Hex. Socket Bolt (M3*L10)	33	D-3-6
03071SC-A001	Hex.Scoket Bolt (M3*L15)	23	C-1-2
03072MC-4113	Hex. Socket Bolt (M8*L28)	21	B-6-2
03100410H000	Top Shaft Drive Pulley	36	E-1-32
03100410H000	Main Motor Pulley	39	E-3-17
03100600H000	Main Motor Guide	39	E-3-12
03200200I000	Pulley For Low Shaft	38	E-2-8
03200300I000	Tension Adjusting Roller	36	E-1-6
03200400I000	ROLLER BEARING	36	E-1-7
03200500I000	Idler Shaft	36	E-1-11
03200600I000	Idler Bush	36	E-1-9
03200700I000	C-Ring (#20)	36	E-1-8
03200800I000	Timing Belt (B300 S5M 625)	36	E-1-34
03201100I000	Collar "B" @20	36	E-1-20
03300604U000	Take-Up Guide Rail 12C L=339	23	C-1-3
03301200A000	Bushing	16	B-1-17
03301800U000	Needle Bar Drive Pin	16	B-1-1
03302100A000	Pin Collar	16	B-1-12
03302600I000	Arm Guide Plate	21	B-6-7
03302900H000	Needle Case (38419)	17	B-2-4
03303300H000	Lever Pin	18	B-3-7
03303800I000	Arm Guard Plate(R)	24	C-2-5
03304100I000	Thread Holding Lever Ass'y	24	C-2-7
03304200I000	Lever Spring	24	C-2-8
03304300I000	Lever Spring Bush.	24	C-2-9
03304400I000	Thread Holding Push Plate	24	C-2-10
03500100I000	Upper Thread Catcher Base	76	I-2-1
03500210H000	Base Cover	76	I-2-6
03500300I000	UPPER THREAD CATCHER	76	I-2-8
03500400H000	Upper Catcher Connect Pin	76	I-2-9
03500500H000	Upper Catcher Driving Lever	76	I-2-12
03500600H000	Driving Lever Pin	76	I-2-13
03500700H000	Driving Lever Pin Collar	76	I-2-14
03500800H000	Driving Lever Pin Washer	76	I-2-16
03500900H000	Clutch Block	76	I-2-17
03501000H000	Clutch Stud Screw	76	I-2-18
03501100H000	Clutch Spring	76	I-2-19
03501200H000	Clutch Dial	76	I-2-20

Part No.	Part Name	Page	Ref.No
03700400H000	Mes Driving Link	30	D-1-11
03700500H000	Mes Driving Link Screw	30	D-1-12
03700600H000	Mes Shaft Driving Clamp	30	D-1-13
03700700H000	Mes Driving Shaft (@10*L121)	30	D-1-15
03700800H000	Mes Driving Shaft Guide	30	D-1-16
03701000H000	Ball Bearing (6001Z)	30	D-1-28
03701100H000	Mes Driving Shaft Bush	30	D-1-18
03701200BT00	MOTOR DRIVING NOB	30	D-1-29
038A0000I000	Drive Lever "A,B" Set	16	B-1-18
04000100B000	Cam Roller End Seal "A"	58	H1-5-27
04000100B000	Cam Roller End Seal "A"	69	H2-5-27
04000100H000	X-Lm Guide Support Plate (A)	52	H1-1-22
04000100H000	X-Lm Guide Support Plate (A)	63	H2-1-22
04000200B000	CAM ROLLER END SEAL B	55	H1-3-17
04000200B000	Cam Roller End Seal "B"	58	H1-5-27
04000200B000	CAM ROLLER END SEAL B	66	H2-3-17
04000200B000	Cam Roller End Seal "B"	69	H2-5-27
04000200H000	X-Lm Guide Support Plate (B)	52	H1-1-23
04000200H000	X-Lm Guide Support Plate (B)	63	H2-1-23
04000200HHI0	Mes Driving Shaft "D"	31	D-1-40
04000400B000	X-TIMING PULLEY (S5M)	53	H1-1-37
04000400B000	X-TIMING PULLEY (S5M)	57	H1-4-39
04000400B000	X-TIMING PULLEY (S5M)	64	H2-1-37
04000400B000	X-TIMING PULLEY (S5M)	68	H2-4-38
04000500I000	X Moving Plate	55	H1-3-4
04000500I000	X Moving Plate	66	H2-3-4
04000630I000	BEARING (6905ZZ)	52	H1-1-33
04000630I000	Needle Bearing (Nk18/16A)	57	H1-4-35
04000630I000	BEARING (6905ZZ)	63	H2-1-33
04000630I000	Needle Bearing (Nk18/16A)	68	H2-4-34
04000650I000	TIMING PULLEY BRACKET (L)	52	H1-1-31
04000650I000	TIMING PULLEY BRACKET (L)	57	H1-4-33
04000650I000	TIMING PULLEY BRACKET (L)	63	H2-1-31
04000650I000	TIMING PULLEY BRACKET (L)	67	H2-4-32
04000660I000	TIMING PULLEY BRACKET (R)	52	H1-1-32
04000660I000	TIMING PULLEY BRACKET (R)	57	H1-4-34
04000660I000	TIMING PULLEY BRACKET (R)	63	H2-1-32
04000660I000	TIMING PULLEY BRACKET (R)	68	H2-4-33
04000700B009	Y-Drive Timing Belt "A"	69	H2-5-2
04000700F000	Sensor Perception Plate X,Y	55	H1-3-6
04000700F000	Sensor Perception Plate X,Y	66	H2-3-6
04000800B009	Y-Drive Timing Belt "B	69	H2-5-2
04000800H000	Sensor Plate "Y"	58	H1-5-5
04000800H000	Sensor Plate"C"	69	H2-5-5
04000900B009	Y-Adjusting Shaft	67	H2-4-22
04000900I000	Y-Axis Bearing Block (Rear)	58	H1-5-3
04000900I000	Y-Axis Bearing Block (Rear)	69	H2-5-3
04001000H000	Mes Driving Box Cover	32	D-2-8
04001000I004	X Driving Pulley Shaft	54	H1-2-19
04001000I004	X Driving Pulley Shaft	65	H2-2-19
04001100BT00	MES DRIVING CRANK	30	D-1-1
04001700B009	Idler (A)	68	H2-4-40

Part No.	Part Name	Page	Ref.No
04001700H000	Driving Shaft Coupling	65	H2-2-26
04001800B009	Idler Shaft (A)	68	H2-4-42
04001800I000	X Motor Base	54	H1-2-9
04001800I000	X Motor Base	65	H2-2-9
04001900B009	Idler Base (A)	68	H2-4-41
04-001A-SW60	Color Change Board 12C	46	F-4-17
04002000B009	Idler Base (B)	68	H2-4-41
04002000B009	Idler Shaft (B)	68	H2-4-42
04002100B009	Idler (B)	68	H2-4-40
04002200I000	Y-MOTER BASE	61	H1-7-7
04002200I000	Y-MOTER BASE	72	H2-7-7
04003500B000	Bearing Stopper Collar "A"	54	H1-2-23
04003500B000	Needle Bearing Collar	61	H1-7-19
04003500B000	Bearing Stopper Collar "A"	65	H2-2-23
04003500B000	Needle Bearing Collar	72	H2-7-19
04003500I000	NEEDLE BEARING COLLAR	52	H1-1-34
04003500I000	NEEDLE BEARING COLLAR	57	H1-4-36
04003500I000	NEEDLE BEARING COLLAR	63	H2-1-34
04003500I000	NEEDLE BEARING COLLAR	68	H2-4-35
04-003S-AU10	Warning Sticker	94	M-1-21
04004AF-A001	Needle Plate Screw	78	I-4-26
04004MC-4517	Hex,Socket Bolt (M4×L4)	36	E-1-10
04007SC-A001	Cushion Cover Screw	78	I-4-25
04008PR-A001	Hook Base Cover	78	I-4-27
04010MC-7113	Hex.Socket Bolt (M4*L10)	48	G-1-3
04012AF-A001	Hook Shaft Bush Screw (15/64-28)	12	A1-2-10
04012AF-A001	Hook Shaft Bush Screw	16	B-1-5
04014SC-4517	Hex.Socket Set Screw(M5*L5)	11	A1-1-5
04014SC-4517	Hex.Socket Set Screw(M5*L5)	74	I-1-9
04014SC-4517	Hex.Socket Set Screw(M5*L5)	74	I-1-11
04014SC-4517	Hex.Socket Set Screw(M5*L5)	76	I-2-15
04014SC-4517	Hex. Socket Set Screw (M5*L6)	90	L-1-11
04016AF-A001	Cam Collar Screw	12	A1-2-15
04016AF-A001	Cam Collar Screw	44	F-3-9
04016MC-4113	CAM ROLLER GUIDE FIXED SCREW	55	H1-3-2
04016MC-4113	Cam Roller Guide Fixed Screw	56	H1-4-4
04016MC-4113	CAM ROLLER GUIDE FIXED SCREW	66	H2-3-2
04016MC-4113	Cam Roller Guide Fixed Screw	67	H2-4-4
04019CW-T121	Pin Stud Screw	16	B-1-10
04020AF-T121	Roller For Take-Up Gear-B	16	B-1-9
04021BR-T121	Needle Bearing Kt367N (Iko)	16	B-1-8
04026BR-A001	Ball Bearing 6003zz	12	A1-2-16
04028SC-A001	Stud Bolt(M10*L69)	12	A1-2-2
04029SW-A001	Stud Bolt Washer (@8)	12	A1-2-3
04029SW-A001	Stud Bolt Washer(S) (@8)	21	B-6-4
04029SW-A001	Stud Bolt Washer (@8)	30	D-1-6
04029SW-A001	Pulley Box Washer [Ø8]	36	E-1-4
04029SW-A001	Washer (Ø8)	36	E-1-13
04029SW-A001	Stud Bolt Washer(S) (@8)	39	E-3-4
04029SW-A001	Stud Bolt Washer(S) (@8)	39	E-3-9
04029SW-A001	Stud Bolt Washer(S) (@8)	39	E-3-11
04029SW-A001	Stud Bolt Washer (@8)	44	F-3-4

R. Index

Part No.	Part Name	Page	Ref.No
04029SW-A001	Stud Bolt Washer (@8)	52	H1-1-5
04029SW-A001	Stud Bolt Washer(S) (@8)	52	H1-1-26
04029SW-A001	Stud Bolt Washer(S) (@8)	54	H1-2-8
04029SW-A001	Stud Bolt Washer(S) (@8)	54	H1-2-12
04029SW-A001	Stud Bolt Washer(S) (@8)	54	H1-2-15
04029SW-A001	Stud Bolt Washer (@8)	56	H1-4-7
04029SW-A001	Stud Bolt Washer (@8)	59	H1-6-13
04029SW-A001	Stud Bolt Washer(S) (@8)	61	H1-7-10
04029SW-A001	Stud Bolt Washer(S) (@8)	61	H1-7-13
04029SW-A001	Stud Bolt Washer(S) (@8)	61	H1-7-17
04029SW-A001	Stud Bolt Washer (@8)	63	H2-1-5
04029SW-A001	Stud Bolt Washer(S) (@8)	63	H2-1-26
04029SW-A001	Stud Bolt Washer(S) (@8)	65	H2-2-8
04029SW-A001	Stud Bolt Washer(S) (@8)	65	H2-2-12
04029SW-A001	Stud Bolt Washer(S) (@8)	65	H2-2-15
04029SW-A001	Stud Bolt Washer (@8)	67	H2-4-7
04029SW-A001	Stud Bolt Washer (@8)	70	H2-6-13
04029SW-A001	Stud Bolt Washer(S) (@8)	72	H2-7-10
04029SW-A001	Stud Bolt Washer(S) (@8)	72	H2-7-13
04029SW-A001	Stud Bolt Washer(S) (@8)	72	H2-7-17
04029SW-A001	Stud Bolt Washer (@8)	84	K1-2-7
04029SW-A001	Stud Bolt Washer (@8)	87	K2-2-7
04030SW-A001	Stud Bolt Washer (L) (@8)	12	A1-2-4
04032SN-A001	Hex. Nut (M8)	12	A1-2-6
04032SN-A001	Hex. Nut (M8-NO2)	39	E-3-6
04032SN-A001	Hex. Nut (M8)	59	H1-6-10
04032SN-A001	Hex. Nut (M8)	70	H2-6-10
04032SN-A001	Hex. Nut (M8)	74	I-1-32
04032SN-A001	Hex. Nut (M8)	84	K1-2-5
04032SN-A001	Hex. Nut (M8)	87	K2-2-5
04033AF-D002	Rotary Hook Set	78	I-4-1
04034AF-A001	Bobbin Case Set	78	I-4-2
04035AF-A001	Bobbin	78	I-4-3
04037SC-A001	Picker Bracket Screw (11/64-40)	33	D-3-2
04100000ID0D	X-Roller Plate Assy	53	H1-1-39
04100100BH01	Guard Plate For Timing Belt (L=564)	52	H1-1-2
04100100BH0A	Guard Plate For Timing Belt (L=964)	52	H1-1-2
04100100ID00	X Axis Frame	52	H1-1-1
04100100ID00	X Axis Frame	63	H2-1-1
04100200H000	X-Driving Pulley Shaft	64	H2-1-39
04100330I000	Timing PULLEY(72-S5M-050)	54	H1-2-28
04100330I000	Timing PULLEY(72-S5M-050)	61	H1-7-27
04100330I000	Timing PULLEY(72-S5M-050)	65	H2-2-28
04100330I000	Timing PULLEY(72-S5M-050)	72	H2-7-27
04100410I000	Timing BELT (50-S5M-475)	54	H1-2-30
04100410I000	Timing BELT (50-S5M-475)	61	H1-7-29
04100410I000	Timing BELT (50-S5M-475)	65	H2-2-30
04100410I000	Timing BELT (50-S5M-475)	72	H2-7-29
04104300B000	Timing Pulley Driving Pin "A" (Belt:35)	56	H1-4-17
04104300B000	Timing Pulley Driving Pin "A" (Belt:35)	67	H2-4-17
04104400B000	Timing Pulley Driving Pin "B"	52	H1-1-15
04104400B000	Timing Pulley Driving Pin "B" (Belt:48)	56	H1-4-17
04104400B000	Timing Pulley Driving Pin "B"	63	H2-1-15

Part No.	Part Name	Page	Ref.No
04104400B000	Timing Pulley Driving Pin "B" (Belt:48)	67	H2-4-17
04105100B000	X BELT CATCHER PLATE (B)	55	H1-3-10
04105100B000	X BELT CATCHER PLATE (B)	63	H2-1-2
04105100B000	X BELT CATCHER PLATE (B)	66	H2-3-10
04200000I00I	Y-Cam Roller Plate Assy	64	H2-1-40
04200100B004	Guard Plate For Timing Belt B	56	H1-4-2
04200100I004	Y-Axis Frame L=638	56	H1-4-1
04200100I004	Y-Axis Frame L=638	67	H2-4-1
04200200I000	Y-Driving Pulley Shaft	61	H1-7-25
04200200I000	Y-Driving Pulley Shaft	72	H2-7-25
04200400B000	Y Adjusting Shaft Guide (A)	56	H1-4-23
04200400B000	Y Adjusting Shaft Guide (A)	67	H2-4-23
04200500B000	Y Adjusting Shaft Guide (B)	56	H1-4-20
04200500B000	Y Adjusting Shaft Guide (B)	67	H2-4-20
04200600B000	Adjusting Shaft Stopper	56	H1-4-26
04200600B000	Adjusting Shaft Stopper	67	H2-4-26
04202400B000	Timing Pulley Tension Base	52	H1-1-6
04202400B000	Timing Pulley Tension Base	56	H1-4-8
04202400B000	Timing Pulley Tension Base	63	H2-1-6
04202400B000	Timing Pulley Tension Base	67	H2-4-8
04202400B000	Y-Axis Feed Plate	69	H2-5-29
04205000B000	BELT CATCHER PLATE (B)	69	H2-5-18
04300100B004	Guard Plate For Timing Belt A	56	H1-4-2
04302300B000	Timing Pulley Tension Base(N) (Belt:35)	56	H1-4-8
04302300B000	Timing Pulley Tension Base(N) (Belt:35)	67	H2-4-8
04304900B000	BELT CATCHER PLATE (A)	69	H2-5-18
04400200B000	FIXED MES	34	D-4-4
04400310B000	UNDER THREAD PRESSER	34	D-4-7
04500200B000	TIMING ULLEY B(18-S5M-32F)	67	H2-4-14
04600100B000	TIMING PULLEY D(18-S5M-32F)	52	H1-1-12
04600100B000	TIMING PULLEY D(18-S5M-32F)	63	H2-1-12
04600100B000	TIMING PULLEY D(18-S5M-32F)	67	H2-4-14
05000200U000	Take-Up Lever Drive Pin	16	B-1-15
05000210T000	TRANSFORMER (EMT25V) 1A/25.5V	90	L-1-19
05007SC-7113	Hex.Scoket Bolt (M3*L5)	24	C-2-13
05008MC-4517	Hex. Socket Bolt (M5*L8)	74	I-1-7
05008SC-4113	Hex.Socket Bolt (M4*L16)	39	E-3-13
05008SC-4113	Hex.Socket Bolt (M4*L16)	41	F-1-27
05008SC-4113	Hex. Socket Bolt (M4*L16)	74	I-1-35
05009SW-1111	Washer(@4)	48	G-1-17
05009SW-1111	Washer(@4)	59	H1-6-27
05009SW-1111	Washer(@4)	60	H1-6-55
05009SW-1111	Washer(@4)	70	H2-6-27
05009SW-1111	Washer(@4)	71	H2-6-55
05014SC-7113	Hex. Socket Bolt (M4*L25)	28	C-6-13
05014SC-7113	Hex. Socket Bolt (M4*L25)	41	F-1-3
05015CW-A001	Head Base Pin(@5*L15)	41	F-1-4
05015MC-4113	Hex. Socket Bolt (M5*L15)	20	B-5-6
05016SN-1211	Nut (@4)	49	G-2-8
05019SC-A001	Needle Bar Cover Screw (M5*L6)	41	F-1-5
05021SF-A001	Felt	41	F-1-9
05022SW-A001	Spring Shoe Washer	41	F-1-8
05023RB-A001	Needle Bar Cushion Rubber "A"	41	F-1-10

Part No.	Part Name	Page	Ref.No
05024RB-A001	Needle Bar Cushion Rubber "B"	41	F-1-11
05026SC-4113	Stopper Screw (9/64-11.5)	41	F-1-15
05028SC-4113	Holder Screw (9/64-L8)	41	F-1-13
05028SC-A001	Holder Screw	60	H1-6-43
05028SC-A001	Holder Screw	71	H2-6-43
05029BM-A001	Presser Foot Set	41	F-1-17
05031AF-A001	Mes Shaft Bracket Bush	33	D-3-7
05031AF-A001	Presser Foot Guide Bush	41	F-1-19
05032RB-A001	Presser Foot Cushion Rubber"B	41	F-1-24
05033PR-T121	Take-Up Lever	43	F-2-21
05033RB-A001	Presser Foot Adjusting Rubber	41	F-1-25
05034RB-A001	Presser Foot Adjusting Rubber	41	F-1-26
05035PM-T121	Take-Up Lever Boss (9C)	43	F-2-23
05035RB-A001	Presser Foot Cushion Rubber"A	41	F-1-20
05036AF-A001	Needle Fixed Holder	41	F-1-21
05037DB-A001	Needle (Db-K5, #11)	41	F-1-22
05041SC-A001	Guide Rail Screw	23	C-1-4
05041SC-A001	Guide Rail Serew	43	F-2-32
05057SN-3211	Hex. Nut (M3)	46	F-4-21
05060SC-8118	Screw (M3*L3)	43	F-2-16
05062SC-A001	Thread Guide (L) Screw	21	B-6-8
05062SC-A001	Thread Guide (L) Screw	43	F-2-5
05063RB-A001	Magnetic Rubber "A"	41	F-1-30
05070SC-3123	Head Face Plate (U) Screw	43	F-2-3
05070SC-3123	Thread Guide (L) Screw	43	F-2-8
05070SC-3123	Thread Guide (L) Screw	43	F-2-19
05100100B000	Switch Bar @19*@22 L6300	103	N-2-12
05100100B000	Switch Bar @19*@22 L6300	104	N-3-12
05100300B000	Switch Bar Cap	103	N-2-13
05100300B000	Switch Bar Cap	104	N-3-13
05100800B000	S/W Bar Return Spring Guide	103	N-2-5
05100800B000	S/W Bar Return Spring Guide	104	N-3-5
05363SC-A001	Needle Fixed Screw (A/S)	41	F-1-23
05452CM-A001	Eyelet "A"	43	F-2-2
05452CM-A001	Eyelet "A"	43	F-2-18
05452CM-A001	EYELET "A"	48	G-1-7
05452CM-A001	Thread Guide Bushing	106	O-1-12
05642RB-A001	Magnetic Rubber "B"	43	F-2-7
05651PR-A002	Head Face Plate (L) Set 9C	43	F-2-6
06000010B000	Table Connecting Plate (Set)	84	K1-2-12
06000010B000	Table Connecting Cover(D)	86	K2-1-12
06000100B009	Table Support(A)(L=1754)	14	A2-1-6
06000200B009	Table Support(B)(L=1051)	86	K2-1-11
06000200BTZI	TABLE SUPPORT ANGLE "C-1"	86	K2-1-16
06000300B009	Table Support(C)(L=371.5)	14	A2-1-7
06000400B009	Table Support(D)(L=730)	86	K2-1-10
06000500B009	Table Support(E)(L=360)	86	K2-1-13
06000600B009	Table Support(F)(L=664)	14	A2-1-8
06000700B009	Table Support(G)(L=325)	86	K2-1-14
06000800B009	Table Support(H)(L=376)	86	K2-1-15
06000900B009	Table Support(I)(L=293)	14	A2-1-10
06000900B009	Table Support(I)(L=293)	86	K2-1-17

R. Index

Part No.	Part Name	Page	Ref.No
06000900BUYK	TABLE SUPPORT ANGLE "K"	86	K2-1-18
06001100B000	TABLE CONNECTING PLATE "C"	84	K1-2-17
06001100B000	TABLE CONNECTING PLATE "C"	87	K2-2-13
06001200B000	TABLE SPACE PLATE "C"	84	K1-2-18
06001200B000	TABLE SPACE PLATE "C"	87	K2-2-14
06-001C-SE50	Fixing Screw for Trimming Driver Radiator(A)	97	M-3-10
06-001C-SE50	Fixing Screw for Drive	98	M-3-22
06003SW-2111	Washer (@4)	19	B-4-9
06003SW-2111	Washer (@4)	19	B-4-18
06003SW-2111	Washer (@4)	33	D-3-11
06003SW-2111	Washer (@4)	34	D-4-3
06003SW-2111	Washer (@4)	41	F-1-28
06003SW-2111	Washer (4@-S)	49	G-2-11
06003SW-2111	Washer (@4)	78	I-4-21
06003SW-2111	Washer (@4)	81	J-2-8
06003SW-2111	Washer(@4)	81	J-2-13
06003SW-2111	Washer (@4)	109	P-1-16
06008SW-4013	E-Ring (@5)	19	B-4-11
06009PR-A001	Jump Clutch Plate Spring	19	B-4-14
06010AF-8118	Plus Screw (M3*L4)	78	I-4-9
06010SC-8118	Plus Screw (M3*L4)	19	B-4-15
06010SC-8118	Plus Screw (M3*L4)	46	F-4-22
06010SC-8118	Plus Screw (M3*L4)	77	I-3-8
06011SW-2111	Washer (@3)	19	B-4-16
06011SW-2111	Washer (@3)	24	C-2-14
06011SW-2111	Washer (@3)	25	C-3-4
06011SW-2111	Washer (@3)	30	D-1-27
06011SW-2111	Washer (@3)	32	D-2-7
06011SW-2111	Washer (@3)	44	F-3-23
06011SW-2111	Washer (@3)	55	H1-3-9
06011SW-2111	Washer(@3)	56	H1-4-14
06011SW-2111	Washer (@3)	58	H1-5-26
06011SW-2111	Washer (@3)	66	H2-3-9
06011SW-2111	Washer (@3)	69	H2-5-26
06012CW-A001	Jump Clutch	19	B-4-12
06014SN-9111	Hex.Nut	19	B-4-21
06020MC-8119	PLUSS SCREW (M6*L20)	84	K1-2-4
06020MC-8119	PLUSS SCREW (M6*L20)	87	K2-2-4
06025MC-7113	Hex. Socket Bolt (M6*L25)	30	D-1-7
06025MC-7113	Hex.Socket Bolt(M6*L25)	61	H1-7-8
06025MC-7113	Hex.Socket Bolt(M6*L25)	61	H1-7-15
06025MC-7113	Hex.Socket Bolt(M6*L25)	72	H2-7-8
06025MC-7113	Hex.Socket Bolt(M6*L25)	72	H2-7-15
06025MC-7113	Hex. Socket Bolt (M6*L25)	74	I-1-3
06060MC-4517	Hex. Socket Set Screw (M6*L6)	12	A1-2-12
07-001A-SW60	Color Change Board 6C	46	F-4-17
07003SC-A001	Take-Up Lever Screw (12C)	43	F-2-24
07-004S-SM5S	Fixing Screw for SMPS Connect Board(Set)	94	M-1-8
07-004S-SM5S	Fixing Screw for Digital SMPS(Set)	94	M-1-9
07-004S-SM5S	Fixing Screw for SMPS Bracket(A)(Set)	94	M-1-10
07-004S-SM5S	Fixing Screw for 24V SMPS(Set)	94	M-1-13
07-004S-SM5S	Fixing Screw for SMPS Bracket(B)(Set)	94	M-1-14
07-004S-SM5S	Fixing Screw for Connect Plate(Set)	95	M-2-1

Part No.	Part Name	Page	Ref.No
07-004S-SM5S	Fixing Screw Noise Filter(Set)	95	M-2-3
07-004S-SM5S	Fixing Screw For Connect Board(Set)	95	M-2-5
07-004S-SM5S	Ground Screw for Connect Plate(Set)	95	M-2-7
07-004S-SM5S	Fixing Screw for Surge Protector(Set)	96	M-2-22
07-004S-SM5S	Fixing Screw for Driver Fixing Plate(Set)	97	M-3-2
07-004S-SM5S	Fixing Screw for J/B Fixing Bracket(Set)	97	M-3-8
07-004S-SM5S	Fixing Screw for Trimming Driver Bracket A(Set)	97	M-3-16
07-004S-SM5S	Fixing Screw for Drive Fixing Bracket A(Set)	98	M-3-23
07-004S-SM5S	Screw for Fixing Bracket for OP	99	M-4-3
07-004S-SM5S	Rear Cover Fixing Screw (M4xL10)	100	M-4-21
07005BM-T121	Take-Up Lever Set	43	F-2-20
07-005S-SM5S	CPU Board Screw (SET) (M3xL10)	99	M-4-17
07-005S-SM5S	IO Board Fixing Screw (SET)	99	M-4-21
07009SC-4517	Hex.Socket Set Screw (M5*L6)	43	F-2-28
07016SC-4113	Hex.Socket Bolt(M4 x L12)	20	B-5-14
07016SC-7113	Hex. Socket Bolt (M4*L12)	81	J-2-6
07016SC-7113	Hex.Socket Bolt(M4*L12)	114	Q1-2-6
07016SC-7113	Hex.Socket Bolt(M4*L12)	119	Q2-2-6
07018SC-8118	Plus Screw (M3*L8)	77	I-3-4
07035SC-7113	Hex.Scoket Bolt (M3*L6)	24	C-2-11
07035SC-7113	Bracket Screw (M3*L6)	25	C-3-2
07035SC-7113	BRACKET SCREW (M3*L6)	30	D-1-25
07035SC-7113	Bracket Screw (M3*L6)	58	H1-5-25
07035SC-7113	Bracket Screw (M3*L6)	69	H2-5-25
07035SC-7113	Bracket Screw (M3*L6)	74	I-1-13
07102CM-A001	Eyelet "C" (6C)	43	F-2-22
08000100B009	Y-Axis Rail Guide	70	H2-6-2
08000100BEK0	COLOR CHANGE SHAFT "B"(L1958)	45	F-3-28
08000200B009	V-Rail Bracket	70	H2-6-1
08000700B000	Bracket	60	H1-6-48
08000700B000	Bracket	71	H2-6-48
08000803I000	TENSION PLATE COVER (9C)	50	G-3-8
08000804I000	TENSION PLATE COVER (12C)	50	G-3-8
08-002M-SW67	Stud for Trimming Driver(A)	98	M-3-34
08003202B000	Cover Plate (R) 6C	50	G-3-3
08003203B000	Cover Plate (R) 9C	50	G-3-3
08003204B000	Cover Plate (R) 12C	50	G-3-3
08006SC-8118	Hex.Socket Screw (M3xL5)	36	E-1-23
08006SC-8118	Hex.Socket Bolt (M3*L5)	38	E-2-2
08006SC-8118	Hex.Socket Screw(M3xL5)	38	E-2-6
08011SC-8118	Screw (M2*L4)	49	G-2-4
08011SW-1111	Spring Washer (@3-S)	25	C-3-3
08012CW-T121	Connecting Plate Stud Screw	78	I-4-14
08013CL-B001	Movable Mes	34	D-4-10
08014FU-B001	Movable Mes Shaft (New)	34	D-4-9
08014SC-A001	Plus Screw (M3*L8)	34	D-4-11
08015PM-A001	Bushing	78	I-4-16
08017SC-B001	Screw (M3*L5)	34	D-4-12
08022SC-A001	Lever Stud	34	D-4-18
08023CW-A001	Mes Shaft Cramp	34	D-4-19
08025PR-B001	Mes Connecting Lever	34	D-4-17
08041SW-1111	Washer (@8-S)	59	H1-6-7
08041SW-1111	Washer (@8-S)	59	H1-6-12

Part No.	Part Name	Page	Ref.No
08041SW-1111	Washer (@8-S)	70	H2-6-7
08041SW-1111	Washer (@8-S)	70	H2-6-12
08044SR-4013	E-Ring (@8)	46	F-4-5
08049SP-A001	Lever Return Spring	33	D-3-9
08057SW-1111	Washer (@6)	44	F-3-17
08057SW-1111	Washer (@6)	52	H1-1-11
08057SW-1111	Washer (@6)	56	H1-4-13
08057SW-1111	Washer (@6)	63	H2-1-11
08057SW-1111	Washer (@6)	67	H2-4-13
08057SW-1111	Washer (@6)	68	H2-4-47
08057SW-1111	Washer (@6)	74	I-1-5
08057SW-1111	Washer (@6)	75	I-1-49
08057SW-1111	Washer (@6)	84	K1-2-10
08057SW-1111	Washer (@6)	86	K2-1-22
08057SW-1111	Washer (@6)	87	K2-2-10
08057SW-1111	Washer (@6)	90	L-1-14
08057SW-1111	Washer (@6)	114	Q1-2-24
08057SW-1111	Washer (@6)	119	Q2-2-24
08062SC-4113	Hex.Socket Bolt(M5*L20)	54	H1-2-2
08062SC-4113	Hex.Socket Bolt(M5*L20)	61	H1-7-2
08062SC-4113	Hex.Socket Bolt(M5*L20)	65	H2-2-2
08062SC-4113	Hex.Socket Bolt(M5*L20)	72	H2-7-2
08062SC-7113	Hex. Socket Bolt (M5*L20)	30	D-1-14
08065CW-A001	Stopper Collar	30	D-1-19
08067RB-A001	O-Ring (@10)	30	D-1-21
08070SW-9115	Spring Washer (@8)	54	H1-2-3
08070SW-9115	Spring Washer (@8)	61	H1-7-3
08070SW-9115	Spring Washer (@8)	65	H2-2-3
08070SW-9115	Spring Washer (@8)	72	H2-7-3
08076SC-7113	Hex. Socket Bolt (M5*L12)	25	C-3-6
08076SC-7113	Hes.Socket Bolt(M5*L15)	91	L-1-28
08076SC-7113	Hex. Socket Bolt (M5*L12)	92	L-2-7
08080MC-4113	HEX.SOCKET BOLT (M8*L80)	39	E-3-10
08087SC-7113	Hex.Socket Bolt(M8*L25)	54	H1-2-6
08087SC-7113	Hex.Socket Bolt(M8*L25)	54	H1-2-10
08087SC-7113	Hex.Socket Bolt(M8*L25)	65	H2-2-6
08087SC-7113	Hex.Socket Bolt(M8*L25)	65	H2-2-10
08088PR-B001	Mes Driving Box Cover	83	K1-1-6
08088PR-B001	Mes Driving Box Cover	86	K2-1-5
08091SC-7113	Hex,Socket Bolt (M6×L20)	36	E-1-29
08091SC-7113	Hex,Socket Bolt (M8×L10)	37	E-1-37
08091SC-7113	Hex.Socket Bolt(M6*L20)	54	H1-2-27
08091SC-7113	Hex.Socket Bolt(M6*L20)	61	H1-7-6
08091SC-7113	Hex.Socket Bolt(M6*L20)	72	H2-7-6
08091SC-7113	Hex. Socket Bolt (M6*L20)	75	I-1-47
08091SC-7113	Hex. Socket Bolt (M6*L20)	84	K1-2-8
08091SC-7113	Hex. Socket Bolt (M6*L20)	87	K2-2-8
08091SC-7113	Hex. Socket Bolt (M6*L20)	90	L-1-12
08098SC-8118	Plus Screw (M3*L4.5)	34	D-4-5
08101003B000	Cam Shaft (6,9C)	45	F-3-34
08101100B000	Cam Bushing	44	F-3-10
08101500B000	Half Turn Bushing	45	F-3-32
08101500B000	Half Turn Bushing	46	F-4-13

R. Index

Part No.	Part Name	Page	Ref.No
08101700B000	Half Turn Film	46	F-4-4
08101SC-8329	Tapping Screw (M3*L16)	83	K1-1-7
08101SC-8329	Tapping Screw (@3*L16)	83	K1-1-9
08101SC-8329	Tapping Screw (M3*L16)	83	K1-1-13
08101SC-8329	Tapping Screw (M3*L16)	83	K1-1-23
08101SC-8329	Tapping Screw (M3*L16)	86	K2-1-6
08101SC-8329	Tapping Screw (@3*L16)	86	K2-1-8
08101SC-8329	Tapping Screw (M3*L16)	86	K2-1-26
08101SC-8329	Tapping Screw (M3*L16)	86	K2-1-30
08102900B000	Motor Gear	46	F-4-2
08103203B000	Guide Shaft	45	F-3-33
08106200B000	Magnet Holder Spacer	44	F-3-21
08110FH-B001	Mes Driving Crank	34	D-4-15
08113SC-A001	Collar Screw (11/64, L6)	33	D-3-4
08113SC-A001	Collar Screw (11/64, L6)	34	D-4-14
08113SC-A001	Collar Screw (11/64, L6)	75	I-1-46
08200503A000	Take-Up Lever Shaft (9C)	43	F-2-27
08200800A000	Take-Up Lever Shaft Bush(R)	43	F-2-26
08201304H000	Head Rail	42	F-1-34
08202000A000	Tension Plate Holder (6,9C)	48	G-1-15
08202000I000	Tension Plate Holder (12C)	48	G-1-15
08203000A000	Take-Up Lever Shaft Bush(L)	43	F-2-25
08300003I000	TENSION UNIT Assy (9C)	48	G-1-19
08300102I000	TENSION UNIT (6C)	48	G-1-1
08300103I000	TENSION UNIT (9C)	48	G-1-1
08300104I000	TENSION UNIT (12C)	48	G-1-1
08300202I000	BOARD BASE (6C)	49	G-2-9
08300203I000	BOARD BASE (9C)	49	G-2-9
08300204I000	BOARD BASE (12C)	49	G-2-9
08300302I000	CONNECTION PLATE (6C)	50	G-3-4
08300303I000	CONNECTION PLATE "A" (9C)	50	G-3-4
08300304I000	CONNECTION PLATE (12C)	50	G-3-4
08300400A000	Lamp Cover	49	G-2-16
08300403I000	CONNECTION PLATE "B" (9C)	50	G-3-4
08300702I000	Roller Base Ass'Y (6C)	49	G-2-2
08300703I000	Roller Base Ass'Y (9C)	49	G-2-2
08300704I000	Roller Base Ass'Y (12C)	49	G-2-2
08308300B000	Thread Detecting Wheel Stud	49	G-2-5
08310000B000	Tension Adjusting Set	48	G-1-14
08320000I000	SUB TENSION ADJUSTING SET	48	G-1-5
08400010B000	Y-Axis Feed Plate "D"	59	H1-6-34
08400010B000	Y-Axis Feed Plate "D"	70	H2-6-34
08400010B004	Main V-Rail Assy	60	H1-6-56
08500000I000	Wiper Assy	76	I-2-22
08600003B000	Upper Thread Presser Base Assy	77	I-3-11
09000200H000	TOP SHAFT COVER BRACKET (L)	110	P-2-7
09000300B000	Magnet Sticker	45	F-3-37
09000400B000	Guide Bush (A)	90	L-1-10
09000500B000	Emergency Switch Plate	90	L-1-16
09000600B000	ON/OFF S/W BOX COVER	90	L-1-4
09000700B000	BALLAST	102	N-1-14
09001100BT00	Magnetic Switch (SET) (1@)	103	N-2-24
09001110BT00	Magnetic Switch (SET)	103	N-2-24

Part No.	Part Name	Page	Ref.No
09001400BT00	CEMENT RESISTANCE (4.7/20W)	90	L-1-23
09005SC-3123	Hex.Socket Bolt(M4*L10)	43	F-2-10
09005SC-3123	Truss Screw (M3*L6)	48	G-1-9
09005SC-3123	Toothed Lock Washer	48	G-1-12
09005SC-3123	Truss Screw (M3*L6)	49	G-2-15
09005SC-3123	Truss Screw (M3*L6)	50	G-3-5
09005SC-3123	Truss Screw (M3*L6)	59	H1-6-28
09005SC-3123	Truss Screw (M3*L6)	70	H2-6-28
09005SC-3123	SCREW(M3*L6)	87	K2-2-32
09007SC-7113	Hex. Socket Bolt (M3*L12)	32	D-2-6
09-023C-SC53	Q.C Passed Sticker	94	M-1-17
09-023C-SC53	QC Passed Sticker	99	M-4-35
09026PR-AB00	Upper Thread Presser Base 12C	77	I-3-1
09027ET-AB00	Velcro 12C	77	I-3-2
09029PR-AB00	Presser Base Cover 12C	77	I-3-3
09030PR-A002	Upper Thread Presser Base 9C	77	I-3-1
09031ET-A002	Velcro 9C	77	I-3-2
09033PR-A002	Presser Base Cover 9C	77	I-3-3
09034PR-AE00	Upper Thread Presser Base 6C	77	I-3-1
09035ET-AE00	Velcro 6C	77	I-3-2
09037PR-AE00	Presser Base Cover 6C	77	I-3-3
09038CW-A001	Thread Presser Space	77	I-3-5
09040PR-A001	Bracket (L)	77	I-3-6
09041PR-A001	Bracket (R)	77	I-3-7
09044PR-A001	Upper Thread Holder Disk "A" Set	77	I-3-10
09200100B000	Washer (Pvc)	102	N-1-23
096440C-8119	Spring Adjusting Screw	43	F-2-13
096440N-3211	Spring Adjusting Nut (9/64,N40	43	F-2-14
10000100A000	Thread Guide (L=200)	80	J-1-6
10000200B000	Spool Plate Washer	80	J-1-5
10000600I004	Frame Guide Rail Plate	114	Q1-2-19
10000600I004	Frame Guide Rail Plate	119	Q2-2-19
10000700I000	Insert Bushing	114	Q1-2-20
10000700I000	Insert Bushing	119	Q2-2-20
10000800I000	Insert Bushing Washer	114	Q1-2-21
10000800I000	Insert Bushing Washer	119	Q2-2-21
10001AF-A001	Picker	78	I-4-19
10-001C-AT10	Insulation Bush(A)	99	M-4-31
10-002S-SW66	IO Board 접지나사 (SET) (M3XL8)	99	M-4-34
10-003M-PT01	Fixing Screw for Front Cover(Truss)	94	M-1-19
10-003M-PT01	Fixing Screw for Side Cover(Truss)	95	M-2-19
10-003M-PT01	Fixing Screw for Rear Cover(Truss)	98	M-3-28
10-003M-PT01	Fixing Screw (M4xL8)	100	M-4-14
10-003S-SW66	Spring Washer	95	M-2-9
10-004A-SW70	FDD	100	M-4-25
10004CW-A001	Picker Holder	78	I-4-17
10-004M-SW68	Fixing Screw for Trimming Driver Radiator(B)	97	M-3-12
10-004S-SW66	Washer	95	M-2-10
10006FU-A001	Picker Connecting Crank	78	I-4-15
10009EL-A002	UPPER THREAD CATCHER SOL.	24	C-2-12
10010SC-8119	Plus Screw (M3*L5)	78	I-4-5
10011SC-8119	PLUS SCREW (M3*L6)	115	Q1-2-27
10011SC-8119	PLUS SCREW (M3*L6)	120	Q2-2-27

Part No.	Part Name	Page	Ref.No
10011SP-A001	Sol. Spring	78	I-4-6
10-012M-PT10	Stud for Joint Board	97	M-3-6
10-012M-PT10	Stud for Trimming Driver(B)	97	M-3-14
10012RB-A001	Cushion Washer	78	I-4-7
10013PM-A001	Picker Sol. Cover	78	I-4-4
10013PM-A001	Picker Sol. Cover	78	I-4-8
10015PR-A001	Picker Sol. Base	78	I-4-10
10-016M-SW66	Fixing Screw for Transformer A	95	M-2-8
10017RB-A001	Picker Stopper	33	D-3-5
10019PR-A001	Connecting Link	78	I-4-12
10-021M-SW66	Fixing Screw for Joint Board(Set)	97	M-3-7
10-021M-SW66	Fixing Screw for Trimming Driver (Set)	97	M-3-15
10021SC-A001	Sol. Stud Screw	78	I-4-13
10-027C-SC53	Magnet	44	F-3-20
10-028S-SC53	Screw for Pressing Plate (M3xL7)	99	M-4-12
10-028S-SC53	Speaker Fixing Screw	99	M-4-25
10-028S-SC53	Fixing Screw for SB DDC Radiator(SET) (M3xL7)	99	M-4-29
10-028S-SC53	Inverter Fixing Plate (M3xL7)	99	M-4-33
10-042M-AU10	Fixing Screw for Trimming Driver BracketB(Set)	97	M-3-17
10-042M-AU10	Fixing Screw for Drive Fixing Bracket B(Set)	98	M-3-24
10-072S-SW70	Fixing Screw for External Concept	95	M-2-14
10200103B000	Head Face Plate (U) 9C	43	F-2-1
10300003A000	THREAD GUIDE (M) SET (9C)	43	F-2-4
10400003B000	Thread Guide(L) Set	43	F-2-11
10400304B000	Spring Holder	43	F-2-15
10500200B000	FELT ATTACHMENT	113	Q1-1-36
10500200B000	FELT ATTACHMENT	118	Q2-1-36
10500300B000	FRONT FELT (A)	113	Q1-1-37
10500300B000	FRONT FELT (A)	118	Q2-1-37
10500700IDK0	Frame (A) [L=6276]	112	Q1-1-1
10500700IDK0	Frame (A) [L=6276]	117	Q2-1-1
10500800IDK0	Frame (B) [L=6276]	112	Q1-1-2
10500800IDK0	Frame (B) [L=6276]	117	Q2-1-2
10500900I004	Frame (D) [L=939]	112	Q1-1-3
10500900I004	Frame (D) [L=939]	117	Q2-1-3
10501410IDK0	Frame (C-1) [L=6121]	112	Q1-1-11
10501410IDK0	Frame (C-1) [L=6121]	117	Q2-1-11
10501510IDK0	Frame (C-2) [L=6176]	112	Q1-1-13
10501510IDK0	Frame (C-2) [L=6176]	117	Q2-1-13
10501610I004	Frame (C-3) [L=838.5]	112	Q1-1-15
10501610I004	Frame (C-3) [L=838.5]	117	Q2-1-15
10501710I004	Frame (C-4) [L=838.5]	112	Q1-1-17
10501710I004	Frame (C-4) [L=838.5]	117	Q2-1-17
10501800ID00	Frame Guide Rail Plate A [L=439]	112	Q1-1-20
10501800ID00	Frame Guide Rail Plate A [L=439]	117	Q2-1-20
10501900I000	Felt(A)	112	Q1-1-35
10501900I000	Felt(A)	117	Q2-1-35
10507400B000	Roller Position Adjusting Pin	60	H1-6-50
10507400B000	Roller Position Adjusting Pin	71	H2-6-50
1051001BEK9	Frame Assy	118	Q2-1-45
10510800B000	ROLLER PIN	114	Q1-2-12
10510800B000	ROLLER PIN	119	Q2-2-12
10600100H000	Angle Frame	81	J-2-9

R. Index

Part No.	Part Name	Page	Ref.No
10600403BHI0	Angle "C"	81	J-2-3
10600513BHI0	Angle "D"	81	J-2-4
10600600H000	Angle Base	81	J-2-10
10601403BHI0	Spool Plate A	80	J-1-1
10601503BHI0	Spool Plate B	80	J-1-2
10700003BHIO	Spool Plate Assy	80	J-1-14
11009EL-A001	Jumping Sol.	19	B-4-20
11009PR-B001	Thread Breakage Detecting Plat	48	G-1-8
11009SC-A001	Stud Screw	50	G-3-6
11012PR-B001	Thread Guide	43	F-2-9
11012PR-B001	Thread Guide (New)	48	G-1-11
11012PR-B001	Thread Guide (New)	48	G-1-11
11012PR-B001	Thread Guide (New)	48	G-1-11
11014SN-1211	Hex. Nut (M3)	48	G-1-13
11014SN-1211	Hex. Nut (M3)	76	I-2-11
11019SW-9115	Spring Washer (@3)	30	D-1-26
11019SW-9115	Spring Washer (3@)	55	H1-3-8
11019SW-9115	Spring Washer (3@)	58	H1-5-7
11019SW-9115	Spring Washer (3@)	66	H2-3-8
11019SW-9115	Spring Washer(@3)	69	H2-5-7
11019SW-9115	Spring Washer (@3)	76	I-2-10
11019SW-9115	Spring Washer (@3)	92	L-2-5
11021SC-4113	Hex. Socket Bolt (M4*L35)	103	N-2-7
11021SC-4113	Hex. Socket Bolt (M4*L35)	104	N-3-7
11029SC-4113	Hex. Socket Bolt (M4*L20)	48	G-1-16
11029SC-4113	Hex. Socket Bolt (M4*L20)	48	G-1-18
11029SC-4113	Hex. Socket Bolt (M4*L20)	76	I-2-21
11031PR-AB00	Cover Plate 12C	50	G-3-1
11032PR-A002	Cover Plate 9C	50	G-3-1
11033PR-AE00	Cover Plate 6C	50	G-3-1
11046PR-AB00	Cable Support Plate	43	F-2-29
11047PR-A002	Cable Support Plate	43	F-2-29
11049SC-A001	Board Stud Bolt	92	L-2-2
11075PM-B001	Thread Sensor Roller(B1)Set	49	G-2-1
11083CW-B001	Thread Detecting Wheel Stud	49	G-2-5
11101200T000	Upper Dead Point Stopper	41	F-1-14
120001003BHI9	Membrane Switch	46	F-4-14
12000100BHI0	Cable Cover (D)	102	N-1-4
12000100H000	Rubber For Body Support	109	P-1-19
12000110B000	NEEDEL PLATE SET	78	I-4-22
12000200B000	CABLE COVER PLATE	102	N-1-7
12000200B009	TABLE SUPPORT BAR B	87	K2-2-19
12000200B009	TABLE SUPPORT BAR B	87	K2-2-24
12000400B000	NEEDLE PLATE ATTACHMENT	78	I-4-24
12000610F000	Body Cover (B)	109	P-1-3
12001100I000	BEAM SIDE COVER	109	P-1-1
12001110BT00	Body Cover (D)	109	P-1-6
12002000I000	X-Y Axis Servo Motor Cover	54	H1-2-31
12002000I000	Y-Axis Servo Motor Cover A	61	H1-7-30
12002000I000	X-Y Axis Servo Motor Cover	65	H2-2-31
12002000I000	Y-Axis Servo Motor Cover A	72	H2-7-30
12009SC-A001	Spool Post	80	J-1-9
12010000B009	TABLE SUPPORT BAR BRACKET	87	K2-2-20

Part No.	Part Name	Page	Ref.No
12010SN-1211	Hex.Nut (M5-No2)	80	J-1-12
12012PM-A001	Spool Holder	80	J-1-7
12012-PM-A001	Spool Holder	106	O-1-5
12013SC-A001	Spool Plate Fixing Bolt(M8*L22)	11	A1-1-7
12014SC-A001	Spool Stand Bolt	11	A1-1-4
12019AD-A021	Angle "A"	81	J-2-1
12020AD-A021	Angle "B"	81	J-2-2
12042PM-A001	Eyelet	81	J-2-18
12049SF-A001	Felt	80	J-1-13
12052SF-A001	Spool Sponge	80	J-1-8
12100310B000	Body Cover (C)	109	P-1-5
12101000I000	Bearing Cover (A)	36	E-1-22
12101100I000	Bearing Cover (B)	38	E-2-5
12300900I000	Mount	11	A1-1-2
13006BM-AB00	Color Change Cam Ass'Y 12C	44	F-3-5
13007BM-AC00	Color Change Cam Ass'Y 9C	44	F-3-5
13008BM-AE00	Color Change Cam Ass'Y	44	F-3-5
13008GA-A001	Color Change Cam Gear	44	F-3-7
13009SF-AB00	Cam Shaft (12C)	45	F-3-34
13018PR-A001	Half Turn Film Washer "A" (T2.3)	46	F-4-6
13019PR-A001	Half Turn Film Washer "B" (T1)	46	F-4-7
13023EL-A001	Half Turn Sensor	46	F-4-24
13025PM-A001	Sensor Cover	46	F-4-10
13028MT-A001	Color Change Motor Unit	46	F-4-1
13030SC-4517	Hex. Socket Set Screw (M4*L8)	46	F-4-3
13031SH-AB00	Guide Shaft 12C	45	F-3-33
13034AD-A001	Color Change Block	44	F-3-11
13035BR-A001	Guide Bushing	44	F-3-12
13036PR-A001	Magnet Holder	44	F-3-19
13042SN-1111	Hex. Nut (M6*T5-R)	30	D-1-22
13042SN-1111	Hex. Nut (M6*T5-R)	44	F-3-18
13042SN-1111	Hex. Nut (M6*T5-R)	44	F-3-25
13042SN-1111	Hex. Nut (M6*T5-R)	45	F-3-29
13042SN-1111	Hex. Nut (M6*T5-R)	74	I-1-20
13042SN-1111	Hex. Nut (M6*T5-R)	74	I-1-30
13042SN-1111	Hex. Nut (M6*T5-R)	84	K1-2-11
13042SN-1111	Hex. Nut (M6*T5-R)	87	K2-2-11
13044SR-4013	E-Ring (@4)	44	F-3-16
13044SR-4013	E-Ring (@4)	78	I-4-28
13048SC-A001	Bracket"A" Screw	110	P-2-4
13052PR-AB00	Membrane Switch Cover 12C	46	F-4-15
13053PR-A005	Membrane Switch Cover 6,9C	46	F-4-15
13054SC-3123	Truss Screw (M3*L8)	106	O-1-19
13059ET-AB00	Board Cover 12C	46	F-4-19
13060ET-A005	Board Cover 6,9C	46	F-4-19
13061SC-8119	Plus Screw (M3*L10)	46	F-4-20
13061SC-8119	Plus Screw (M3*L10)	74	I-1-15
14002SC-7113	Hex.Socket Bolt (M6*L15)	30	D-1-2
14002SC-7113	Hex.Socket Set Screw(M6*L15)	53	H1-1-36

Part No.	Part Name	Page	Ref.No
14002SC-7113	Hex.Socket Bolt (M6*L15)	57	H1-4-38
14002SC-7113	Hex.Socket Set Screw(M6*L15)	63	H2-1-36
14002SC-7113	Hex.Socket Bolt (M6*L15)	68	H2-4-37
14003SC-4113	Hex. Socket Bolt (M8*L25)	30	D-1-4
14006SC-4113	Hex. Socket Bolt (M8*L15)	59	H1-6-22
14006SC-4113	Hex. Socket Bolt (M8*L15)	70	H2-6-22
14006SC-7113	Hex,Socket Bolt (M8×L10)	36	E-1-12
14006SC-7113	Hex.Socket Set Screw(M8*L15)	56	H1-4-27
14006SC-7113	Hex.Socket Set Screw(M8*L15)	59	H1-6-14
14006SC-7113	HEX.SOCKET SET SCREW(M8*L15)	67	H2-4-27
14006SC-7113	Hex.Socket Set Screw(M8*L15)	70	H2-6-14
14027SC-4113	Hex.Socket Bolt (M8*L30)	39	E-3-7
14046SC-7113	Hex.Socket Bolt (M6*L30)	28	C-6-2
14046SC-7113	Hex. Socket Bolt (M6*L30)	68	H2-4-48
14058CW-A001	Collar "A"	38	E-2-10
14060AF-4517	Hex.Socket Screw(M6*L6)	30	D-1-17
14060AF-4517	Hex.Socket Screw(M6*L6)	30	D-1-30
14060AF-4517	Hex.Socket Screw(M6*L6)	36	E-1-21
14060AF-4517	Hex.Socket Screw(M6*L6)	36	E-1-26
14060AF-4517	Hex.Socket Bolt (M6*L6)	38	E-2-4
14060AF-4517	Hex.Socket Screw(M6*L6)	38	E-2-11
14060AF-4517	HEX.SOCKET SCREW(M6*L6)	44	F-3-6
14060AF-4517	HEX.SOCKET SCREW(M6*L6)	52	H1-1-35
14060AF-4517	Hex.Socket Screw(M6*L6)	53	H1-1-38
14060AF-4517	Hex.Socket Screw(M6*L6)	54	H1-2-18
14060AF-4517	Hex.Socket Screw(M6*L6)	54	H1-2-24
14060AF-4517	HEX.SOCKET SCREW(M6*L6)	57	H1-4-37
14060AF-4517	Hex.Socket Screw(M6*L6)	57	H1-4-40
14060AF-4517	Hex.Socket Set Screw(M5*L5)	61	H1-7-20
14060AF-4517	Hex.Socket Screw(M6*L6)	61	H1-7-23
14060AF-4517	HEX.SOCKET SCREW(M6*L6)	63	H2-1-35
14060AF-4517	Hex.Socket Screw(M6*L6)	64	H2-1-38
14060AF-4517	Hex.Socket Screw(M6*L6)	65	H2-2-18
14060AF-4517	Hex.Socket Screw(M6*L6)	65	H2-2-24
14060AF-4517	HEX.SOCKET SCREW(M6*L6)	68	H2-4-36
14060AF-4517	Hex.Socket Screw(M6*L6)	68	H2-4-39
14060AF-4517	Hex.Socket Set Screw(M5*L5)	72	H2-7-20
14060AF-4517	Hex.Socket Screw(M6*L6)	72	H2-7-23
14061AF-4517	Hex.Socket Screw(M8*L8)	36	E-1-31
14061AF-4517	Hex.Socket Screw(M8*L8)	38	E-2-9
14061AF-4517	Hex.Socket Screw(M8*L8)	54	H1-2-29
14061AF-4517	Hex.Socket Set Screw (M8*L8)	56	H1-4-25
14061AF-4517	Hex.Socket Screw(M8*L8)	61	H1-7-28
14061AF-4517	Hex.Socket Screw(M8*L8)	65	H2-2-29
14061AF-4517	Hex.Socket Set Screw (M8*L8)	67	H2-4-25
14061AF-4517	Hex.Socket Screw(M8*L8)	72	H2-7-28
14064SN-7311	Hex.Nut (M6-No3)	52	H1-1-21
14064SN-7311	HEX.NUT (M6-NO3)	63	H2-1-21
14068SC-4113	Hex. Socket Bolt (M10*L35)	14	A2-1-5
15001BR-B001	Cam Roller Baearing	55	H1-3-11
15001BR-B001	Cam Roller Baearing	58	H1-5-19
15001BR-B001	Cam Roller Baearing	66	H2-3-12
15001BR-B001	Cam Roller Bearing	69	H2-5-19

R. Index

Part No.	Part Name	Page	Ref.No
15002CW-B001	Cam Roller Stud (A)	55	H1-3-12
15002CW-B001	Cam Roller Stud (A)	58	H1-5-21
15002CW-B001	Cam Roller Stud (A)	66	H2-3-11
15002CW-B001	Cam Roller Stud (A)	69	H2-5-21
15003CW-B001	Cam Roller Stud (B)	55	H1-3-13
15003CW-B001	Cam Roller Stud (B)	58	H1-5-20
15003CW-B001	Cam Roller Stud (B)	66	H2-3-13
15003CW-B001	Cam Roller Stud (B)	69	H2-5-20
15017SC-4113	Hex. Socket Bolt (M8*L45)	52	H1-1-3
15017SC-4113	Hex. Socket Bolt (M8*L45)	56	H1-4-5
15017SC-4113	Hex. Socket Bolt (M8*L45)	63	H2-1-3
15017SC-4113	Hex. Socket Bolt (M8*L45)	67	H2-4-5
15019SC-4113	Hex. Socket Bolt (M8*L40)	39	E-3-2
15019SC-4113	Hex. Socket Bolt (M8*L40)	52	H1-1-3
15019SC-4113	Hex. Socket Bolt (M8*L40)	54	H1-2-13
15019SC-4113	Hex. Socket Bolt (M8*L40)	56	H1-4-5
15019SC-4113	Hex. Socket Bolt (M8*L40)	61	H1-7-11
15019SC-4113	Hex. Socket Bolt (M8*L40)	63	H2-1-3
15019SC-4113	Hex. Socket Bolt (M8*L40)	65	H2-2-13
15019SC-4113	Hex. Socket Bolt (M8*L40)	67	H2-4-5
15019SC-4113	Hex. Socket Bolt (M8*L40)	72	H2-7-11
15020SC-4113	Hex,Socket Bolt (M8*L50)	52	H1-1-24
15020SC-4113	Hex. Socket Bolt (M8X150)	59	H1-6-5
15020SC-4113	Hex,Socket Bolt (M8*L50)	63	H2-1-24
15020SC-4113	Hex. Socket Bolt (M8X150)	70	H2-6-5
15026DC-A001	Timing Pulley Tension Bracket (N)	56	H1-4-10
15026DC-A001	Timing Pulley Tension Bracket (N)	67	H2-4-10
15-026M-1000	Cable Tie	100	M-4-22
15027DC-A001	Timing Pulley Bracket (W)	52	H1-1-8
15027DC-A001	Timing Pulley Bracket (W)	56	H1-4-10
15027DC-A001	Timing Pulley Bracket (W)	63	H2-1-8
15027DC-A001	Timing Pulley Bracket (W)	67	H2-4-10
15028SC-1111	Hex. Bolt (M6*L20)	52	H1-1-9
15028SC-1111	Hex. Bolt (M6*L20)	56	H1-4-11
15028SC-1111	Hex. Bolt (M6*L20)	63	H2-1-9
15028SC-1111	Hex. Bolt (M6*L20)	67	H2-4-11
15029SN-3211	Nut(M4)	20	B-5-17
15030AD-B021	Y Cam Roller Guide Rail L=633	56	H1-4-3
15030AD-B021	Y Cam Roller Guide Rail L=633	67	H2-4-3
15033CW-B001	Y-Adjusting Shaft	56	H1-4-22
15037AD-BC11	X-Lm Guide Rail	55	H1-3-1
15037AD-BC11	X-Lm Guide Rail	66	H2-3-1
15042BR-A001	Needle Bearing (1210zz)	52	H1-1-13
15042BR-A001	Needle Bearing (1210zz)	56	H1-4-15
15042BR-A001	Needle Bearing (1210zz)	63	H2-1-13
15042BR-A001	Needle Bearing (1210zz)	67	H2-4-15
15042SC-3123	TRUSS SCREW (M4*L6)	32	D-2-9
15042SC-3123	Truss Screw (M4*L6)	106	O-1-9
15043BT-A101	BELT	66	H2-3-3
15045EL-UK01	Bid(Large)	31	D-1-41
15046ET-T121	Wire Holder	28	C-6-10
15046RB-A001	Driving Pin Washer	52	H1-1-14
15046RB-A001	Driving Pin Washer	56	H1-4-16

Part No.	Part Name	Page	Ref.No
15046RB-A001	Driving Pin Washer	63	H2-1-14
15046RB-A001	Driving Pin Washer	67	H2-4-16
15048BT-AC00	X-Driver Timing Belt (L1130)	55	H1-3-3
15048BT-AC30	X-Driver Timing Belt (L1730)	55	H1-3-3
15050BT-A021	Y-Drive Timing Belt "A" 5M*L1865 (W:35)	58	H1-5-2
15051BT-A021	Y-Drive Timing Belt "B" 5M*L1865 (W:48)	58	H1-5-2
15055PR-A001	Tension Rivet Plate (W)	52	H1-1-17
15055PR-A001	Tension Rivet Plate (W)	56	H1-4-19
15055PR-A001	Tension Rivet Plate (W)	63	H2-1-17
15055PR-A001	Tension Rivet Plate (W)	67	H2-4-19
15056PR-A001	Tension Plate (W)	52	H1-1-18
15056PR-A001	Tension Plate (W)	63	H2-1-18
15058SC-1211	Hex. Bolt (M6*L58)	52	H1-1-20
15058SC-1211	Hex. Bolt (M6*L58)	63	H2-1-20
15064SC-A001	C.S Screw (M3*L3.5)	12	A1-2-18
15067SC-A001	Hex.Socket Bolt (M4*L7)	58	H1-5-4
15067SC-A001	Hex.Socket Bolt (M4*L7)	69	H2-5-4
15071BM-A001	V-Roller Guide Set	70	H2-6-33
15074CW-B001	Rail Guide Pin "A"	60	H1-6-45
15074CW-B001	Rail Guide Pin "A"	71	H2-6-45
15074SC-A001	Stopper Stud	58	H1-5-14
15074SC-A001	Stopper Stud	69	H2-5-14
15075CW-B001	Rail Guide Pin "B"	60	H1-6-46
15075CW-B001	Rail Guide Pin "B"	71	H2-6-46
15076CW-A031	Rail Guide Pin "C' (L19.1)	60	H1-6-44
15076CW-A031	Rail Guide Pin "C' (L19.1)	71	H2-6-44
15077BR-B001	Ball Bearing (Lr606Nppu)	58	H1-5-9
15077BR-B001	Ball Bearing (Lr606Nppu)	58	H1-5-15
15077BR-B001	Ball Bearing (Lr606Nppu)	60	H1-6-37
15077BR-B001	Ball Bearing(Lr606Nppu)	69	H2-5-9
15077BR-B001	Ball Bearing (Lr606Nppu)	69	H2-5-15
15077BR-B001	Ball Bearing (Lr606Nppu)	71	H2-6-37
15077BR-B001	Ball Bearing (LR606NPPU)	114	Q1-2-9
15077BR-B001	Ball Bearing (LR606NPPU)	119	Q2-2-9
15077SW-2111	Washer (@8)	11	A1-1-8
15077SW-2111	Washer (@8)	59	H1-6-23
15077SW-2111	Washer (@8)	60	H1-6-35
15077SW-2111	Washer (@8)	70	H2-6-23
15077SW-2111	Washer (@8)	71	H2-6-35
15078SW-8113	Tooghed Lock Washer(@8)	60	H1-6-36
15078SW-8113	Tooghed Lock Washer (@8)	71	H2-6-36
15079SN-2311	Rail Guide Shaft Nut	60	H1-6-38
15079SN-2311	Rail Guide Shaft Nut	71	H2-6-38
15089SC-7119	C.S Screw (M4*L12)	52	H1-1-19
15089SC-7119	C.S SCREW (M4*L10)	63	H2-1-19
15090SC-B001	Hex.Socket Set Screw (M6*L10)	52	H1-1-7
15090SC-B001	Hex.Socket Set Screw (M6*L10)	56	H1-4-9
15090SC-B001	Hex.Socket Set Screw (M6*L10)	63	H2-1-7
15090SC-B001	Hex.Socket Set Screw (M6*L10)	67	H2-4-9
15091RB-A001	Rubber Cap (B)	59	H1-6-32
15091RB-A001	Rubber Cap (B)	70	H2-6-32
15092CW-A031	Stopper Washer	60	H1-6-41
15092CW-A031	Stopper Washer	71	H2-6-41

Part No.	Part Name	Page	Ref.No
15092RB-B001	Rubber Cap (A)	59	H1-6-31
15092RB-B001	Rubber Cap (A)	70	H2-6-31
15093AD-B001	Table Support	59	H1-6-15
15093AD-B001	Table Support	70	H2-6-15
15094AD-B001	Table Support	59	H1-6-20
15094AD-B001	Table Support(B)	70	H2-6-20
15095AD-B001	Spacer	59	H1-6-4
15095AD-B001	Spacer	70	H2-6-4
15095SW-3115	Spring Washer (@8)	12	A1-2-5
15095SW-3115	Spring Washer (@8)	21	B-6-3
15095SW-3115	Spring Washer (@8)	30	D-1-5
15095SW-3115	Pulley Box Spring Washer [Ø8]	36	E-1-3
15095SW-3115	Spring Washer (Ø8)	36	E-1-14
15095SW-3115	Spring Washer (@8)	39	E-3-3
15095SW-3115	Spring Washer (@8)	39	E-3-8
15095SW-3115	Spring Washer (@8)	44	F-3-3
15095SW-3115	Spring Washer (@8)	52	H1-1-4
15095SW-3115	Spring Washer (@8)	52	H1-1-25
15095SW-3115	Spring Washer (@8)	54	H1-2-7
15095SW-3115	Spring Washer (@8)	54	H1-2-11
15095SW-3115	Spring Washer (@8)	54	H1-2-14
15095SW-3115	Spring Washer (@8)	56	H1-4-6
15095SW-3115	Spring Washer (@8)	59	H1-6-6
15095SW-3115	Spring Washer (@8)	59	H1-6-11
15095SW-3115	Spring Washer (@8)	61	H1-7-9
15095SW-3115	Spring Washer (@8)	61	H1-7-12
15095SW-3115	Spring Washer (@8)	61	H1-7-16
15095SW-3115	Spring Washer (@8)	63	H2-1-4
15095SW-3115	Spring Washer (@8)	63	H2-1-25
15095SW-3115	Spring Washer (@8)	65	H2-2-7
15095SW-3115	Spring Washer (@8)	65	H2-2-11
15095SW-3115	Spring Washer (@8)	65	H2-2-14
15095SW-3115	SPRING WASHER (@8)	67	H2-4-6
15095SW-3115	SPRING WASHER (@8)	70	H2-6-6
15095SW-3115	SPRING WASHER (@8)	70	H2-6-11
15095SW-3115	Spring Washer (@8)	72	H2-7-9
15095SW-3115	Spring Washer (@8)	72	H2-7-12
15095SW-3115	Spring Washer (@8)	72	H2-7-16
15095SW-3115	Spring Washer (@8)	84	K1-2-6
15095SW-3115	Spring Washer (@8)	87	K2-2-6
15096CW-B001	Stud Bolt	59	H1-6-9
15096CW-B001	Stud Bolt	70	H2-6-9
15097PR-B001	Stud Bracket	59	H1-6-8
15097PR-B001	Stud Bracket	70	H2-6-8
15098CW-A001	RAIL GUIDE PIN "B"	58	H1-5-8
15098CW-A001	Rail Guide Pin "B"	58	H1-5-16
15098CW-A001	Rail Guide Pin"B"	69	H2-5-8
15098CW-A001	Rail Guide Pin "B"	69	H2-5-16
15104AF-A021	Y-Axis Rail Guide	59	H1-6-2
15106BR-A001	Flange Bearing (1280Zz)	60	H1-6-39
15106BR-A001	Flange Bearing (1280Zz)	71	H2-6-39
15107AD-B021	V-Rail Bracket	59	H1-6-1
15112PR-A001	L/M Guide Plate "A-2"	56	H1-4-32

R. Index

Part No.	Part Name	Page	Ref.No
15112PR-A001	L/M Guide Plate "A-2"	67	H2-4-2
15130AF-A001	Roller Guide	60	H1-6-40
15130AF-A001	Roller Guide	71	H2-6-40
15133CW-B001	Roller	60	H1-6-51
15133CW-B001	Roller	71	H2-6-51
15134BM-B001	Roller Bracket Ass'Y	60	H1-6-47
15134BM-B001	Roller Bracket Ass'Y	71	H2-6-47
15137PR-A001	Rail Guide Shaft Bracket	60	H1-6-42
15137PR-A001	Rail Guide Shaft Bracket	71	H2-6-42
15159SR-4013	E-Ring (3@)	60	H1-6-52
15159SR-4013	E-Ring (3@)	71	H2-6-52
15163SC-3123	Truss Screw (M3*L12)	46	F-4-25
16004CW-A021	Table Support(C)(L=490)	11	A1-1-10
16005CW-A021	Table Support(A)(L=1400)	11	A1-1-9
16005RB-A001	Table Support End Cap (L)	11	A1-1-15
16005RB-A001	Table Support End Cap (L)	14	A2-1-16
16006CW-A021	Table Support(B)(L=740)	83	K1-1-14
16007CW-A021	Table Support(E)(L=450)	83	K1-1-16
16008CW-A021	Table Support(G)(L=315)	83	K1-1-18
16009SC-4113	Hex. Socket Screw (M10*L25)	11	A1-1-11
16009SC-4113	Hex. Socket Screw (M10*L25)	14	A2-1-12
16009SC-4113	Hex. Socket Bolt	86	K2-1-20
16010SC-8330	Tapping Screw (M6*L25)	59	H1-6-19
16010SC-8330	Tapping Screw (M6*L25)	70	H2-6-19
16010SC-8330	Tapping Screw (M6*L25)	84	K1-2-16
16010SC-8330	Tapping Screw (M6*L25)	87	K2-2-18
16013CW-A001	Table Support(E)(L=320)	84	K1-2-1
16013CW-A001	Table Support(E)(L=320)	87	K2-2-1
16014CW-A001	Table Support Bracket "A"	84	K1-2-2
16014CW-A001	Table Support Bracket "A"	87	K2-2-2
16014SW-4115	Spring Washer (@8)	11	A1-1-14
16014SW-4115	Spring Washer (@8)	14	A2-1-15
16014SW-4115	Spring Washer (Ø8)	37	E-1-38
16014SW-4115	Spring Washer (@8)	74	I-1-4
16014SW-4115	Spring Washer (@8)	74	I-1-19
16014SW-4115	Spring Washer (@8)	75	I-1-48
16014SW-4115	Spring Washer (@6)	84	K1-2-9
16014SW-4115	Spring Washer (@6)	86	K2-1-21
16014SW-4115	Spring Washer (@6)	87	K2-2-9
16014SW-4115	Spring Washer (@6)	114	Q1-2-23
16014SW-4115	Spring Washer (@6)	119	Q2-2-23
16017CW-A021	Table Support(F)(L=170)	83	K1-1-17
16018SW-1111	Washer(@4)	20	B-5-16
16018SW-1111	Washer (@5)	25	C-3-8
16018SW-1111	Washer (@5)	27	C-5-7
16018SW-1111	Washer (@5)	27	C-5-15
16018SW-1111	Washer (@5)	58	H1-5-22
16018SW-1111	Washer (@5)	69	H2-5-22
16018SW-1111	Washer (@5)	92	L-2-9
16018SW-1111	Washer (@5)	102	N-1-18
16021CW-A001	Stud Bolt	84	K1-2-3
16021CW-A001	Stud Bolt	87	K2-2-3
16028SC-7113	Hex. Socket Bolt (M5*L25)	27	C-5-5

Part No.	Part Name	Page	Ref.No
16028SC-7113	Hex. Socket Bolt (M5*L25)	27	C-5-13
16035LA-A001	Low Shaft Coupling Cover B	83	K1-1-8
16035LA-A001	Low Shaft Coupling Cover B	86	K2-1-7
16043BM-A021	Table Connecting Plate (Set)	87	K2-2-12
16047BM-A021	TABLE SUPPORT BASE SET (L)	87	K2-2-19
16047PR-A021	TABLE SUPPORT PLATE	87	K2-2-22
16048RB-A021	TABLE SUPPORT PLATE RUBBER	87	K2-2-21
16049CW-A021	TABLE SUPPORT PLATE PIN	87	K2-2-23
16050CW-A021	TABLE SUPPORT BAR	87	K2-2-24
16055MT-UK06	PULSE MOTOR (103H8223-5114) (100 under)	30	D-1-31
16059MT-E131	Y MOTOR (103H8222-5212) (120 over)	30	D-1-31
16059SC-7113	Hex.Socket Bolt (M6*L12)	56	H1-4-21
16059SC-7113	Hex.Socket Bolt (M6*L12)	56	H1-4-24
16059SC-7113	HEX.SOCKET BOLT (M6*L12)	67	H2-4-21
16059SC-7113	Hex.Socket Bolt (M6*L12)	67	H2-4-24
17006SH-A001	Low Shaft "C"[1808mm]	38	E-2-15
17029SH-AF01	Mes Driving Shaft "C"	31	D-1-39
17032SH-AC01	Mes Driving Shaft "A"	31	D-1-37
17032SH-AC01	Mes Driving Shaft "B"	31	D-1-38
17032SH-AC01	COLOR CHANGE SHAFT "B"	45	F-3-28
17051SN-A001	Mes Driving Shaft Joint	31	D-1-36
17051SN-A001	Mes Driving Shaft Joint	45	F-3-31
17053SN-1111	Hex. Nut (M6*T5-L)	30	D-1-23
17053SN-1111	Hex. Nut (M6*T5-L)	45	F-3-30
17054SH-AB00	COLOR CHANGE SHAFT "A"	44	F-3-24
17055SH-A005	COLOR CHANGE SHAFT "A"	44	F-3-24
17067SH-AE00	COLOR CHANGE SHAFT "C"(L1192)	45	F-3-28
17068SH-A004	COLOR CHANGE SHAFT "D"(L1915)	45	F-3-28
18003SH-D092	Color Change Shaft	43	F-2-33
18009EL-WH06	Wheel Sensor Board (6C)	49	G-2-6
18011BM-A021	Clip [L=750mm]	113	Q1-1-44
18011BM-A021	Clip [L=750mm]	118	Q2-1-44
18014SC-7113	Hex. Socket Bolt (M4*L9)	68	H2-4-45
18014SC-7113	Hex.Socket Bolt(M4*L10)	112	Q1-1-6
18014SC-7113	Hex.Socket Bolt(M4*L10)	112	Q1-1-8
18014SC-7113	Hex.Socket Bolt(M4*L10)	112	Q1-1-10
18014SC-7113	Truss Screw (M4*L9)	112	Q1-1-21
18014SC-7113	Truss Screw (M4*L9)	114	Q1-2-22
18014SC-7113	Hex.Socket Bolt(M4*L10)	117	Q2-1-6
18014SC-7113	Hex.Socket Bolt(M4*L10)	117	Q2-1-8
18014SC-7113	Hex.Socket Bolt(M4*L10)	117	Q2-1-10
18014SC-7113	Truss Screw (M4*L9)	117	Q2-1-21
18014SC-7113	Truss Screw (M4*L9)	119	Q2-2-22
18014SW-3115	Spring Washer(@4)	20	B-5-9
18014SW-3115	Spring Washer (@4-No2)	39	E-3-14
18014SW-3115	Spring Washer (@4-No2)	55	H1-3-16
18014SW-3115	Spring Washer (@4-No2)	66	H2-3-16
18014SW-3115	Spring Washer (@4-No2)	75	I-1-52
18014SW-3115	Spring Washer (@4-No2)	76	I-2-3
18014SW-3115	Spring Washer (@4-No2)	103	N-2-8
18014SW-3115	Spring Washer (@4-No2)	104	N-3-8
18014SW-3115	Spring Washer (@4)	112	Q1-1-25
18014SW-3115	Spring Washer (@4-No2)	112	Q1-1-29

Part No.	Part Name	Page	Ref.No
18014SW-3115	Spring Washer (@4-No2)	114	Q1-2-3
18014SW-3115	Spring Washer (@4-No2)	114	Q1-2-7
18014SW-3115	SPRING WASHER (@4-NO2)	114	Q1-2-16
18014SW-3115	Spring Washer (@4)	117	Q2-1-25
18014SW-3115	Spring Washer (@4-No2)	117	Q2-1-29
18014SW-3115	Spring Washer (@4-No2)	119	Q2-2-3
18014SW-3115	Spring Washer (@4-No2)	119	Q2-2-7
18014SW-3115	SPRING WASHER (@4-NO2)	119	Q2-2-16
18015SW-3111	Washer(@4)	20	B-5-10
18015SW-3111	WASHER (4@)	26	C-4-6
18015SW-3111	Washer (4@)	28	C-6-14
18015SW-3111	Washer (4@)	39	E-3-15
18015SW-3111	WASHER (4@)	46	F-4-8
18015SW-3111	Washer (4@-S)	46	F-4-12
18015SW-3111	Washer (4@-S)	55	H1-3-15
18015SW-3111	Washer (4@-S)	58	H1-5-24
18015SW-3111	Washer (4@-S)	66	H2-3-15
18015SW-3111	Washer (4@-S)	69	H2-5-24
18015SW-3111	Washer (4@-S)	75	I-1-53
18015SW-3111	Washer (4@-S)	76	I-2-4
18015SW-3111	Washer (4@)	103	N-2-9
18015SW-3111	Washer (4@)	104	N-3-9
18015SW-3111	Washer (4@)	112	Q1-1-26
18015SW-3111	Washer (4@)	112	Q1-1-30
18015SW-3111	Washer (4@)	114	Q1-2-4
18015SW-3111	Washer (4@)	114	Q1-2-8
18015SW-3111	WASHER (4@)	114	Q1-2-15
18015SW-3111	Washer (4@)	117	Q2-1-26
18015SW-3111	Washer (4@)	117	Q2-1-30
18015SW-3111	Washer (4@)	119	Q2-2-4
18015SW-3111	Washer (4@)	119	Q2-2-8
18015SW-3111	WASHER (4@)	119	Q2-2-15
18033PR-UK01	OIL TUBE GUIDE	26	C-4-7
18033SC-3123	Truss Screw (M5*L6)	54	H1-2-32
18033SC-3123	Truss Screw (M5*L6)	58	H1-5-18
18033SC-3123	Truss Screw (M5*L6)	61	H1-7-31
18033SC-3123	Truss Screw (M5*L6)	65	H2-2-32
18033SC-3123	Truss Screw (M5*L6)	72	H2-7-31
18036CW-UK06	Oil Tank Cover Support	25	C-3-11
18045ET-UK01	Oil Hose L=160	26	C-4-4
18047SC-7113	Hex. Socket Bolt (M5*L15)	30	D-1-20
18047SC-7113	Hex. Socket Bolt (M5*L15)	30	D-1-32
18047SC-7113	Hex. Socket Bolt (M5*L15)	59	H1-6-16
18047SC-7113	Hex. Socket Bolt (M5*L15)	70	H2-6-16
18048SW-3115	Spring Washer (@5)	25	C-3-7
18048SW-3115	Spring Washer (@5)	27	C-5-6
18048SW-3115	Spring Washer (@5)	27	C-5-14
18048SW-3115	SPRING WASHER (5@)	30	D-1-33
18048SW-3115	SPRING WASHER (5@)	32	D-2-3
18048SW-3115	Spring Washer (@5)	33	D-3-3
18048SW-3115	Spring Washer (5@)	55	H1-3-14
18048SW-3115	Spring Washer (@5)	58	H1-5-12
18048SW-3115	Spring Washer (@5)	58	H1-5-23

R. Index

Part No.	Part Name	Page	Ref.No
18048SW-3115	Spring Washer (5@)	59	H1-6-17
18048SW-3115	Spring Washer (5@)	66	H2-3-14
18048SW-3115	SPRING WASHER (5@)	69	H2-5-12
18048SW-3115	Spring Washer (@5)	69	H2-5-23
18048SW-3115	Spring Washer (5@)	70	H2-6-17
18048SW-3115	Spring Washer (@5)	74	I-1-23
18048SW-3115	Spring Washer (@5)	80	J-1-11
18048SW-3115	Spring Washer (@5)	81	J-2-15
18048SW-3115	Spring Washer (@5)	84	K1-2-14
18048SW-3115	Spring Washer (@5)	87	K2-2-16
18048SW-3115	Spring Washer (@5)	92	L-2-3
18048SW-3115	Spring Washer (@5)	92	L-2-8
18048SW-3115	Spring Washer (@5)	102	N-1-17
18049SW-3111	WASHER (@5)	30	D-1-34
18049SW-3111	WASHER (@5)	32	D-2-4
18049SW-3111	Stud Bolt Washer(S) (@8)	54	H1-2-4
18049SW-3111	Washer (@5)	59	H1-6-18
18049SW-3111	Stud Bolt Washer(S) (@8)	61	H1-7-4
18049SW-3111	Stud Bolt Washer(S) (@8)	65	H2-2-4
18049SW-3111	Washer (@5)	70	H2-6-18
18049SW-3111	Stud Bolt Washer(S) (@8)	72	H2-7-4
18049SW-3111	Washer (@5)	74	I-1-24
18049SW-3111	Washer (@5)	80	J-1-10
18049SW-3111	Washer (@5)	84	K1-2-13
18049SW-3111	Washer (@5)	87	K2-2-15
18049SW-3111	Washer (@5)	102	N-1-6
18049SW-3111	Washer (@5)	109	P-1-13
18050AF-A001	X-Axis Guide Rail (L400)	112	Q1-1-22
18050AF-A001	X-Axis Guide Rail (L400)	117	Q2-1-22
18051CW-AC30	X-Axis Guide Rail (L700)	112	Q1-1-22
18051CW-AC30	X-Axis Guide Rail (L700)	117	Q2-1-22
18062CW-A021	Rail Guide Pin (B)	114	Q1-2-10
18062CW-A021	Rail Guide Pin (B)	119	Q2-2-10
18062SF-A001	Y-Axis Sash (L) Felt	58	H1-5-1
18062SF-A001	Y-Axis Sash (L) Felt	69	H2-5-1
18068SF-AE00	Front Felt(H)	112	Q1-1-31
18068SF-AE00	Front Felt(H)	117	Q2-1-31
18071SF-A001	Rear Felt (K) (L=135)	112	Q1-1-33
18071SF-A001	Rear Felt (K) (L=135)	117	Q2-1-33
18072SF-AD00	Rear Felt (L) (L=105)	112	Q1-1-34
18072SF-AD00	Rear Felt (L) (L=105)	117	Q2-1-34
18084PR-A001	Clip [L=300mm]	113	Q1-1-38
18084PR-A001	Clip [L=300mm]	118	Q2-1-38
18086PR-B001	Frame Clip Support	113	Q1-1-39
18086PR-B001	Frame Clip Support	118	Q2-1-39
18106PR-B001	ROLLER BRACKET	114	Q1-2-14
18106PR-B001	ROLLER BRACKET	119	Q2-2-14
18107CW-B001	ROLLER	114	Q1-2-13
18107CW-B001	ROLLER	119	Q2-2-13
18111CW-B001	Frame "E" Roller	58	H1-5-17
18111CW-B001	Frame "E" Roller	69	H2-5-17
18151SN-8311	Cap Nut(@4)	112	Q1-1-24
18151SN-8311	Cap Nut(@4)	117	Q2-1-24

Part No.	Part Name	Page	Ref.No
18153SC-3123	Truss Screw (M4*L12)	106	O-1-7
18153SC-3123	Truss Screw (M4*L12)	107	O-2-2
18154SC-9134	Plus Screw (M3*L8)	92	L-2-4
19002SC-1330	Tapping Screw (4*L16-No1)	103	N-2-2
19002SC-1330	Tapping Screw (4*L16-No1)	103	N-2-15
19002SC-1330	Tapping Screw (4*L16-No1)	104	N-3-2
19002SC-1330	Tapping Screw (4*L16-No1)	104	N-3-15
19005SC-8118	Plus Screw (M3*L20)	103	N-2-20
19005SC-8118	Plus Screw (M3*L20)	104	N-3-20
19012SP-B001	Return Spring	103	N-2-4
19012SP-B001	Return Spring	104	N-3-4
19021PM-B001	S/W Bar Guide	103	N-2-6
19021PM-B001	S/W Bar Guide	104	N-3-6
20-002B-SW70	Connecting Pressing Plate Sponge	99	M-4-11
20-006A-SW70	LCD	99	M-4-5
20009EL-B001	LAMP (32W)	102	N-1-19
20009EL-WH09	Wheel Sensor Board (9C)	49	G-2-6
20009EL-WH12	Wheel Sensor Board (12C)	49	G-2-6
20009PR-A001	Reflecting (2)	102	N-1-21
20011PR-A001	Reflecting (1)	102	N-1-20
20014ET-A001	Lamp Socket	102	N-1-11
20015PR-A001	Lamp Structure B	102	N-1-13
21002SC-8119	Plus Screw (M3-L8)	36	E-1-17
22006SC-7113	Hex. Socket Bolt (M3*L8)	27	C-5-25
22006SC-7113	HEX. SOCKET BOLT (M3*L8)	44	F-3-22
22006SC-7113	Hex. Socket Bolt (M3*L8)	55	H1-3-7
22006SC-7113	Hex. Socket Bolt (M3*L8)	58	H1-5-6
22006SC-7113	Hex. Socket Bolt (M3*L8)	66	H2-3-7
22006SC-7113	Hex.Socket Bolt(M3*L8)	69	H2-5-6
22015SC-9134	SCREW(M3*L6)	87	K2-2-33
22025SC-9134	Screw (M4*L10)	45	F-3-39
22025SC-9134	Screw (M4*L10)	102	N-1-22
22027EL-A001	Inverter	99	M-4-30
24029ET-A001	Main Power S/W	90	L-1-1
24031AF-B001	Motor Driver [SANYO : PY2A050AF]	39	E-3-16
24032ET-A001	Power Plug(3P)	90	L-1-7
25105ET-B001	Encoder Connector	25	C-3-9
27033SC-7113	Hex,Socket Bolt (M5xL20)	38	E-2-14
27076SC-8119	Hex.Socket Bolt (M3*L12)	37	E-1-36
32046SP-T121	HOLDER FOR OIL HOSE	26	C-4-8
AS-000449-00	Lamp Ass,Y	102	N-1-9
AS-000451-00	Lamp Ass,Y	102	N-1-10
AS-000556-00	SUB TENSION ADJUSTING SET(NEW)	81	J-2-14
AS-000557-00	SUB TENSION ADJUSTING SET	81	J-2-17
AS-000858-00	Upper Thread Holding Set	24	C-2-4
AS-000864-00	Color Change Box Assy	45	F-3-40
AS-000864-01	Color Change Box Assy	45	F-3-40
AS-000864-02	Color Change Box Assy	45	F-3-40
AS-000864-03	Color Change Box Assy	45	F-3-40
AS-000864-04	Color Change Box Assy	45	F-3-40
AS-000867-00	Color Change Box Cover Assy	46	F-4-28
AS-000867-01	Color Change Box Cover Assy	46	F-4-28
AS-000878-00	Y-Cam Roller Guide Plate Assy	57	H1-4-41

Part No.	Part Name	Page	Ref.No
AS-001418-00	FRAME E ENDCAP(A)SET	114	Q1-2-25
AS-001418-00	FRAME E ENDCAP(A)SET	119	Q2-2-25
AS-001418-01	FRAME E ENDCAP(A)SET	114	Q1-2-25
AS-001418-01	RAME E ENDCAP(A)SET	119	Q2-2-25
AS-001418-02	FRAME E ENDCAP(A)SET	114	Q1-2-25
AS-001418-02	FRAME E ENDCAP(A)SET	119	Q2-2-25
AS-001418-03	FRAME E ENDCAP(A)SET	114	Q1-2-25
AS-001418-03	FRAME E ENDCAP(A)SET	119	Q2-2-25
AS-001419-00	FRAME E ENDCAP B SET	114	Q1-2-26
AS-001419-00	FRAME E ENDCAP B SET	119	Q2-2-26
AS-001419-01	FRAME E ENDCAP B SET	114	Q1-2-26
AS-001419-01	FRAME E ENDCAP B SET	119	Q2-2-26
AS-001419-02	FRAME E ENDCAP B SET	115	Q1-2-26
AS-001419-02	FRAME E ENDCAP B SET	120	Q2-2-26
AS-001419-03	FRAME E ENDCAP B SET	115	Q1-2-26
AS-001419-03	FRAME E ENDCAP B SET	120	Q2-2-26
AS-003759-00	Roller Bracket Assy	60	H1-6-57
AS-003951-00	Thread Control Device Ass'y	106	O-1-11
AS-004111-00	MES CAM DRIVING BOX Assy	31	D-1-42
AS-004167-00	Jump Set	19	B-4-6
AS-004174-00	NEEDLE DRIVING CAM SET	16	B-2-1
AS-004174-01	NEEDLE DRIVING CAM SET	16	B-2-1
AS-004284-00	Transformer Ass'y(Set)	95	M-2-1
AS-004284-01	Transformer Ass'y(Set)	95	M-2-1
AS-004337-00	FDD Box (丞)	100	M-4-23
AS-004493-00	MAIN DRIVING PULLEY BOX Assy	37	E-1-41
AS-004571-00	Laser Assy	20	B-5-18
AS-004691-01	Table(Set)	83	K1-1-1
AS-004766-00	Bar Switch Sensor A Assy	103	N-2-29
AS-004766-01	Bar Switch Sensor A Assy	103	N-2-29
AS-004767-00	Bar Switch Sensor B Assy	104	N-3-27
AS-004808-00	Bed Assy	12	A1-2-19
AS-004808-01	Bed Assy	12	A1-2-19
AS-004809-00	Needle Bar Reeciprocator Set	18	B-3-19
AS-004809-01	Needle Bar Reeciprocator Set	18	B-3-19
AS-004809-02	Needle Bar Reeciprocator Set	18	B-3-19
AS-004811-00	Head Assy	42	F-1-35
AS-004811-01	Head Assy	42	F-1-35
AS-004904-00	V-Roller Guide Set	59	H1-6-33
AS-005257-00	Needle Bar Drive Lever Assy	18	B-3-32
AS-005257-01	Needle Bar Drive Lever Assy	18	B-3-32
AS-005259-00	Beam & Body	14	A2-1-1
AS-005259-01	Beam & Body	14	A2-1-1
AS-005607-00	Table(Set)	86	K2-1-1
AS-005695-00	Frame Assy	113	Q1-1-45
AS-005696-00	Beam & Body	11	A1-1-1
AS-006810-00	Angle Assy	81	J-2-19
AS-008142-00	Picker Assy	78	I-4-29
AS-008153-00	X Motor Base Assy	54	H1-2-35
AS-008153-01	X Motor Base Assy	54	H1-2-35
AS-008191-00	Main Motor Assy	39	E-3-20
AS-008193-00	Y-Motor – Base	61	H1-7-34
AS-008193-01	Y-Motor – Base	61	H1-7-34

R. Index

Part No.	Part Name	Page	Ref.No
AS-008580-00	Bracket Fixed Plate Assy	53	H1-1-40
AS-008634-00	MES MOUNTING BASE Assy	34	D-4-21
AS-008636-00	Y-Motor Base Assy	65	H2-2-35
AS-008813-00	Bracket Fixed Plate Assy	57	H1-4-42
AS-008813-00	Bracket Fixed Plate D Assy	64	H2-1-41
BD-000168-00	SURGE PROTECTOR	90	L-1-8
BD-000168-00	Surge Protector	96	M-2-21
BD-000168-01	SURGE PROTECTOR	90	L-1-8
BD-000168-01	Surge Protector	96	M-2-21
BD-000168-02	SURGE PROTECTOR	90	L-1-8
BD-000168-02	Surge Protector	96	M-2-21
BD-000177-00	OFFSET S/W BOARD	87	K2-2-34
BD-000232-00	Thread Sensing Board	92	L-2-1
BD-000232-01	Thread Sensing Board	92	L-2-1
BD-000232-02	Thread Sensing Board	92	L-2-1
BD-000232-03	Thread Sensing Board	92	L-2-1
BD-000232-04	Thread Sensing Board	92	L-2-1
BD-000232-05	Thread Sensing Board	92	L-2-1
BD-000232-06	Thread Sensing Board	92	L-2-1
BD-000232-07	Thread Sensing Board	92	L-2-1
BD-000232-08	Thread Sensing Board	92	L-2-1
BD-000232-09	Thread Sensing Board	92	L-2-1
BD-000232-10	Thread Sensing Board	92	L-2-1
BD-000232-11	Thread Sensing Board	92	L-2-1
BD-000232-12	Thread Sensing Board	92	L-2-1
BD-000232-13	Thread Sensing Board	92	L-2-1
BD-000232-14	Thread Sensing Board	92	L-2-1
BD-000244-00	Trimming Driver(B)	97	M-3-13
BD-000244-00	Trimming Driver(A)	98	M-3-33
BD-000244-01	Trimming Driver(B)	97	M-3-13
BD-000244-01	Trimming Driver(A)	98	M-3-33
BD-000244-02	Trimming Driver(B)	97	M-3-13
BD-000244-02	Trimming Driver(A)	98	M-3-33
BD-000244-03	Trimming Driver(B)	97	M-3-13
BD-000244-03	Trimming Driver(A)	98	M-3-33
BD-000244-04	Trimming Driver(B)	97	M-3-13
BD-000244-04	Trimming Driver(B)	97	M-3-13
BD-000244-04	Trimming Driver(A)	98	M-3-33
BD-000244-05	Trimming Driver(A)	98	M-3-33
BD-000256-00	Shunt Board	90	L-1-26
BD-000256-01	Shunt Board	90	L-1-26
BD-000256-02	Shunt Board	90	L-1-26
BD-000256-03	Shunt Board	90	L-1-26
BD-000256-04	Shunt Board	90	L-1-26
BD-000256-05	Shunt Board	90	L-1-26
BD-000256-06	Shunt Board	90	L-1-26
BD-000256-07	Shunt Board	90	L-1-26
BD-000299-00	CPU Board	99	M-4-14
BD-000301-00	Joint Board(A), Joint Board(B)	97	M-3-3 M-3-4
BD-000301-01	Joint Board(A), Joint Board(B)	97	M-3-3 M-3-4
BD-000301-02	Joint Board(A), Joint Board(B)	97	M-3-3 M-3-4
BD-000301-03	Joint Board(A), Joint Board(B)	97	M-3-3 M-3-4
BD-000301-04	Joint Board(A), Joint Board(B)	97	M-3-3 M-3-4

Part No.	Part Name	Page	Ref.No
BD-000301-05	Joint Board(A), Joint Board(B)	97	M-3-3 M-3-4
BD-000301-06	Joint Board(A), Joint Board(B)	97	M-3-3 M-3-4
BD-000301-07	Joint Board(A), Joint Board(B)	97	M-3-3 M-3-4
BD-000301-08	Joint Board(A), Joint Board(B)	97	M-3-3 M-3-4
BD-000301-09	Joint Board(A), Joint Board(B)	97	M-3-3 M-3-4
BD-000301-10	Joint Board(A), Joint Board(B)	97	M-3-3 M-3-4
BD-000304-00	MS Top Board	90	L-1-27
BD-000304-01	MS Top Board	90	L-1-27
BD-000304-02	MS Top Board	91	L-1-27
BD-000304-03	MS Top Board	91	L-1-27
BD-000304-04	MS Top Board	91	L-1-27
BD-000323-00	SMPS Connect Board	94	M-1-6
BD-000346-00	C-KEY Board	100	M-4-7
BD-000347-01	F-KEY Board	100	M-4-2
BD-000364-00	IO Board	99	M-4-19
BD-000365-00	Connect Board	95	M-2-4
BD-000365-01	Connect Board	95	M-2-4
BD-00396-01	Xy-Sensor Ass'Y (Tlp1204)	32	D-2-5
BE-000027-00	Top Shaft Drive Belt	39	E-3-19
CA-000321-00	Bar Sensor Cable	103	N-2-27
CA-000321-00	Bar Sensor Cable	104	N-3-25
CA-000322-00	Bar S/W To Joint Board Cable	103	N-2-26
CA-000322-00	Bar S/W To Joint Board Cable	104	N-3-24
CA-000324-00	X-Sensor To Joint Board	52	H1-1-30
CA-000324-00	X-Sensor To Joint Board	63	H2-1-30
CA-000325-00	Y-Sensor To Joint Board Cable	56	H1-4-31
CA-000325-00	Y-Sensor To Joint Board Cable	67	H2-4-31
CA-000328-00	Color Change Motor To Joint Board	46	F-4-27
CA-000328-01	Color Change Motor To Joint Board	46	F-4-27
CA-000334-00	STEP MOTOR DRIVE POWER	31	D-1-35
CA-000334-01	STEP MOTOR DRIVE POWER	31	D-1-35
CA-000334-02	STEP MOTOR DRIVE POWER	31	D-1-35
CA-000411-00	Needle Position To Joint B/D	46	F-4-23
CA-000411-01	Needle Position To Joint B/D	46	F-4-23
CA-000702-00	Main Power S/W Cable	91	L-1-29
CA-000702-01	Main Power S/W Cable	91	L-1-29
CA-000717-00	Upper Thread Hook Motor To Joint Board Cable	75	I-1-58
CA-000718-00	Wiper Sensor To Joint Board Cable	75	I-1-57
CA-000917-00	I/O S/W Connecting Connector	103	N-2-25
CA-000917-01	I/O S/W Connecting Connector	103	N-2-25
CA-000918-00	MS Top Board Cable	103	N-2-23
CA-000918-00	MS Top Board Cable	104	N-3-23
CA-000918-01	MS Top Board Cable	103	N-2-23
CA-000918-01	MS Top Board Cable	104	N-3-23
CA-001053-00	X-Motor To Control Box X-Driver Cable	54	H1-2-33
CA-001053-00	X-Motor To Control Box X-Driver Cable	65	H2-2-33
CA-001054-00	X-Motor To Encoder Cable To X-Driver Cable	54	H1-2-34
CA-001054-00	X-Motor To Encoder Cable To X-Driver Cable	65	H2-2-34
CA-001055-00	Y-Motor To Control Box Y Driver Cable	61	H1-7-32
CA-001055-00	Y-Motor To Control Box Y Driver Cable	72	H2-7-32
CA-001056-00	Y-Motor Encoder To Y Driver Cable	61	H1-7-33
CA-001056-00	Y-Motor Encoder To Y Driver Cable	72	H2-7-33
CA-001088-02	FDD Connecting Cable	100	M-4-28

Part No.	Part Name	Page	Ref.No
CL-000353-00	Cam Collar	44	F-3-8
CO-27-01	CAM FROM RETURN SENSOR	32	D-2-10
DMPD3-000002	Motor	54	H1-2-1
DMPD3-000002	Motor	61	H1-7-1
DMPD3-000002	X-Y Motor (P20B10100Dxs)	65	H2-2-1
DMPD3-000002	Motor	72	H2-7-1
DMPE1-000001	Main Motor (SFAM-1000-001)	39	E-3-1
EP-000015-00	24V SMPS	94	M-1-11
EP-000030-00	FAN	99	M-4-22
EP-000046-00	Transformer	95	M-2-1
EP-000046-01	Transformer	95	M-2-1
EP-000047-00	Noise Filter	95	M-2-2
EP-000048-00	Fan	95	M-2-17
EP-000049-00	Fuse Holder	95	M-2-12
EP-000050-00	External Concept	95	M-2-13
EP-000050-01	External Concept	95	M-2-13
EP-000067-00	SENSOR	37	E-1-35
EP-000067-00	X-Sensor	52	H1-1-28
EP-000067-00	Xy-Sensor	56	H1-4-28
EP-000067-00	X-Sensor	63	H2-1-28
EP-000067-00	Xy-Sensor Ass'Y	67	H2-4-28
EP-000067-00	SENSOR	74	I-1-14
EP-000067-00	Sensor	103	N-2-19
EP-000067-00	Sensor	104	N-3-19
EP-000078-00	Transformer A'ssy	106	O-1-6
EP-000079-00	On / Off Switch	107	O-2-3
EP-000080-00	Push Switch (Start)	107	O-2-8
EP-000081-00	Push Switch (Stop)	107	O-2-9
EP-000082-00	Switch (Select)	107	O-2-5
EP-000083-00	VR	107	O-2-7
EP-000095-00	PCB (DW-BW01)	106	O-1-8
EP-000124-00	Y-Driver	97	M-3-18
EP-000124-00	X-Driver	97	M-3-19
EP-000124-00	Main Driver	98	M-3-20
EP-000131-00	Laser	20	B-5-13
EP-008025-00	Perception Sensor Bracket X,Y	56	H1-4-30
EP-008035-00	Perception Sensor Bracket X,Y	67	H2-4-29
GP-0007472-00	Digital SMPS	94	M-1-3
GP-003620-00	Oil Tank Cover	25	C-3-10
GP-003620-01	Oil Tank Cover	25	C-3-10
GP-003620-02	Oil Tank Cover	25	C-3-10
GP-003620-03	Oil Tank Cover	25	C-3-10
GP-003757-00	TABLE SUPPORT END CAP	11	A1-1-16
GP-003757-00	TABLE SUPPORT END CAP	14	A2-1-17
GP-004228-00	TABLE CONNECTING COVER	86	K2-1-9
GP-005179-00	THREAD BREAKAGE DETECT WHEEL	49	G-2-3
GP-005184-00	SENSOR SENSING ADJUSTING RING	74	I-1-8
GP-005184-01	SENSOR SENSING ADJUSTING RING	74	I-1-8
GP-005239-00	Color Change Box 6,9C	44	F-3-1
GP-005239-01	Color Change Box 6,9C	44	F-3-1
GP-005239-02	Color Change Box 6,9C	44	F-3-1
GP-005242-00	Half Turn Gear	45	F-3-35

R. Index

Part No.	Part Name	Page	Ref.No
GP-005242-01	Half Turn Gear	45	F-3-35
GP-005255-00	Color Change Box 12C	44	F-3-1
GP-005255-01	Color Change Box 12C	44	F-3-1
GP-005255-02	Color Change Box 12C	44	F-3-1
GP-005282-00	Frame E [L=1659]	114	Q1-2-18
GP-005282-01	Frame E [L=1659]	114	Q1-2-18
GP-005282-02	Frame E [L=1659]	114	Q1-2-18
GP-005282-03	Frame E [L=1659]	114	Q1-2-18
GP-006144-00	X-Coupling Cover	86	K2-1-23
GP-006161-00	Frame E [L=1659]	119	Q2-2-18
GP-006161-01	Frame E [L=1659]	119	Q2-2-18
GP-006161-02	Frame E [L=1659]	119	Q2-2-18
GP-006161-03	Frame E [L=1659]	119	Q2-2-18
GP-006299-00	ADJUSTING BLOCK FOR BEARING	58	H1-5-10
GP-006299-00	ADJUSTING BLOCK FOR BEARING	69	H2-5-10
GP-006323-00	X-Motor Coupling Cover	83	K1-1-10
GP-006323-01	X-Motor Coupling Cover	83	K1-1-10
GP-006538-00	Y-Coupling Cover A	83	K1-1-20
GP-006538-00	Y-Coupling Cover A	86	K2-1-28
GP-006540-00	Y-Coupling Cover C	83	K1-1-21
GP-006540-00	Y-Coupling Cover C	86	K2-1-29
GP-006545-00	FELT V	115	Q1-2-28
GP-006545-00	FELT V	120	Q2-2-28
GP-006546-00	FELT W	114	Q1-2-11
GP-006546-00	FELT W	119	Q2-2-11
GP-006642-00	Main Motor Bracket	39	E-3-5
GP-006655-00	Top Shaft "A" [190mm]	36	E-1-27
GP-006914-00	Roller Bracket	59	H1-6-24
GP-006914-00	Roller Bracket	70	H2-6-24
GP-006914-01	Roller Bracket	59	H1-6-24
GP-006914-01	Roller Bracket	70	H2-6-24
GP-006914-02	Roller Bracket	59	H1-6-24
GP-006914-02	Roller Bracket	70	H2-6-24
GP-006917-00	Guide Roller	59	H1-6-30
GP-006917-00	Guide Roller	70	H2-6-30
GP-006917-01	Guide Roller	59	H1-6-30
GP-006917-01	Guide Roller	70	H2-6-30
GP-007190-00	BEARING CONNECTING BLOCK B	114	Q1-2-1
GP-007190-00	BEARING CONNECTING BLOCK B	119	Q2-2-1
GP-007190-01	BEARING CONNECTING BLOCK B	114	Q1-2-1
GP-007190-01	BEARING CONNECTING BLOCK B	119	Q2-2-1
GP-007190-02	BEARING CONNECTING BLOCK B	114	Q1-2-1
GP-007190-02	BEARING CONNECTING BLOCK B	119	Q2-2-1
GP-007216-00	Needle Bar Return Spring	41	F-1-7
GP-007216-01	Needle Bar Return Spring	41	F-1-7
GP-007325-00	Arm Guard Plate (R)	24	C-2-2
GP-008025-00	Sensor Bracket X,Y	52	H1-1-27
GP-008025-00	Sensor Bracket X,Y	63	H2-1-27
GP-008534-00	Stud Bolt	46	F-4-18
GP-008536-00	Encoder Base	25	C-3-5
GP-008997-00	Needle Plate	78	I-4-23
GP-009003-00	Lamp Socket Fixed Plate	102	N-1-12
GP-009111-00	Corner Guide(DL)	113	Q1-1-41

Part No.	Part Name	Page	Ref.No
GP-009111-00	Corner Guide(DL)	118	Q2-1-41
GP-009111-01	Corner Guide(DL)	113	Q1-1-41
GP-009111-01	Corner Guide(DL)	118	Q2-1-41
GP-009112-00	Corner Guide(DR)	113	Q1-1-40
GP-009112-00	Corner Guide(DR)	118	Q2-1-40
GP-009112-01	Corner Guide(DR)	113	Q1-1-40
GP-009112-01	Corner Guide(DR)	118	Q2-1-40
GP-009112-02	Corner Guide(DR)	113	Q1-1-40
GP-009112-02	Corner Guide(DR)	118	Q2-1-40
GP-009113-00	Corner Guide(EL)	113	Q1-1-43
GP-009113-00	Corner Guide(EL)	118	Q2-1-43
GP-009114-00	Corner Guide(ER)	113	Q1-1-42
GP-009114-00	Corner Guide(ER)	118	Q2-1-42
GP-009431-00	Side Cover	95	M-2-16
GP-009431-01	Side Cover	95	M-2-16
GP-009433-00	Fixing Bracket for Trimming Driver	97	M-3-11
GP-009434-00	Fixing Bracket for Drive	98	M-3-21
GP-009435-00	SMPS Bracket(B)	94	M-1-12
GP-009435-01	SMPS Bracket(B)	94	M-1-12
GP-009441-00	Rear Cover	98	M-3-25
GP-009442-00	Fixing Bracket for Joint Board	97	M-3-5
GP-009442-01	Fixing Bracket for Joint Board	97	M-3-5
GP-009442-02	Fixing Bracket for Joint Board	97	M-3-5
GP-009445-00	Driver Fixing Plate	97	M-3-1
GP-009445-01	Driver Fixing Plate	97	M-3-1
GP-009445-02	Driver Fixing Plate	97	M-3-1
GP-009448-00	Fixing Bracket for Core(A)	95	M-2-1
GP-009450-00	Fixing Bracket for Core(B)	95	M-2-1
GP-009451-00	Fixing Bracket for Connect Plate	95	M-2-1
GP-009453-00	Copper Plate for SMPS(A)	94	M-1-15
GP-009453-00	Copper Plate for SMPS(B)	95	M-2-1
GP-009454-00	Copper Plate for SMPS(B)	94	M-1-16
GP-009454-00	Copper Plate for SMPS(A)	95	M-2-1
GP-009455-00	Base Rubber	94	M-1-5
GP-009589-00	Oil Tank Ass'Y	26	C-4-1
GP-009590-00	Oil Tank Felt	26	C-4-2
GP-009831-00	Main Driver Sticker	98	M-3-32
GP-009832-00	X-Driver Sticker	98	M-3-30
GP-009833-00	Y-Driver Sticker	98	M-3-29
GP-009902-00	Emergency Switch Holder(A) [L=268]	90	L-1-15
GP-009936-00	Front Felt (O-1) (L=82.5)	112	Q1-1-32
GP-009936-00	Front Felt (O-1) (L=82.5)	117	Q2-1-32
GP-010089-00	Table Support Connecting Bar B	14	A2-1-11
GP-010089-00	Table Support Connecting Bar B	86	K2-1-19
GP-010089-01	Table Support Connecting Bar B	14	A2-1-11
GP-010089-01	Table Support Connecting Bar B	86	K2-1-19
GP-010089-02	Table Support Connecting Bar B	14	A2-1-11
GP-010089-02	Table Support Connecting Bar B	86	K2-1-19
GP-010089-03	Table Support Connecting Bar B	14	A2-1-11
GP-010089-03	Table Support Connecting Bar B	86	K2-1-19
GP-010149-00	Fixing Bracket for Core(D)	95	M-2-1
GP-010233-00	Bar S/W Support	103	N-2-14
GP-010233-00	Bar S/W Support	104	N-3-14

Part No.	Part Name	Page	Ref.No
GP-010262-00	Pulley Bracket Cover	38	E-2-16
GP-010263-00	Pulley Box Cover Stud	36	E-1-5
GP-010409-00	Bushing Nut(C)	112	Q1-1-19
GP-010409-00	Bushing Nut(C)	117	Q2-1-19
GP-010609-00	Rotary Hook Support	33	D-3-1
GP-010656-00	Fixing Stud for SB DDC Radiator	99	M-4-28
GP-010736-00	Stud for SMPS Connect Board	94	M-1-7
GP-010764-00	Thread Guide (L) 9C	43	F-2-12
GP-010772-00	Thread Hook Spring (9C)	43	F-2-17
GP-011913-00	Drive Lever "A" Set	16	B-1-6
GP-011914-00	Take-Up Driving Lever "B"	16	B-1-7
GP-011929-00	Needle Bar	41	F-1-6
GP-011931-00	Needle Bar Guide Rail (9C)	43	F-2-31
GP-011932-00	Needle Bar Driving Cam	17	B-2-2
GP-011932-01	Needle Bar Driving Cam	17	B-2-2
GP-011933-00	Bearing Case	20	B-5-1
GP-011933-01	Bearing Case	20	B-5-1
GP-011938-00	Take-Up Lever Cam Base	17	B-2-5
GP-011938-01	Take-Up Lever Cam Base	17	B-2-5
GP-011944-00	Head Rail	42	F-1-34
GP-011944-01	Head Rail	42	F-1-34
GP-011945-00	Color Change Bracket "B"	43	F-2-34
GP-011946-00	Color Change Bracket	110	P-2-6
GP-011947-00	Head	41	F-1-1
GP-011947-01	Head	41	F-1-1
GP-011947-02	Head	41	F-1-1
GP-011947-03	Head	41	F-1-1
GP-011947-04	Head	41	F-1-1
GP-011947-05	Head	41	F-1-1
GP-012130-00	OFFSET S/W BOX	87	K2-2-35
GP-012131-00	FIXING PLATE FOR OFFSET S/W BOX	88	K2-2-36
GP-012729-00	Radiator for Trimming Driver	97	M-3-9
GP-013117-00	NEEDLE BAR DRIVING SHAFT	18	B-3-13
GP-013196-00	Support Bracket	59	H1-6-21
GP-013196-00	ROLLER BRACKET SUPPORT	70	H2-6-21
GP-013331-00	Connecting Bracket for Laser	20	B-5-11
GP-013331-01	Connecting Bracket for Laser	20	B-5-11
GP-013332-00	Fixing Brakcet for Laser	20	B-5-12
GP-013585-00	Side Cover "A"	19	B-4-3
GP-013585-01	Side Cover "A"	19	B-4-3
GP-013586-00	Jump Sol. Bracket	19	B-4-22
GP-013587-00	Needle Bar Driving Shaft Bush	18	B-3-30
GP-013587-01	Needle Bar Driving Shaft Bush	18	B-3-30
GP-013744-00	Control Box	94	M-1-2
GP-013744-01	Control Box	94	M-1-2
GP-013744-02	Control Box	94	M-1-2
GP-013747-00	Fixing Bracket for Core(C)	95	M-2-1
GP-013747-01	Fixing Bracket for Core(C)	95	M-2-1
GP-013748-00	Connect Plate	95	M-2-1
GP-013749-00	SMPS Bracket(A)	94	M-1-4
GP-013752-00	Jumping Sol. Base Plate	19	B-4-2
GP-013752-01	Jumping Sol. Base Plate	19	B-4-2
GP-013756-00	Needle Bar Reeciprocator	18	B-3-20

R. Index

Part No.	Part Name	Page	Ref.No
GP-013758-00	Arm Guard Plate (L)	24	C-2-1
GP-013762-00	Needle Driving Shaft Driver	18	B-3-25
GP-013762-01	Needle Driving Shaft Driver	18	B-3-25
GP-013762-02	Needle Driving Shaft Driver	18	B-3-25
GP-013762-03	Needle Driving Shaft Driver	18	B-3-25
GP-013763-00	Presser Foot	41	F-1-18
GP-014274-00	Pulley for Upper Shaft Ass'y	36	E-1-30
GP-014274-01	Pulley for Upper Shaft Ass'y	36	E-1-30
GP-014250-00	Bar Switch Box (B)	103	N-2-1
GP-014251-00	Regulatory Rod	103	N-2-3
GP-014251-00	Regulatory Rod	104	N-3-3
GP-014252-00	Bar Switch Sensing Ring	103	N-2-11
GP-014252-00	Bar Switch Sensing Ring	104	N-3-11
GP-014253-00	Bar Switch Sensor Bracket	103	N-2-16
GP-014253-00	Bar Switch Sensor Bracket	104	N-3-16
GP-014254-00	Bar Switch Box Cover(C)	104	N-3-21
GP-014255-00	Bar Switch Holder Spacer	103	N-2-28
GP-014255-00	Bar Switch Holder Spacer	104	N-3-26
GP-014341-03	CPU Board Fixing Stud	99	M-4-16
GP-014343-00	Fixing Bracket for OP	100	M-4-13
GP-014343-01	Fixing Bracket for OP	100	M-4-13
GP-014345-03	Base Plate	99	M-4-2
GP-014345-03	Base Plate	100	M-4-12
GP-014346-00	Rubber For Support Base	106	O-1-18
GP-014348-03	Front Cover	100	M-4-1
GP-014349-00	Rear Cover	100	M-4-18
GP-014350-03	LCD Cover	99	M-4-4
GP-014351-00	Connector Cover	100	M-4-20
GP-014354-00	Bobbin Shaft	106	O-1-15
GP-014354-01	Bobbin Shaft	106	O-1-15
GP-014354-02	Bobbin Shaft	106	O-1-15
GP-014354-03	Bobbin Shaft	106	O-1-15
GP-014356-00	Button (Number Key)	100	M-4-8
GP-014357-00	Button (DOWN,UP Key)	100	M-4-9
GP-014359-00	Button (F-Speed Key)	100	M-4-10
GP-014360-01	Button (START,STOP Key)	100	M-4-3
GP-014361-00	Insulation Bush(A)	99	M-4-13
GP-014361-00	Insulation Bush(A)	99	M-4-18
GP-014362-00	Insulation Bush(B)	99	M-4-15
GP-014362-00	Insulation Bush(B)	99	M-4-20
GP-014363-00	Spool Support Base	106	O-1-3
GP-014365-00	Spool Support Base Sponge	106	O-1-4
GP-014366-00	Spool Post	106	O-1-2
GP-014368-00	Antenna Bar	107	O-2-11
GP-014369-00	Antenna Bar Hanger	107	O-2-10
GP-014370-00	Tension Control Holder	106	O-1-10
GP-014441-01	FDD Box	100	M-4-24
GP-014442-01	Cable Fixing Rubber	100	M-4-29
GP-014677-00	VR Knob	107	O-2-6
GP-014678-00	Fuse Holder	107	O-2-4
GP-014869-01	Cover	107	O-2-1
GP-014870-00	Base	106	O-1-1
GP-014871-00	Motor Bracket	106	O-1-14

Part No.	Part Name	Page	Ref.No
GP-014899-00	Bar Switch Box (A)	104	N-3-1
GP-014931-00	Jump Sol. Cover	19	B-4-7
GP-015067-01	Angle Bushing	100	M-4-5
GP-015068-02	Button (F Key)	100	M-4-4
GP-015069-00	Button (Move Key)	100	M-4-11
GP-015085-00	UPPER THREAD HOOK SENSOR BASE	74	I-1-12
GP-015257-00	MES CAM DRIVING BOX	30	D-1-3
GP-015264-00	Limit Sensor Base	32	D-2-1
GP-015264-01	Limit Sensor Base	32	D-2-1
GP-015265-00	Limit Sensor Plate	30	D-1-24
GP-015265-01	Limit Sensor Plate	30	D-1-24
GP-015700-00	Main Power S/W Bracket	90	L-1-2
GP-015970-00	Input voltage Sticker	95	M-2-6
GP-016274-00	Inside Sticker	98	M-3-31
GP-016274-01	Inside Sticker	98	M-3-31
GP-016393-00	Bar Switch Box Cover(B)	103	N-2-21
GP-017097-00	Laser Support Connecting Bracket	20	B-5-7
GP-017097-01	Laser Support Connecting Bracket	20	B-5-7
GP-017097-02	Laser Support Connecting Bracket	20	B-5-7
GP-017156-00	Y-Coupling Cover	83	K1-1-22
GP-017156-00	Y-Coupling Cover	86	K2-1-27
GP-017235-00	SB DDC Radiator	99	M-4-26
GP-017239-00	SB DDC Radiator Sheet	99	M-4-27
GP-017824-00	TABLE CONNECTING COVER	83	K1-1-2
GP-017824-01	TABLE CONNECTING COVER	83	K1-1-2
GP-017827-00	L.M Guide Cover A	83	K1-1-11
GP-017827-01	L.M Guide Cover A	83	K1-1-11
GP-017828-00	L.M Guide Cover C	83	K1-1-12
GP-019021-00	Insulation Bush(A)	99	M-4-7
GP-019022-00	Insulation Bush(B)	99	M-4-8
GP-020300-00	Y-Axis Timing Pulley	61	H1-7-26
GP-020300-00	Y-Axis Timing Pulley	72	H2-7-26
GP-020301-00	Driving Shaft Coupling	54	H1-2-26
GP-020301-00	Driving Shaft Coupling	61	H1-7-5
GP-020301-00	Hex.Socket Bolt(M6*L20)	65	H2-2-27
GP-020301-00	Driving Shaft Coupling	72	H2-7-5
GP-020301-01	Driving Shaft Coupling	54	H1-2-26
GP-020301-01	Driving Shaft Coupling	61	H1-7-5
GP-020301-01	Hex.Socket Bolt(M6*L20)	65	H2-2-27
GP-020301-01	Driving Shaft Coupling	72	H2-7-5
GP-020301-02	Driving Shaft Coupling	54	H1-2-26
GP-020301-02	Driving Shaft Coupling	61	H1-7-5
GP-020301-02	Hex.Socket Bolt(M6*L20)	65	H2-2-27
GP-020301-02	Driving Shaft Coupling	72	H2-7-5
GP-020302-00	X-Motor Bracket	54	H1-2-5
GP-020302-00	X-Motor Bracket	65	H2-2-5
GP-020304-00	Y-Motor Bracket	61	H1-7-14
GP-020304-00	Y-Motor Bracket	72	H2-7-14
GP-020674-00	Side Cover "B"	19	B-4-4
GP-020674-01	Side Cover "B"	19	B-4-4
GP-020679-00	Upper Thread Hook Motor Cover	75	I-1-54
GP-020679-01	Upper Thread Hook Motor Cover	75	I-1-54

Part No.	Part Name	Page	Ref.No
GP-020802-00	MAIN DRIVING PULLEY BOX	36	E-1-1
GP-020802-01	MAIN DRIVING PULLEY BOX	36	E-1-1
GP-020802-02	MAIN DRIVING PULLEY BOX	36	E-1-1
GP-020802-03	MAIN DRIVING PULLEY BOX	36	E-1-1
GP-020831-00	Arm Top Cover	23	C-1-5
GP-020831-01	Arm Top Cover	23	C-1-5
GP-020913-00	Needle Bar Drive Lever	18	B-3-1
GP-020913-01	Needle Bar Drive Lever	18	B-3-1
GP-020915-00	Presser Foot Pressure Spring	41	F-1-16
GP-020915-01	Presser Foot Pressure Spring	41	F-1-16
GP-020960-00	TAKE-UP LEVER DRIVER CAM	17	B-2-6
GP-020960-01	TAKE-UP LEVER DRIVER CAM	17	B-2-6
GP-020960-02	TAKE-UP LEVER DRIVER CAM	17	B-2-6
GP-020960-03	TAKE-UP LEVER DRIVER CAM	17	B-2-6
GP-021058-00	X-LM Guide Cover B	86	K2-1-24
GP-021059-00	X-LM Guide Cover C	86	K2-1-25
GP-021059-01	X-LM Guide Cover C	86	K2-1-25
GP-021205-00	Arm	21	B-6-1
GP-021205-01	Arm	21	B-6-1
GP-021205-02	Arm	21	B-6-1
GP-021267-00	TABLE CONNECTING COVER	86	K2-1-2
GP-021698-00	Noise Filter Box	90	L-1-24
GP-021754-00	Driving Plate Block"C"	74	I-1-21
GP-022424-00	Spacer	76	I-2-5
GP-022424-01	Spacer	76	I-2-5
GP-026495-00	Front Cover	94	M-1-18
GP-030400-00	Corner Guide (A)	112	Q1-1-5
GP-030400-00	Corner Guide (A)	117	Q2-1-5
GP-030400-01	Corner Guide (A)	112	Q1-1-5
GP-030400-01	Corner Guide (A)	117	Q2-1-5
GP-032699-00	Rotary Hook Base (Bevel)	12	A1-2-1
GP-032699-01	Rotary Hook Base (Bevel)	12	A1-2-1
GP-032699-02	Rotary Hook Base (Bevel)	12	A1-2-1
GP-037044-00	Hook Shaft Bush	12	A1-2-9
GP-037737-00	Corner Guide (C)	112	Q1-1-9
GP-037737-00	Corner Guide (C)	117	Q2-1-9
GP-037776-00	Fixing Block (A) for Bearing	114	Q1-2-5
GP-037776-00	Fixing Block (A) for Bearing	119	Q2-2-5
GP-037776-01	Fixing Block (A) for Bearing	114	Q1-2-5
GP-037776-01	Fixing Block (A) for Bearing	119	Q2-2-5
GP-037776-02	Fixing Block (A) for Bearing	114	Q1-2-5
GP-037776-02	Fixing Block (A) for Bearing	119	Q2-2-5
GP-037798-00	Frame (G) [L=939]	112	Q1-1-4
GP-037798-00	Frame (G) [L=939]	117	Q2-1-4
GP-037803-00	Corner Guide (B)	112	Q1-1-7
GP-037803-00	Corner Guide (B)	117	Q2-1-7
GP-037813-00	Fixing Block (C) for Bearing	112	Q1-1-27
GP-037813-00	Fixing Block (C) for Bearing	117	Q2-1-27
GP-038684-00	MES MOUNTING BASE	34	D-4-1
GP-044599-00	COUPLING @20	36	E-1-28
GP-044599-00	COUPLING @20	54	H1-2-20

R. Index

Part No.	Part Name	Page	Ref.No
GP-044599-00	COUPLING @20	61	H1-7-24
GP-044599-00	COUPLING @20	65	H2-2-20
GP-044776-00	Needle Bar Holder	41	F-1-12
GP-044784-00	Needle Bar Drive Rink	18	B-3-11
GP-044787-00	MOTOR DRIVING CONNECT PLATE	74	I-1-25
GP-044788-00	Connecting Rod	17	B-2-3
GP-046540-00	MOTOR BASE	74	I-1-2
GP-046540-01	MOTOR BASE	74	I-1-2
GP-052861-00	Reflecting (2)	102	N-1-21
GP-052862-00	Reflecting (1)	102	N-1-20
LWP-BK0003-00	Return Spring Stopper	74	I-1-34
LWP-BK0003-01	Return Spring Stopper	74	I-1-34
MH-01	MAIN POWER PLUG TO NFB INPUT	90	L-1-6
MH-20	Half Turn Sensor Cable	46	F-4-26
MH-28	Plate Led S/W Board Cable	49	G-2-12
MH-30	Wheel Earth 9C	50	G-3-7
MH-35-01	Sensor Board/Adjusting Plate Cable	49	G-2-13
MO-000029-00	Motor Ass'y	106	O-1-13
PN-000133-00	Roller Pin	59	H1-6-29
PN-000133-00	Roller Pin	70	H2-6-29
PN-000232-00	Jump Clutch Pin	19	B-4-10
PN-000232-01	Jump Clutch Pin	19	B-4-10
PN-000726-00	Mes Link Pin	30	D-1-10
RL-000001-00	Roller	44	F-3-15
PL-000054-00	X-Y Driving Shaft Timing Pulley	54	H1-2-25
PL-000054-00	X-Y Driving Shaft Timing Pulley	65	H2-2-25
SC-000173-00	Set Screw (M5*L4)	106	O-1-16
SC-000236-00	SCREW M4*L10	83	K1-1-3
SC-000236-00	SCREW M4*L10	86	K2-1-3
SC-000334-00	SCREW M4*L15	112	Q1-1-28
SC-000334-00	SCREW M4*L15	117	Q2-1-28
SC-000392-00	FAN Fixing Screw (M4xL30)	99	M-4-23
SC-000393-00	Fixing Screw for Transformer B	95	M-2-11
SC-000395-00	Fixing Screw for Switch Cover(Truss)	98	M-3-27
SC-000417-00	Head Rail Screw	41	F-1-2
SC-000460-00	Screw for Base Plate	99	M-4-9
SC-000545-00	FDD Fixing Screw (M3xL6)	100	M-4-27
SC-000629-00	Screw for LCD (M2×L8)	99	M-4-6
SC-000747-00	F-KEY Board Screw (ST2.9xL12)	100	M-4-6
SC-001605-00	Connecting Plate Stud Screw	74	I-1-29
SC-001729-00	STUD BOLT FOR DRIVING PLATE	74	I-1-16
SC-001729-01	STUD BOLT FOR DRIVING PLATE	74	I-1-16
SC-001729-02	STUD BOLT FOR DRIVING PLATE	74	I-1-16
SC-001903-00	Truss Screw (M4*L8)	112	Q1-1-12
SC-001903-00	Truss Screw (M4*L8)	112	Q1-1-14
SC-001903-00	Truss Screw (M4*L8)	112	Q1-1-16
SC-001903-00	Truss Screw (M4*L8)	112	Q1-1-18
SC-001903-00	Truss Screw (M4*L8)	117	Q2-1-12
SC-001903-00	Truss Screw (M4*L8)	117	Q2-1-14
SC-001903-00	Truss Screw (M4*L8)	117	Q2-1-16
SC-001903-00	Truss Screw (M4*L8)	117	Q2-1-18
SN-000164-00	TABLE INSERT NUT	83	K1-1-4

Part No.	Part Name	Page	Ref.No
SN-000164-00	TABLE INSERT NUT	86	K2-1-4
SN-000164-01	TABLE INSERT NUT	83	K1-1-4
SN-000164-01	TABLE INSERT NUT	86	K2-1-4
ST-000013-00	ROLLER SHAFT	44	F-3-14
SWF-00000344	OFFSET SWITCH BOX ASS'Y	87	K2-2-29
SWF-00000364	Control Box Ass'y	94	M-1-1
SWF-00000550	Operation Box Ass'y	99	M-4-1
WS-000083-00	@5 - Washer	58	H1-5-13
WS-000083-00	@5 - Washer	69	H2-5-13
WS-000549-00	Stud Bolt Washer	74	I-1-18
WS-000549-01	Stud Bolt Washer	74	I-1-18

Part No.	Part Name	Page	Ref.No