PARTS BOOK

SWF/GE-Series

High Speed
Multi-Head
Automatic
Embroidery Machine

PME-1100525

SUNSTAR CO., LTD.

Machine Layout

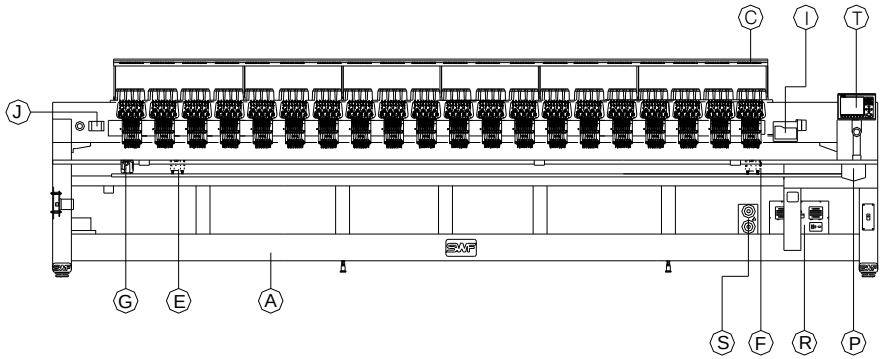

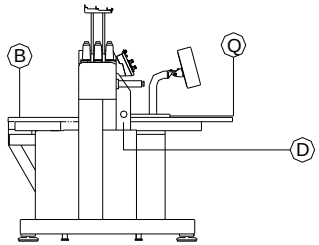

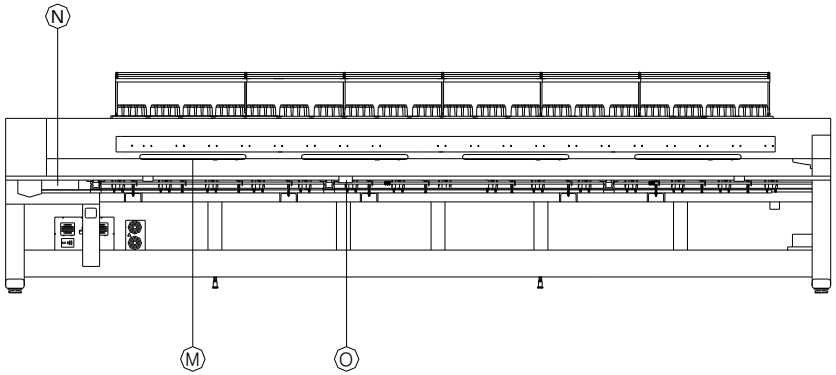

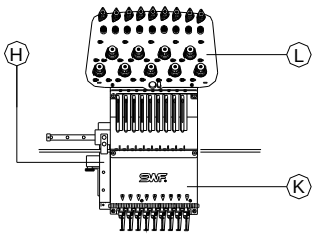

A. Machine Body Ass'y
B. Work Table
C. Thread Stand
D. Main Drive System
E. Rotary Hook Base
F. Encoder Set
G. Thread Cutting Drive System
H. Arm
I. Color Change System
J. Upper Thread Catcher Set
K. Head
L. Thread Tension Unit
M. Sub-Control Unit & lamp
N. X-Axis Drive System
O. Y-Axis Drive System
P. Bar Switch
Q. Embroidery Frame
R. Main Controller
S. X/Y Axis Driver
T. Operation Unit
U. Bobin Winder

CONTENT

A	Machine Body Ass'y (Y-Stroke 1000 Below)	7
A1	Machine Body Ass'y (Y-Stroke 1200 Below)	9
B	Work Table (Y-Stroke 1000 Below)	11
B1	Work Table (Y-Stroke 1200 Below)	13
C	Thread Stand	17
D	Main Drive System	19
E	Rotary Hook Base	21
F	Encoder Set	23
G	Thread Cutting Drive System	25
H	Arm	27
I	Color Change System	31
J	Upper Thread Catcher Set	33
K	Head	37
L	Thread Tension Unit	41
M	Sub Control Unit & Lamp	43
N	X-Axis Drive System (Y-Stroke 1000 Below)	45
N1	X-Axis Drive System (Y-Stroke 1200 Below)	47
O	Y-Axis Drive System (Y-Stroke 1000 Below)	49
O1	Y-Axis Drive System (Y-Stroke 1200 Below)	53
P	Bar Switch	57
Q	Embroidery Frame (Y-Stroke 1000 Below)	59
Q1	Embroidery Frame (Y-Stroke 1200 Below)	61
R	Main Controller	63
S	X/Y Axis Driver	65
T	Opeartion Unit	67
U	Bobbin Winder	69

1.조에 속한 파트는 개별 조립 시 제품의 파손 또는 재봉 불량이 발생될 수 있어 해당 파트에 대한 주문 시에는 조 품목으로만 구입이 가능합니다.
2. 본 책자는 Parts Book으로 제작되었으므로 매뉴얼로 사용 불가합니다.

1.The parts classified as ass'y items may cause damage to the machine or bad sewing when they are separately assembled.
Hence, when they are ordered, they can be purchased as ass'y items only.
2. This is a part book. It cannot be used as a manual.

A

Machine Body Ass'y (Y-Stroke 1000 Below)

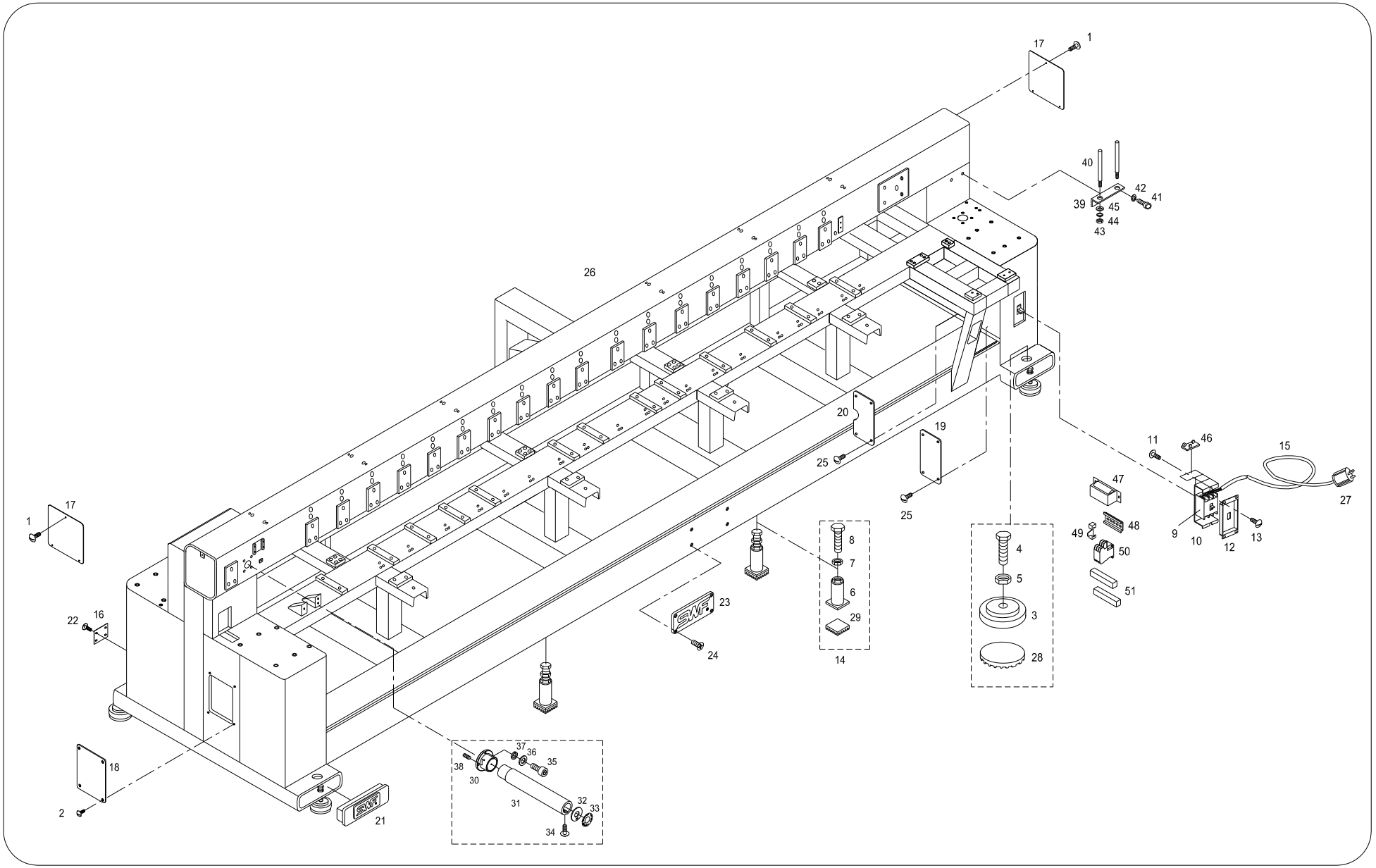

SWF/GE-Series

Ref.No	Part No.	Part Names	Q'ty
A-1	02044SC-3123	Truss Screw (M5*L8)	6
A-2	02044SC-3123	Truss Screw (M5*L8)	4
A-3	02330CW-A001	Leveling Base	4
A-4	02035SC-A001	Hex. Bolt (M20*L90)	4
A-5	02036SN-1211	Hex. Nut (M20-No2)	4
A-6	02322CW-A001	Body Support Stand Pipe (1")	4
A-7	02321SN-A001	Hex. Nut (M16)	4
A-8	01000100H000	Hex. Bolt (M16*L60)	4
A-9	24029ET-A001	Main Power S/W	1
A-10	09600100B000	Main Power S/W Bracket	1
A-11	02038SC-9131	Plus Screw (M5*L10)	2
A-12	09000600B000	ON/OFF S/W BOX COVER	1
A-13	02044SC-3123	Truss Screw (M5*L8)	4
A-14	02032CW-H001	Body Support Stand Ass'Y	4
A-15	CA-000290-01	MAIN POWER PLUG TO NFB INPUT	1
A-16	02097ET-B001	Model Name Plate	1
A-17	12001100I000	BEAM SIDE COVER	2
A-18	12000610F000	Body Cover (B)	1
A-19	GP-045716-00	Body Cover (C)	2
A-20	GP-045715-01	Body Cover (D)	1
A-21	12000100H000	Rubber For Body Support	4
A-22	02010SC-3123	Truss Screw (M4*L8)	4
A-23	02001DC-A001	Brand Mark	1
A-24	02002SC-7119	Pluss Screw (M4*L8)	4
A-25	02044SC-3123	Truss Screw (M5*L8)	12
A-26	AS-006967-00	Beam & Body	1
A-27	24032ET-A001	Power Plug(3P)	1
A-28	02335RB-A001	Body Level Base Rubber (New)	4
A-29	02324RB-A001	Body Support Stand Rubber	4
A-30	09000400B000	Guide Bush (A)	1
A-31	GP-009902-00	Emergency Switch Holder(A) [L=268]	1
A-32	09000500B000	Emergency Switch Plate	1
A-33	-	Emergency Switch Sticker	1
A-34	02023SC-7113	Truss Screw (M4*L8)	1
A-35	08091SC-7113	Hex. Socket Bolt (M6*L20)	4
A-36	03026SW-9115	Spring Washer (@6)	4
A-37	08057SW-1111	Washer (@6)	4
A-38	04014SC-4517	Hex. Socket Set Screw (M5*L6)	4
A-39	02025PR-A001	Bobbin Stand Bracket	1
A-40	02026SC-A001	Bobbin Stand	2

Ref. No	Part No.	Part Names	Q'ty
A-41	02031SC-7113	Hex. Socket Bolt (M5*L10)	2
A-42	18049SW-3111	Washer (@5)	2
A-43	02029SN-9311	Hex. Nut (M4)	2
A-44	02028SW-9115	Spring Washer (@4)	2
A-45	06003SW-2111	Washer (@4)	2
A-46	BD-000168-01	SURGE PROTECTOR	1
A-47	05000210T000	TRANSFORMER (EMT25V) 1A/25.5V	1
A-48	02000910T000	MAGNETIC S/W FIXED BRACKET	1
A-49	02001300T000	BRACKET STOPPER (CE)	2
A-50	02000100T000	MAGNETIC SWITCH SET	1
A-51	09001400BT00	CEMENT RESISTANCE (4.7/20W)	2

A1 Machine Body Ass'y (Y-Stroke 1200 Above)

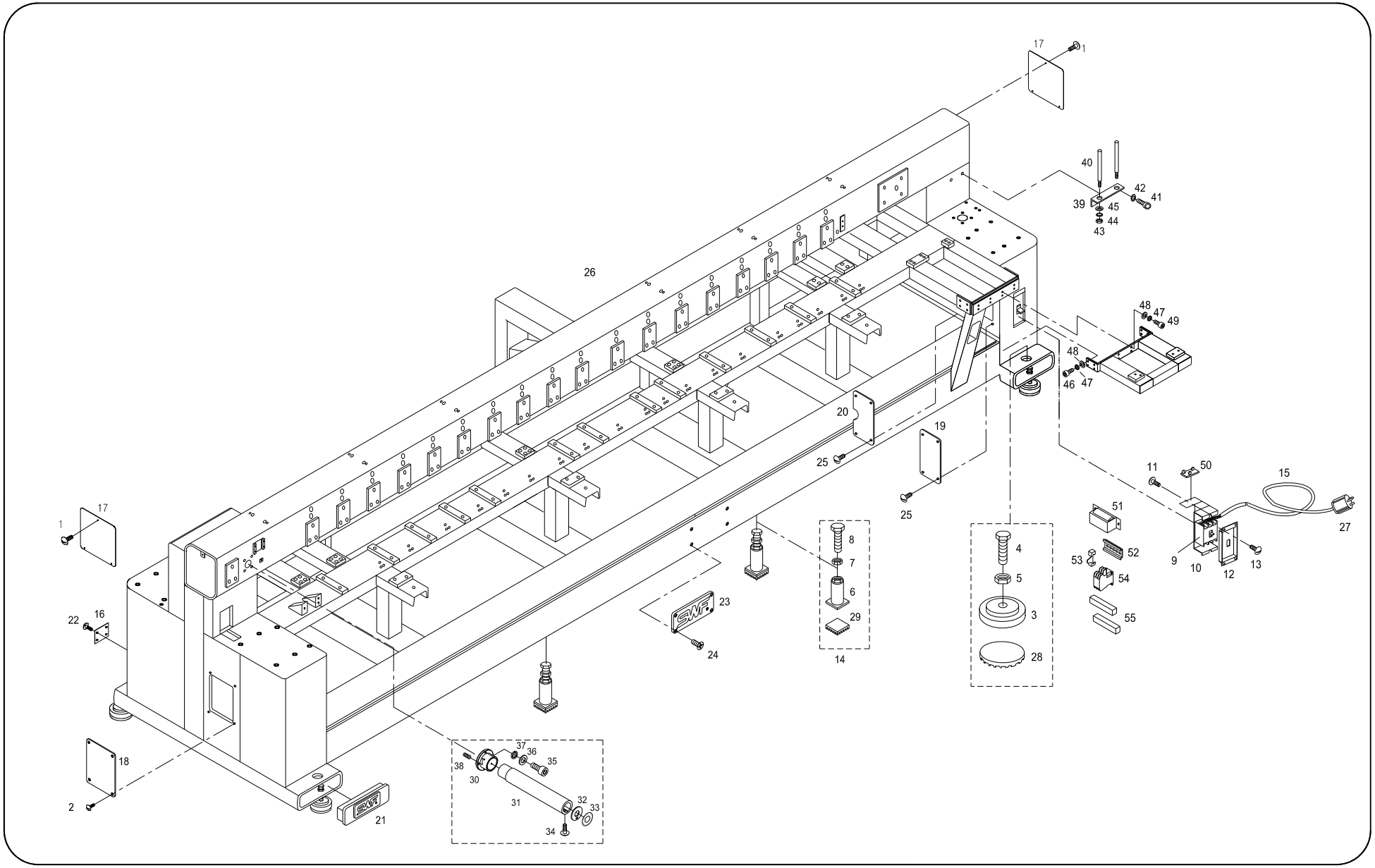

Ref.No	Part No.	Part Names	Q'ty
A1-1	02044SC-3123	Truss Screw (M5*L8)	6
A1-2	02044SC-3123	Truss Screw (M5*L8)	4
A1-3	02330CW-A001	Leveling Base	4
A1-4	02035SC-A001	Hex. Bolt (M20*L90)	4
A1-5	02036SN-1211	Hex. Nut (M20-No2)	4
A1-6	02322CW-A001	Body Support Stand Pipe (1")	4
A1-7	02321SN-A001	Hex. Nut (M16)	4
A1-8	01000100H000	Hex. Bolt (M16*L60)	4
A1-9	24029ET-A001	Main Power S/W	1
A1-10	09600100B000	Main Power S/W Bracket	1
A1-11	02038SC-9131	Plus Screw (M5*L10)	2
A1-12	09000600B000	ON/OFF S/W BOX COVER	1
A1-13	02044SC-3123	Truss Screw (M5*L8)	4
A1-14	02032CW-H001	Body Support Stand Ass'Y	4
A1-15	CA-000290-01	MAIN POWER PLUG TO NFB INPUT	1
A1-16	02097ET-B001	Model Name Plate	1
A1-17	12001100I000	BEAM SIDE COVER	2
A1-18	12000610F000	Body Cover (B)	1
A1-19	GP-045716-00	Body Cover (C)	2
A1-20	GP-045715-01	Body Cover (D)	1
A1-21	12000100H000	Rubber For Body Support	4
A1-22	02010SC-3123	Truss Screw (M4*L8)	4
A1-23	02001DC-A001	Brand Mark	1
A1-24	02002SC-7119	Pluss Screw (M4*L8)	4
A1-25	02044SC-3123	Truss Screw (M5*L8)	12
A1-26	AS-007793-00	Beam & Body	1
A1-27	24032ET-A001	Power Plug(3P)	1
A1-28	02335RB-A001	Body Level Base Rubber (New)	4
A1-29	02324RB-A001	Body Support Stand Rubber	4
A1-30	09000400B000	Guide Bush (A)	1
A1-31	GP-009902-00	Emergency Switch Holder(A) [L=268]	1
A1-32	09000500B000	Emergency Switch Plate	1
A1-33	-	Emergency Switch Sticker	1
A1-34	02023SC-7113	Truss Screw (M4*L8)	1
A1-35	08091SC-7113	Hex. Socket Bolt (M6*L20)	4
A1-36	03026SW-9115	Spring Washer (@6)	4
A1-37	08057SW-1111	Washer (@6)	4
A1-38	04014SC-4517	Hex. Socket Set Screw (M5*L6)	4
A1-39	02025PR-A001	Bobbin Stand Bracket	1
A1-40	02026SC-A001	Bobbin Stand	2

Ref. No	Part No.	Part Names	Q'ty
A1-41	02031SC-7113	Hex. Socket Bolt (M5*L10)	2
A1-42	18049SW-3111	Washer (@5)	2
A1-43	02029SN-9311	Hex. Nut (M4)	2
A1-44	02028SW-9115	Spring Washer (@4)	2
A1-45	06003SW-2111	Washer (@4)	2
A1-46	01006SC-4113	Hex. Socket Bolt (M10*L50)	8
A1-47	01008SW-9115	Spring Washer (@10)	16
A1-48	01007SW-1111	Washer (@10)	16
A1-49	14068SC-4113	Hex. Socket Bolt (M10*L35)	8
A1-50	BD-000168-01	SURGE PROTECTOR	1
A1-51	05000210T000	TRANSFORMER (EMT25V) 1A/25.5V	1
A1-52	02000910T000	MAGNETIC S/W FIXED BRACKET	1
A1-53	02001300T000	BRACKET STOPPER (CE)	2
A1-54	02000100T000	MAGNETIC SWITCH SET	1
A1-55	09001400BT00	CEMENT RESISTANCE (4.7/20W)	2

B

Work Table(Y-Stroke 1000 Below)

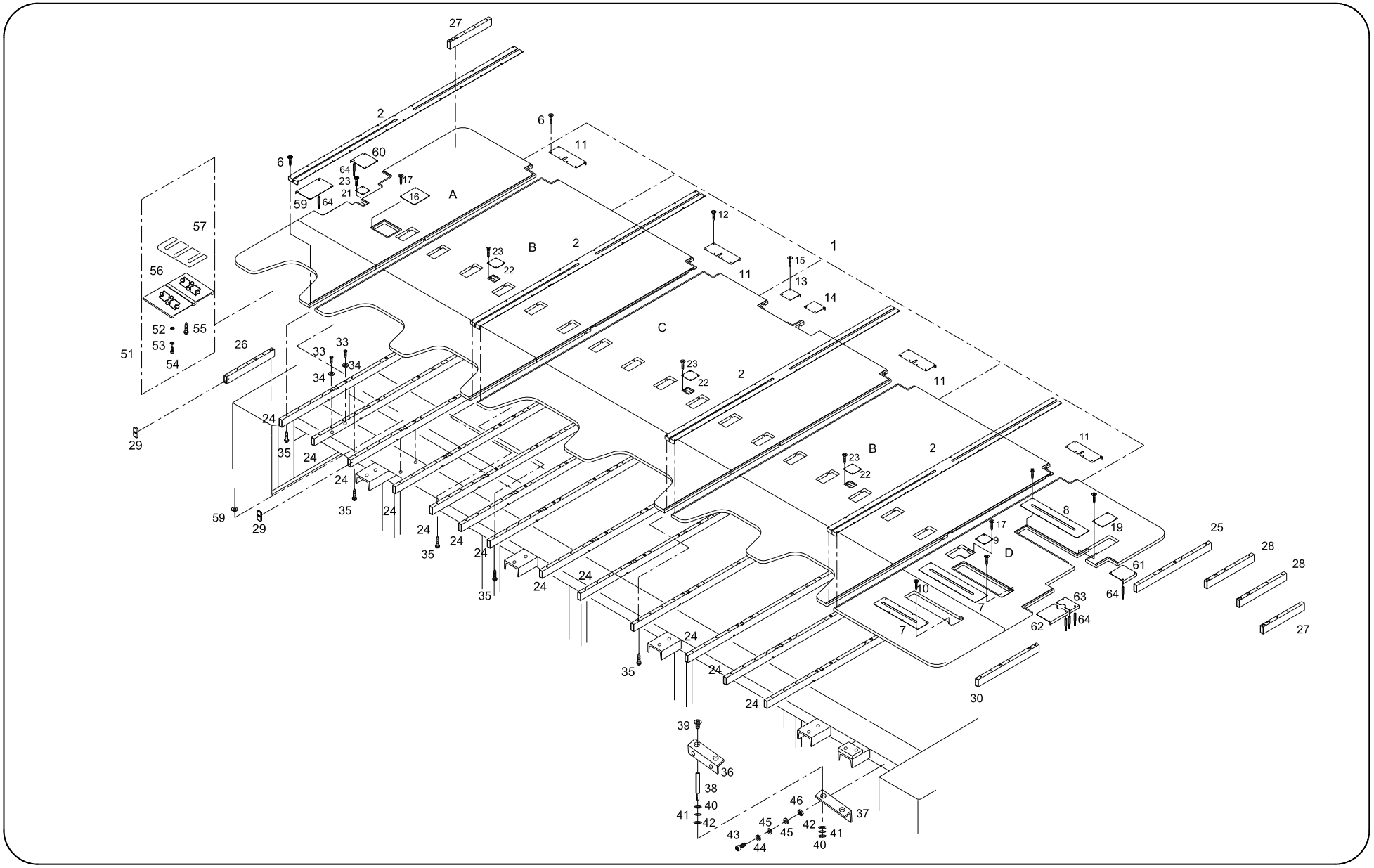

Ref.No	Part No.	Part Names	Q'ty
B-1	AS-017360-00	Table(Set)	1
B-2	CP-007658-00	TABLE CONNECTING COVER	4
B-6	PSC-DC0003-00	Tapping Screw (M3*L16)	156
B-7	CP-007794-00	L.M Guide Cover A	2
B-8	GP-046302-00	L.M Guide Cover B	1
B-9	12000600BK00	Encoder Cover	1
B-10	08101SC-8329	Tapping Screw (M3*L16)	26
B-11	16035LA-D001	Coupling Cover "B"	4
B-12	08101SC-8329	Tapping Screw (M3*L16)	16
B-13	GP-046720-01	Coupling Cover (C1-L)	1
B-14	GP-046721-01	Coupling Cover (C1-R)	1
B-15	08101SC-8329	Tapping Screw (M3*L16)	6
B-16	08088PR-B001	Mes Driving Box Cover	1
B-17	08101SC-8329	Tapping Screw (M3*L16)	8
B-19	08000220B000	X-Motor Coupling Cover(B)	1
B-20	08101SC-8329	Tapping Screw (M3*L16)	8
B-21	08001310H000	Low Shaft Coupling Cover A	1
B-22	08001410H000	Low Shaft Coupling Cover B	3
B-23	08101SC-8329	Tapping Screw (@3*L16)	16
B-24	16005CW-A021	Table Support(A)(L=1400)	18
B-25	CP-228159-00	Table Support(B)(L=740)	1
B-26	GP-018527-00	Table Support(C)(L=450)	1
B-27	GP-018526-00	Table Support(D)(L=490)	2
B-28	GP-018528-00	Table Support(E)(L=349)	2
B-29	GP-011803-00	TABLE SUPPORT END CAP	27
B-30	01000300B004	TABLE SUPPORT ANGLE "K"	1
B-33	16009SC-4113	Hex. Socket Screw (M10*L25)	110
B-34	01008SW-9115	Spring Washer (@10)	110
B-35	02087SC-4329	Tapping Screw (@5*L25)	305
B-36	16013CW-A001	Table Support(E)(L=320)	1
B-37	16014CW-A001	Table Support Bracket "A"	1
B-38	16021CW-A001	Stud Bolt	2
B-39	06020MC-8119	PLUSS SCREW (M6*L20)	2
B-40	04032SN-A001	Hex. Nut (M8)	4
B-41	15095SW-3115	Spring Washer (@8)	2
B-42	04029SW-A001	Stud Bolt Washer (@8)	4
B-43	08091SC-7113	Hex. Socket Bolt (M6*L20)	2
B-44	16014SW-4115	Spring Washer (@6)	2
B-45	08057SW-1111	Washer (@6)	4
B-46	13042SN-1111	Hex. Nut (M6*T5-R)	2
B-51	16043BM-A021	Table Connecting Plate (Set)	20

Ref. No	Part No.	Part Names	Q'ty
B-52	18049SW-3111	Washer (@5)	160
B-53	18048SW-3115	Spring Washer (@5)	160
B-54	02031SC-7113	Hex. Socket Screw(M5*L10)	160
B-55	16010SC-8330	Tapping Screw (M6*L25)	160
B-56	06001100B000	TABLE CONNECTING PLATE "C"	24
B-57	06001200B000	TABLE SPACE PLATE "C"	48
B-58	16014SW-4115	Spring Washer (@8)	109
B-59	GP-046698-00	Beam & Body Support Cover A	1
B-60	GP-046247-00	Beam & Body Support Cover B	1
B-61	GP-046246-00	Beam & Body Support Cover B-1	1
B-62	GP-046699-00	Beam & Body Support Cover C	1
B-63	GP-046700-00	Beam & Body Support Cover C-1	1
B-64	SC-001704-00	Beam & Body Support Cover Stud Bolt	6

B1 Work Table(Y-Stroke 1200 Above)

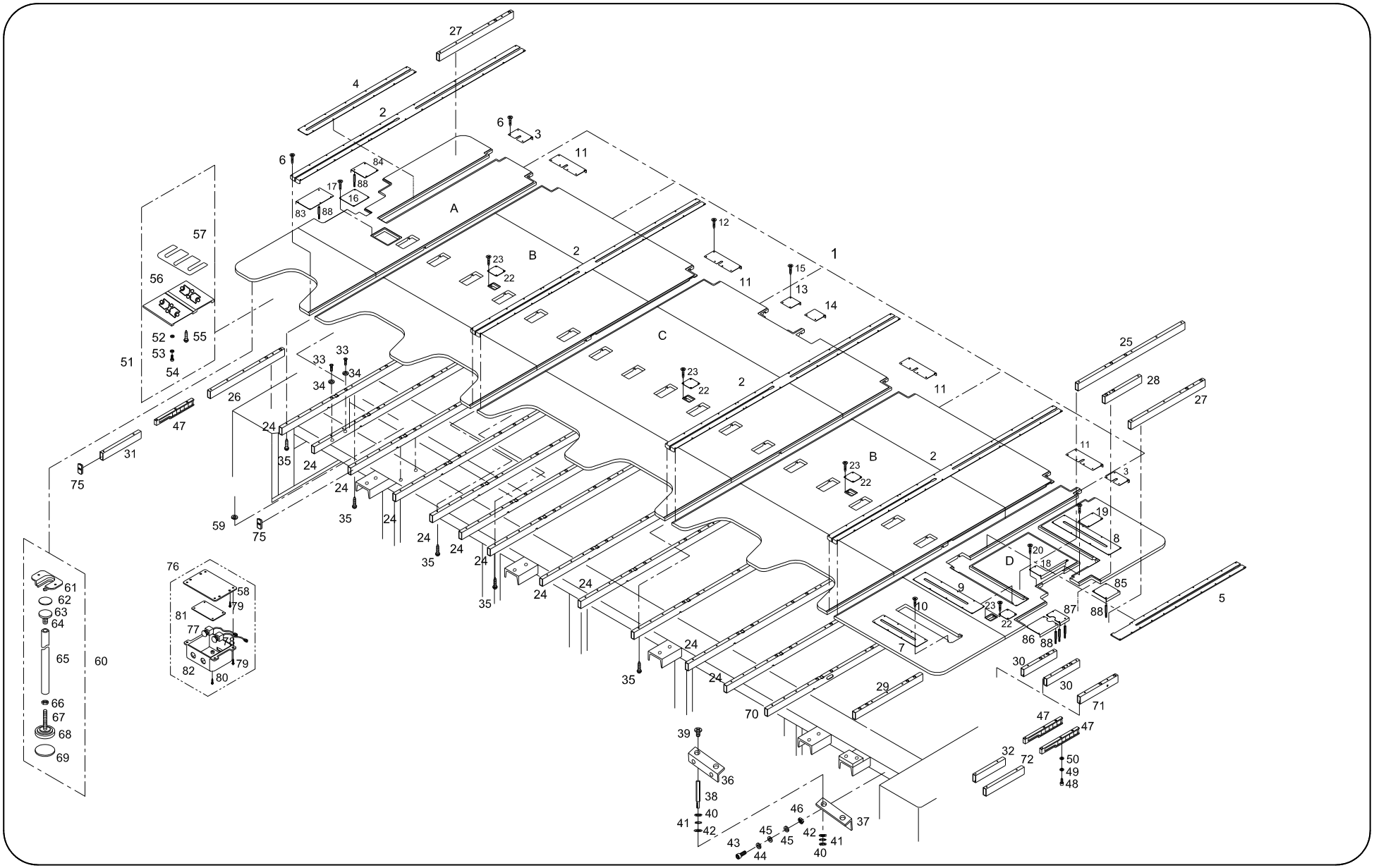

Ref.No	Part No.	Part Names	Q'ty
B1-1	AS-008601-00	Table(Set)	1
B1-2	CP-007658-00	TABLE CONNECTING COVER	4
B1-3	17030LA-E121	Table Connecting Cover(B)	2
B1-4	GP-004228-00	TABLE CONNECTING COVER	1
B1-5	08000600B009	Table Connecting Cover(D)	1
B1-6	08101SC-8329	Tapping Screw (M3*L16)	152
B1-7	16029LA-A122	L.M Guide Cover A (L=707)	1
B1-8	10000300BHI0	L.M Guide Cover B(L=730)	1
B1-9	10000400BHI0	L.M Guide Cover C (L=701)	1
B1-10	08101SC-8329	Tapping Screw (M3*L16)	26
B1-11	16035LA-0001	Coupling Cover "B"	4
B1-12	08101SC-8329	Tapping Screw (M3*L16)	16
B1-13	GP-046720-01	Coupling Cover (C1-L)	1
B1-14	GP-046721-01	Coupling Cover (C1-R)	1
B1-15	08101SC-8329	Tapping Screw (M3*L16)	6
B1-16	08088PR-B001	Mes Driving Box Cover	1
B1-17	08101SC-8329	Tapping Screw (M3*L16)	4
B1-18	04001500B009	X-Motor Coupling Cover(A)	1
B1-19	04001600B009	X-Motor Coupling Cover(B)	1
B1-20	08101SC-8329	Tapping Screw (M3*L16)	8
B1-22	08001410H000	Low Shaft Coupling Cover B	4
B1-23	08101SC-8329	Tapping Screw (@3*L16)	20
B1-24	06000100B009	Table Support(A)(L=1754)	18
B1-25	06000200B009	Table Support(B)(L=1051)	2
B1-26	06000300B009	Table Support(C)(L=371.5)	1
B1-27	06000400B009	Table Support(D)(L=730)	2
B1-28	06000500B009	Table Support(E)(L=360)	3
B1-29	06000600B009	Table Support(F)(L=664)	2
B1-30	06000700B009	Table Support(G)(L=325)	3
B1-31	06000800B009	Table Support(H)(L=376)	20
B1-32	06000900B009	Table Support(I)(L=293)	3
B1-33	16009SC-4113	Hex. Socket Screw (M10*L25)	110
B1-34	01008SW-9115	Spring Washer (@10)	110
B1-35	02087SC-4329	Tapping Screw (@5*L25)	305
B1-36	16013CW-A001	Table Support(E)(L=320)	1
B1-37	16014CW-A001	Table Support Bracket "A"	1
B1-38	16021CW-A001	Stud Bolt	2
B1-39	06020MC-8119	PLUSS SCREW (M6*L20)	2
B1-40	04032SN-A001	Hex. Nut (M8)	4
B1-41	15095SW-3115	Spring Washer (@8)	2
B1-42	04029SW-A001	Stud Bolt Washer (@8)	4
B1-43	08091SC-7113	Hex. Socket Bolt (M6*L20)	2

Ref. No	Part No.	Part Names	Q'ty
B1-44	16014SW-4115	Spring Washer (@6)	2
B1-45	08057SW-1111	Washer (@6)	2
B1-46	13042SN-1111	Hex. Nut (M6*T5-R)	2
B1-47	GP-010089-00	Table Support Connecting Bar B	23
B1-48	16009SC-4113	Hex. Socket Bolt	92
B1-49	16014SW-4115	Spring Washer (@6)	92
B1-50	08057SW-1111	Washer (@6)	92
B1-51	16043BM-A021	Table Connecting Plate (Set)	20
B1-52	18049SW-3111	Washer (@5)	160
B1-53	18048SW-3115	Spring Washer (@5)	160
B1-54	02031SC-7113	Hex. Socket Screw(M5*L10)	160
B1-55	16010SC-8330	Tapping Screw (M6*L25)	160
B1-56	06001100B000	TABLE CONNECTING PLATE "C"	24
B1-57	06001200B000	TABLE SPACE PLATE "C"	48
B1-58	GP-012131-00	FIXING PLATE FOR OFFSET S/W BOX	1
B1-59	16014SW-4115	Spring Washer (@8)	109
B1-60	16047BM-A021	TABLE SUPPORT BASE SET (L)	10
	12000200B009	TABLE SUPPORT BAR B	2
B1-61	12010000B009	TABLE SUPPORT BAR BRACKET	1
B1-62	16048RB-A021	TABLE SUPPORT PLATE RUBBER	1
B1-63	16047PR-A021	TABLE SUPPORT PLATE	1
B1-64	16049CW-A021	TABLE SUPPORT PLATE PIN	1
B1-65	16050CW-A021	TABLE SUPPORT BAR	1
	12000200B009	TABLE SUPPORT BAR B	1
B1-66	02321SN-A001	HEX. NUT (M16)	2
B1-67	02325SC-A021	HEX. BOLT (M16*L150)	1
B1-68	02331CW-A001	TABLE SUPPORT BASE SET	1
B1-69	02332RB-A001	TABLE SUPPORT RUBBER(B)	1
B1-70	01111100B009	TABLE SUPPORT ANGLE "A-1"	1
B1-71	06000200BTZI	TABLE SUPPORT ANGLE "C-1"	1
B1-72	06000900BUYK	TABLE SUPPORT ANGLE "K"	1
B1-73	06000120B000	TABLE INSERT NUT	152
B1-74	SC-000236-00	SCREW M4*L10	152
B1-75	GP-003757-00	TABLE SUPPORT END CAP	36
B1-76	SWF-00000344	OFFSET SWITCH BOX ASS'Y	4
B1-77	02026EL-UK01	START S/W	1
B1-78	02027EL-UK01	STOP S/W	1
B1-79	09005SC-3123	SCREW(M3*L6)	8
B1-80	22015SC-9134	SCREW(M3*L6)	5
B1-81	BD-000177-00	OFFSET S/W BOARD	1
B1-82	GP-012130-00	OFFSET S/W BOX	1
B1-83	GP-045718-00	Beam & Body Support Cover A	1

B1 Work Table(Y-Stroke 1200 Above)

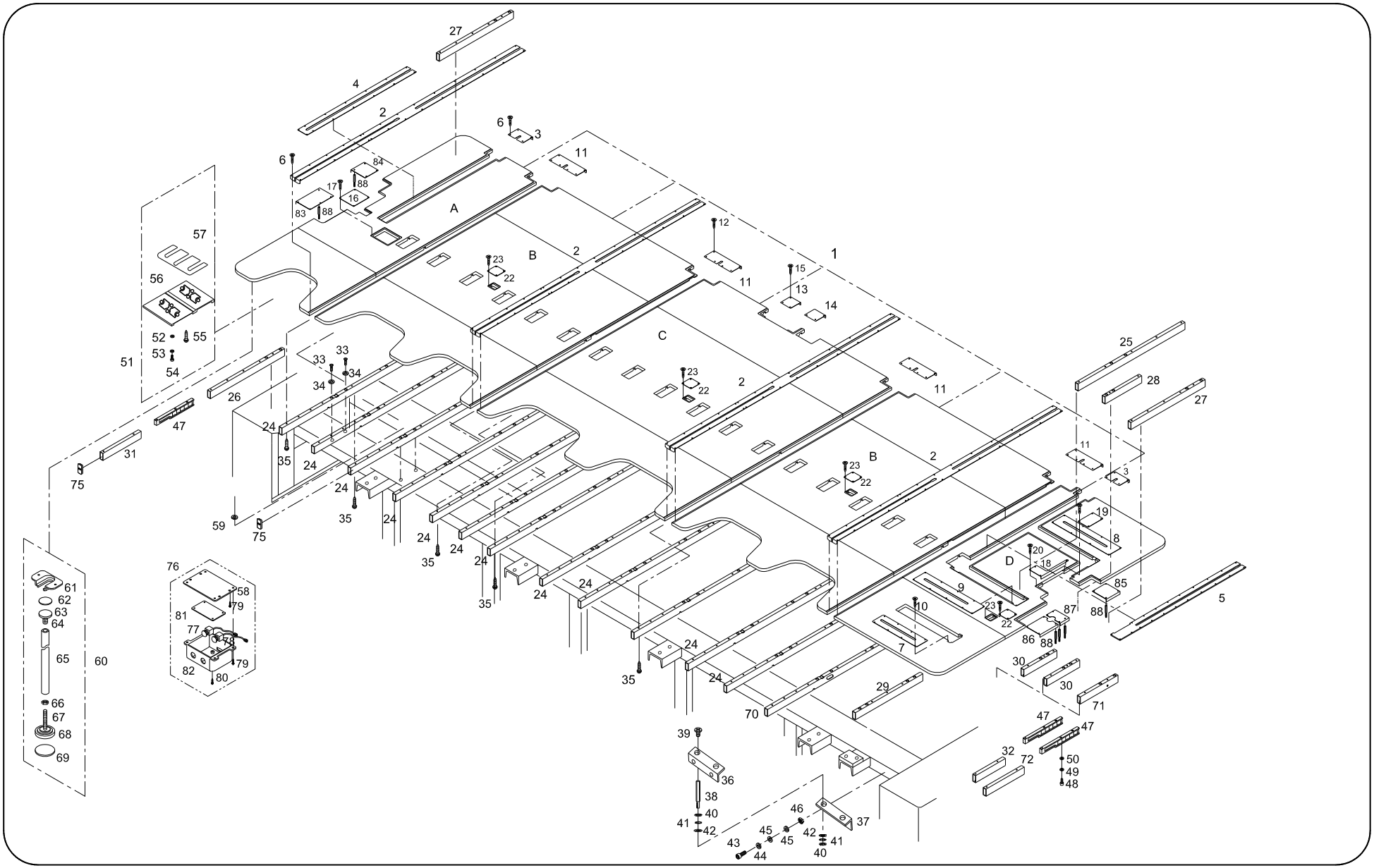

Ref.No	Part No.	Part Names	Q'ty
B-84	GP-046247-00	Beam & Body Support Cover B	1
B-85	GP-046246-00	Beam & Body Support Cover B-1	1
B-86	GP-046699-00	Beam & Body Support Cover C	1
B-87	GP-046700-00	Beam & Body Support Cover C-1	1
B-88	SC-001704-00	Beam & Body Support Cover Stud Bolt	6

Ref. No	Part No.	Part Names	Q'ty

C

Thread Stand

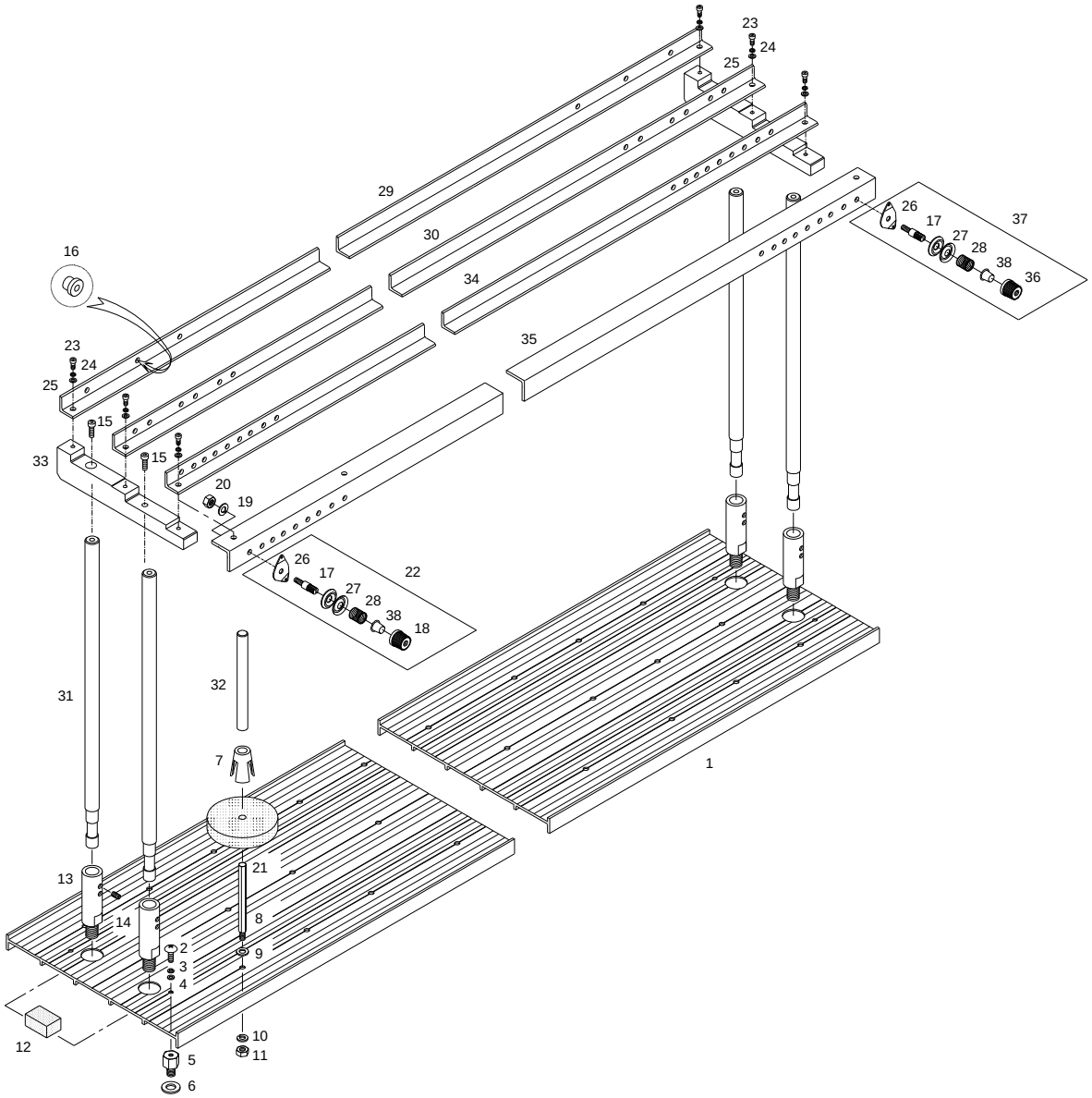

SWF/GE-Series

Ref.No	Part No.	Part Names	Q'ty
C-1	12001AD-A021	Spool Plate	1
C-2	02010SC-3123	TRUSS SCREW (M4*L8)	20
C-3	02028SW-9115	Spring Washer (@4)	20
C-4	10000200B000	Spool Plate Washer	20
C-5	12013SC-A001	Spool Plate Fixing Bolt(M8*L22)	20
C-6	15077SW-2111	Washer (@8)	20
C-7	12012PM-A001	Spool Holder	162
C-8	12009SC-A001	Spool Post	162
C-9	18049SW-3111	Washer (@5)	162
C-10	18048SW-3115	Spring Washer (@5)	162
C-11	12010SN-1211	Hex.Nut (M5-No2)	162
C-12	12049SF-A001	Felt	12
C-13	12014SC-A001	Spool Stand Bolt	20
C-14	04014SC-4517	Hex.Socket Set Screw(M5*L5)	40
C-15	03016SC-4113	Hex. Socket Bolt (M5*L15)	40
C-16	12042PM-A001	Eyelet	324
C-17	08301000A000	TENSION ADJUSTING STUD	162
C-18	08300600A000	SUB TENSION ADJUSTING NUT(A)	144
C-19	18048SW-3115	Spring Washer (@5)	162
C-20	03031SN-A001	Pin. Nut (11/64,N=40)	162
C-21	12052SF-A001	Spool Sponge	162
C-22	10600110B000	SUB TENSION ADJUSTING SET(NEW)	144
C-23	07016SC-7113	Hex. Socket Bolt (M4*L12)	30
C-24	02028SW-9115	Spring Washer (@4)	30
C-25	06003SW-2111	Washer (@4)	30
C-26	11152PR-A001	Tension Plate	162
C-27	11153PR-B001	Tension Disc (New)	324
C-28	08301100A000	TENSION SPRING	162
C-29	12019AD-A021	Angle "A"	1
C-30	12020AD-A021	Angle "B"	1
C-31	01001500B000	Spool Stand (L=280)	20
C-32	10000100A000	Thread Guide (L=200)	36
C-33	10600100H000	Angle Frame	10
C-34	10600403BHI0	Angle "C"	1
C-35	10600513BHI0	Angle "D"	1
C-36	10600610A000	SUB TENSION ADJUSTING NUT B	18
C-37	10600210B000	SUB TENSION ADJUSTING SET	18
C-38	11088PM-A001	TENSION SPRING STOPPER	162

Ref. No	Part No.	Part Names	Q'ty

D

Main Drive System

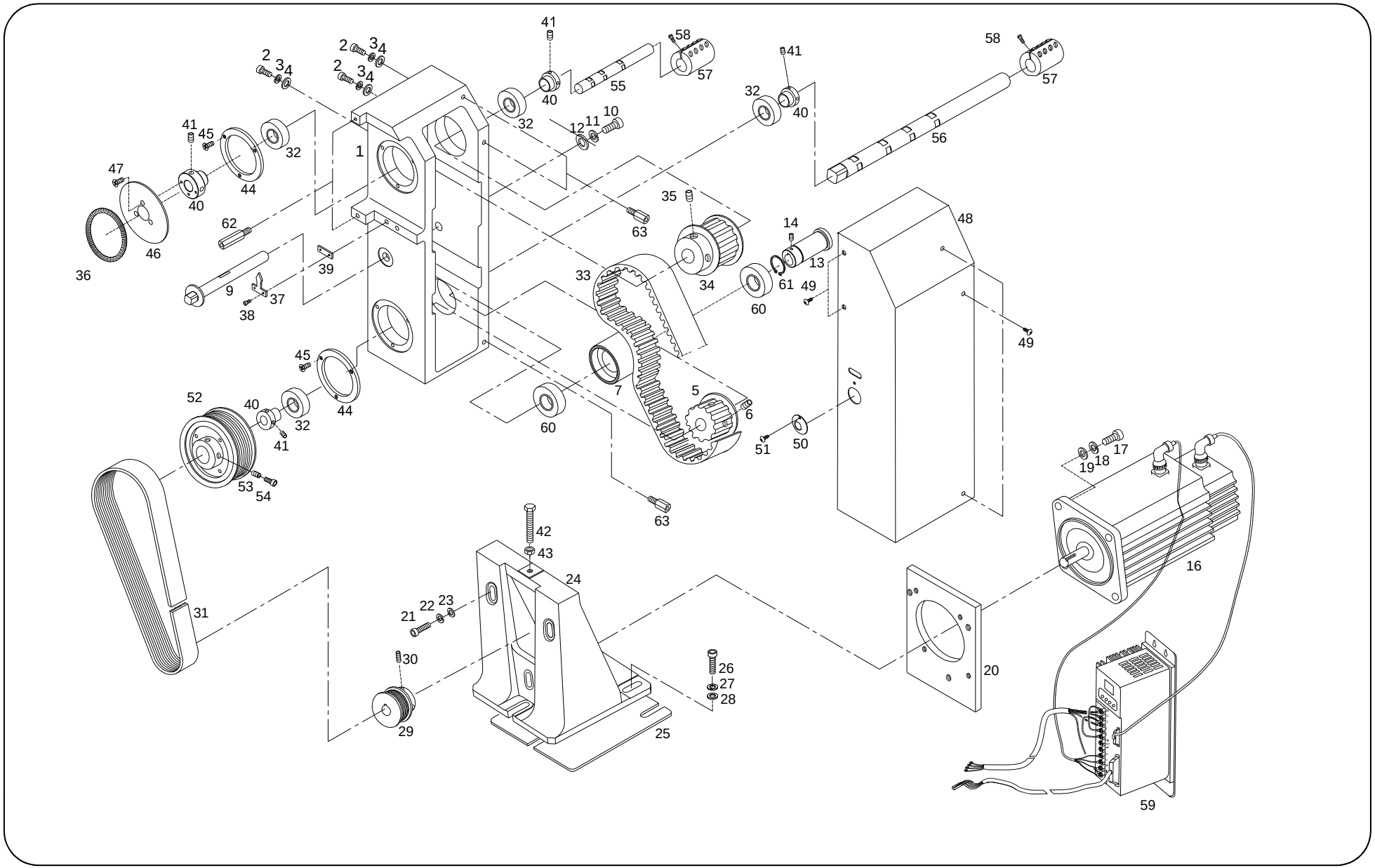

Ref.No	Part No.	Part Names	Q'ty
D-001	CP-007401-03	Main Driving Pulley Box	1
D-002	03003SC-4113	Hex.Socket Bolt(M8 x L35)	9
D-003	15095SW-3115	Spring Washer(@8)	9
D-004	08041SW-1111	Washer(@8)	9
D-005	GP-014275-00	Low Shaft Timing Pulley(36S5M040AF)	1
D-006	14061AF-4517	Hex.Socket Set Screw(M8 x L8)	2
D-007	03200300I000	Tension Control Roller	1
D-009	03200500B000	Idler Shaft	1
D-010	14006SC-7113	Hex.Socket Bolt(M8 x L12)	1
D-011	15095SW-3115	Spring Washer(@10)	1
D-012	04029SW-A001	Washer(@10)	1
D-013	03200600B000	Idler Bush	1
D-014	04004MC-4517	Fixed Bolt(M4x L4)	1
D-016	DMP1-000003	MAIN MOTOR	1
D-017	14027SC-4113	Hex.Socket Bolt(M8 x L20)	4
D-018	15095SW-3115	Spring Washer(@8)	4
D-019	04029SW-A001	Washer(@8)	4
D-020	14026CW-A001	Bracket	1
D-021	03002SC-4113	Hex.Socket Bolt(M8 x L32)	3
D-022	15095SW-3115	Spring Washer(@8)	3
D-023	08041SW-1111	Washer(@8)	3
D-024	14024CS-A001	Main Motor Bracket	1
D-025	GP-005328-00	MAIN MOTOR BRACKET RUBBER	1
D-026	14068SC-4113	Hex.Socket Bolt(M10 x L35)	3
D-027	01008SW-9115	Spring Washer(@10)	3
D-028	01007SW-A001	Washer(@10)	3
D-029	03100410H000	Main Motor Pulley	1
D-030	14014SC-7113	Hex.Socket Set Screw(M5x L5)	3
D-031	BE-000328-00	Main Driving velt	1
D-032	01029BR-A001	Ball Bearing(6004ZZ)	4
D-033	BE-000142-00	Timing Belt[40C-S5M-600-F]	1
D-034	GP-014275-00	Top Shaft Timing Pulley(36S5M040BF)	1
D-035	14061AF-4517	Hex.Socket Set Screw(M8x L8)	4
D-036	03005600H000	Angle Disk	1
D-037	GP-008410-00	Indicator	1
D-038	02023SC-7113	Hex.Socket Bolt(M4 x L8)	2
D-039	CP-007861-00	Indicator block 33*12*4t	1
D-040	14058CW-A001	Collar"A"	4
D-041	06060MC-4517	Hex.Socket Set Screw(M6x L6)	188
D-042	14063SC-A001	Tension Control Bolt	1

Ref. No	Part No.	Part Names	Q'ty
D-043	14064SN-7311	Hex.Nut(M6)	1
D-044	12101100I000	Top Shaft Bearing Housing	4
D-045	08091SC-7113	Hex.Socket Bolt	12
D-046	GP-005807-00	Angle Disk Base	4
D-047	21002SC-8119	Plus Screw (M3-L8)	4
D-048	CP-007402-00	Pulley Box Cover A	1
D-049	02044SC-3123	Truss Screw(M5 x L8)	10
D-050	02054PR-A001	Main Motor Pulley Cover	1
D-051	02044SC-3123	Truss Screw(M5 x L8)	1
D-052	GP-005650-01	PULLEY FOR GEAR SHAFT	1
D-053	14061AF-4517	Hex.Socket Set Screw(M8 x L8)	2
D-054	14006SC-7113	Hex.Socket Bolt(M8 x L15)	2
D-055	CP-007439-00	Top Shaft (A)	1
	03000110BJF0	Top Shaft (B)	1
	17019SH-AD00	Top Shaft (C)	1
	19019SH-AD00	Top Shaft (D)	1
	03000100B009	Top Shaft (E)	1
D-056	CP-007440-00	Low Shaft (A)	1
	03000200BEIO	Low Shaft (B)	1
	03000200B009	Low Shaft (C)	1
	17019SH-AD00	Low Shaft (D)	1
	03000300B009	Low Shaft (E)	1
D-057	03003810B000	Coupling	8
D-058	08062SC-7113	Hex.Socket Bolt(M5 x L20)	32
D-059	AMF1A-000001	MAIN MOTOR DRIVER (FA-AMP A Type)	1
D-060	03200400I000	ROLLER Bearing (6804ZZKYK)	2
D-061	03200700I000	C-RING Ø20	1
D-062	CP-007403-00	Main Driving Pulley Box Stud A	2
D-063	CP-007454-00	Main Driving Pulley Box Stud B	3

E

Rotary Hook Base

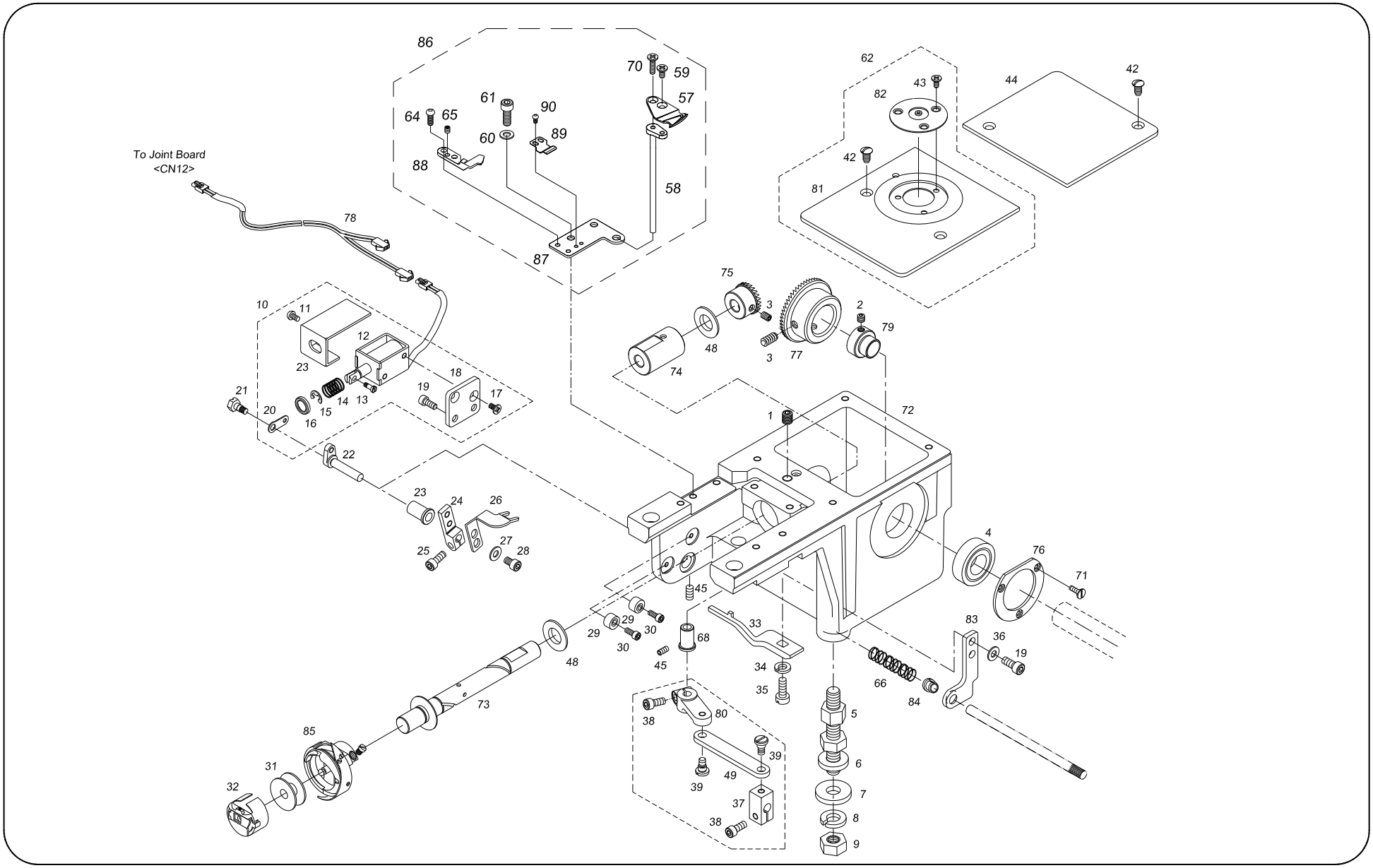

SWF/GE-Series

Ref.No	Part No.	Part Names	Q'ty
E-001	04012AF-A001	Hook Shaft Bush Screw (15/64-28)	18
E-002	04016AF-A001	Cam Collar Screw	108
E-003	06060MC-4517	Hex. Socket Set Screw (M6*L6)	72
E-004	PBR-AA004100	Ball Bearing 6003zz	18
E-005	04028SC-A001	Stud Bolt(M10*L69)	54
E-006	04029SW-A001	Stud Bolt Washer (@8)	54
E-007	04030SW-A001	Stud Bolt Washer (L) (@8)	54
E-008	15095SW-3115	Spring Washer (@8)	54
E-009	04032SN-A001	Hex. Nut (M8)	108
E-010	10009EL-A001	Picker Sol. Set	18
E-011	06010AF-8118	Plus Screw (M3*L4)	36
E-012	10013PM-A001	Picker Sol. Cover	18
E-013	10021SC-A001	Sol. Stud Screw	18
E-014	10011SP-A001	Sol. Spring	18
E-015	13044SR-4013	E-Ring (@4)	18
E-016	10012RB-A001	Cushion Washer	18
E-017	10010SC-8119	Plus Screw (M3*L5)	36
E-018	10015PR-A001	Picker Sol. Base	18
E-019	02023SC-7113	Hex. Socket Bolt (M4*L8)	36
E-020	10019PR-A001	Connecting Link	18
E-021	08012CW-T121	Connecting Plate Stud Screw	18
E-022	10006FU-A001	Picker Connecting Crank	18
E-023	08015PM-A001	Bushing	18
E-024	10004CW-A001	Picker Holder	18
E-025	02023SC-7113	Hex. Socket Bolt (M4*L8)	18
E-026	10001AF-A001	Picker	18
E-027	06003SW-2111	Washer (@4)	36
E-028	02014SC-7113	Hex. Socket Bolt (M4*L5)	36
E-029	10017RB-A001	Picker Stopper	36
E-030	03071SC-7113	Hex. Socket Bolt (M3*L10)	36
E-031	04035AF-A001	Bobbin	18
E-032	04034AF-A002	Bobbin Case Set	18
E-033	GP-010609-00	Rotary Hook Support	18
E-034	18048SW-3115	Spring Washer (@5)	18
E-035	04037SC-A001	Picker Bracket Screw (11/64-40)	18
E-036	06003SW-2111	Washer (@4)	36
E-037	08023CW-A001	Mes Shaft Cramp	18
E-038	02015SC-7113	Hex. Socket Bolt (M4*L10)	36
E-039	08022SC-A001	Lever Stud	36
E-042	04004AF-A001	Needle Plate Screw	72

Ref. No	Part No.	Part Names	Q'ty
E-043	04007SC-A001	Cushion Cover Screw	54
E-044	04008PR-A001	Hook Base Cover	18
E-045	08113SC-A001	Collar Screw (11/64, L6)	36
E-048	02004BR-T121	Hook Shaft Space	36
E-049	08025PR-B001	Mes Connecting Lever	18
E-057	08013CL-B001	Movable Mes	18
E-058	08014FU-B001	Movable Mes Shaft (New)	18
E-059	08017SC-B001	Screw (M3*L5)	18
E-060	06003SW-2111	Washer (@4)	36
E-061	03057SC-A001	Head Rail Holder Screw (11/64,L10)	36
E-062	12000110B000	NEEDEL PLATE SET	18
E-064	08098SC-8118	Plus Screw (M3*L4.5)	18
E-065	03050SC-4517	Hex. Socket Set Screw (M3*L3)	36
E-066	08049SP-A001	Lever Return Spring	2
E-068	01101800B000	Mes Adjusting Bushing	18
E-070	08014SC-A001	Plus Screw (M3*L8)	18
E-071	15064SC-A001	C.S Screw (M3*L3.5)	54
E-072	GP-032699-02	Rotary Hook Base (Bevel)	17
E-073	ST-000053-00	Hook Shaft	18
E-074	01100310H000	Hook Shaft Bush	18
E-075	01101900U000	Hook Shaft Gear	18
E-076	01100400H000	Bearing Cover	18
E-077	01101700U000	Low Shaft Gear	18
E-078	02101600BDK0	Picker Sol. Connet From J/B	1
E-079	01102000B000	Bearing Bushing	18
E-080	08110FH-B001	Mes Driving Crank	18
E-081	GP-008997-00	Needle Plate	18
E-082	12000400B000	NEEDLE PLATE ATTACHMENT	18
E-083	04002200H000	Mes Shaft Bracket	18
E-084	CP-007344-00	Mes Shaft Bracket Bush	18
E-085	CP-007474-00	Rotary Hook Set	18
E-086	04400010B000	MES MOUNTING SET (NEW)	18
E-087	04400100B000	MES MOUNTING BASE	18
E-088	04400200B000	FIXED MES	18
E-089	04400310B000	UNDER THREAD PRESSER	18
E-090	02003MC-8118	UNDER THREAD PRESSER SCREW	36

F

Encoder Set

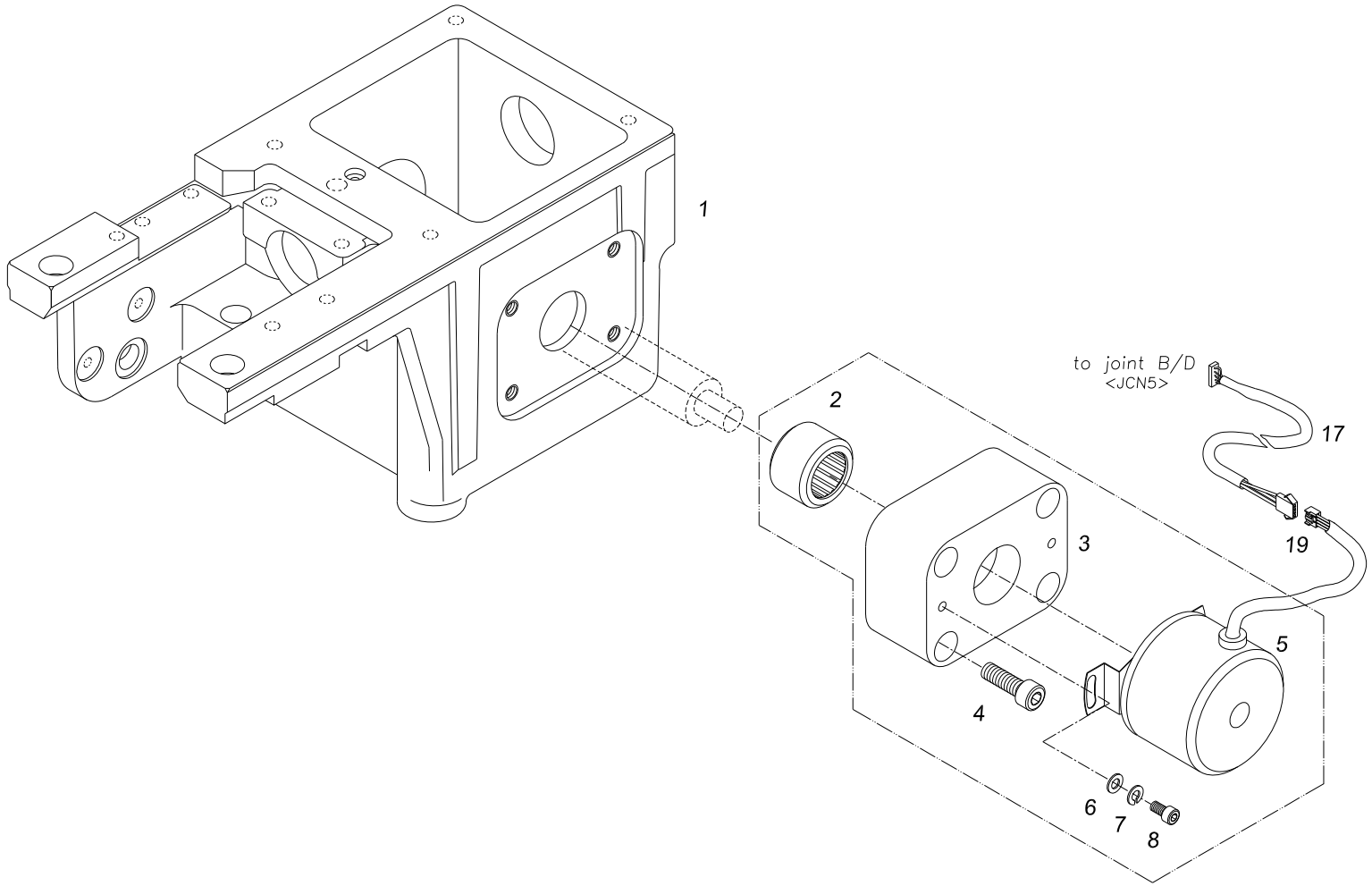

Ref.No	Part No.	Part Names	Q'ty
F-001	01200100B000	ROTARY HOOK BASE "B" (BEVEL)	1
F-002	04027BR-A001	Needle Bearing (Hmk1515)	1
F-003	21005CL-A001	Encoder Base	1
F-004	03016SC-4113	Hex. Socket Bolt (M5*L15)	4
F-005	03013EL-T121	ENCODER SET	1
F-006	06011SW-2111	Washer (@3)	2
F-007	08011SW-1111	Spring Washer (@3-S)	2
F-008	07035SC-7113	Bracket Screw (M3*L6)	2
F-017	25066EL-A001	Encoder Joint (25-66)	1
F-019	25103ET-B001	Encoder Connector	1

Ref. No	Part No.	Part Names	Q'ty

G Thread Cutting Drive System

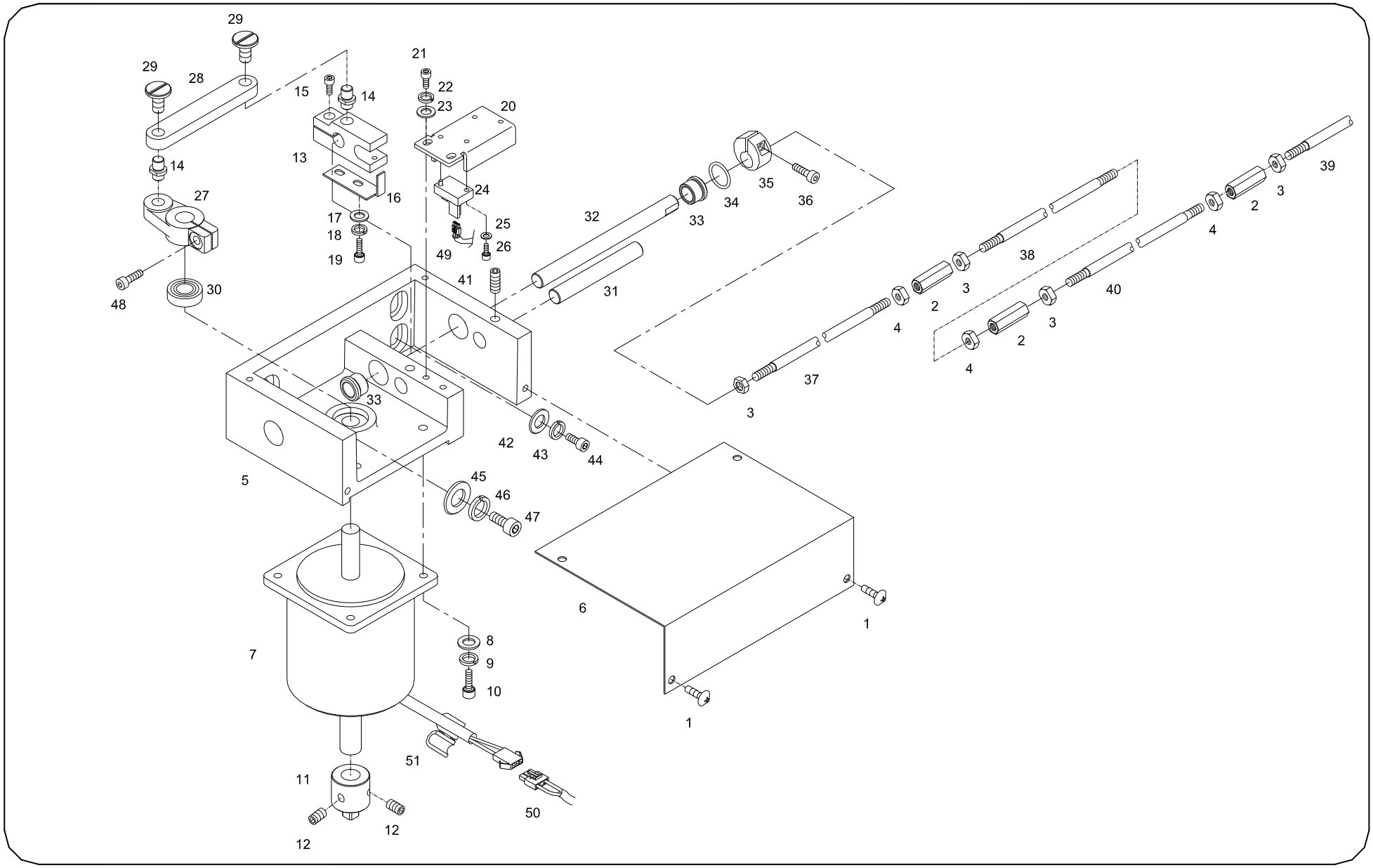

SWF/GE-Series

Ref.No	Part No.	Part Name	Q'ty
G-1	15042SC-3123	TRUSS SCREW (M4*L6)	6
G-2	17051SN-A001	Mes Driving Shaft Joint	3
G-3	13042SN-1111	Hex. Nut (M6*T5-R)	4
G-4	17053SN-1111	Hex. Nut (M6*T5-L)	3
G-5	GP-015257-00	MES CAM DRIVING BOX	1
G-6	04001000H000	Mes Driving Box Cover	1
G-7	16055MT-UK06	PULSE MOTOR (103H8223-5114) (28heads under)	1
	16059MT-E131	Y MOTOR (103H8222-5212) (28heads and over)	1
G-8	18049SW-3111	WASHER (@5)	4
G-9	18048SW-3115	SPRING WASHER (5@)	4
G-10	18047SC-7113	Hex. Socket Bolt (M5*L15)	4
G-11	03701200BT00	MOTOR DRIVING NOB	1
G-12	14060AF-4517	Hex.Socket Screw(M6*L6)	2
G-13	03700600H000	Mes Shaft Driving Clamp	1
G-14	03700300H000	Mes Link Pin	2
G-15	08062SC-7113	Hex. Socket Bolt (M5*L20)	1
G-16	GP-015265-01	Limit Sensor Plate	1
G-17	06011SW-2111	Washer (@3)	2
G-18	11019SW-9115	Spring Washer (@3)	2
G-19	07035SC-7113	BRACKET SCREW (M3*L6)	2
G-20	GP-015264-01	Limit Sensor Base	1
G-21	02015SC-7113	Hex. Socket Bolt (M4*L10)	2
G-22	18048SW-3115	SPRING WASHER (5@)	2
G-23	18049SW-3111	WASHER (@5)	2
G-24	BD-00396-01	Xy-Sensor Ass'Y (Tlp1204)	2
G-25	06011SW-2111	Washer (@3)	4
G-26	09007SC-7113	Hex. Socket Bolt (M3*L12)	4
G-27	04001100BT00	MES DRIVING CRANK	1
G-28	03700400H000	Mes Driving Link	1
G-29	03700500H000	Mes Driving Link Screw	2
G-30	03701000H000	Ball Bearing (6001Z)	1
G-31	03700800H000	Mes Driving Shaft Guide	1
G-32	03700700H000	Mes Driving Shaft (@10*L121)	1
G-33	03701100H000	Mes Driving Shaft Bush	2
G-34	08067RB-A001	O-Ring (@10)	1
G-35	08065CW-A001	Stopper Collar	1
G-36	18047SC-7113	Hex. Socket Bolt (M5*L15)	1
G-37	17032SH-AC01	Mes Driving Shaft "A"	1
G-38	17032SH-AC01	Mes Driving Shaft "B"	1
G-39	17029SH-AF01	Mes Driving Shaft "C"	1

Ref. No	Part No.	Part Name	Q'ty
G-40	04000200HHI0	Mes Driving Shaft "D"	1
G-41	14060AF-4517	Hex.Socket Screw(M6*L6)	1
G-42	03025SW-1211	Washer (@6)	2
G-43	03026SW-9115	Spring Washer (@6)	2
G-44	06025MC-7113	Hex. Socket Bolt (M6*L25)	2
G-45	04029SW-A001	Stud Bolt Washer (@8)	1
G-46	15095SW-3115	Spring Washer (@8)	1
G-47	14003SC-4113	Hex. Socket Bolt (M8*L25)	1
G-48	14002SC-7113	Hex.Socket Bolt (M6*L15)	1
G-49	02104500HD00	CAM FROM RETURN SENSOR	1
G-50	02104600HE00	STEP MOTOR DRIVE POWER	1
G-51	15045EL-UK01	Bid(Large)	1

H

Arm

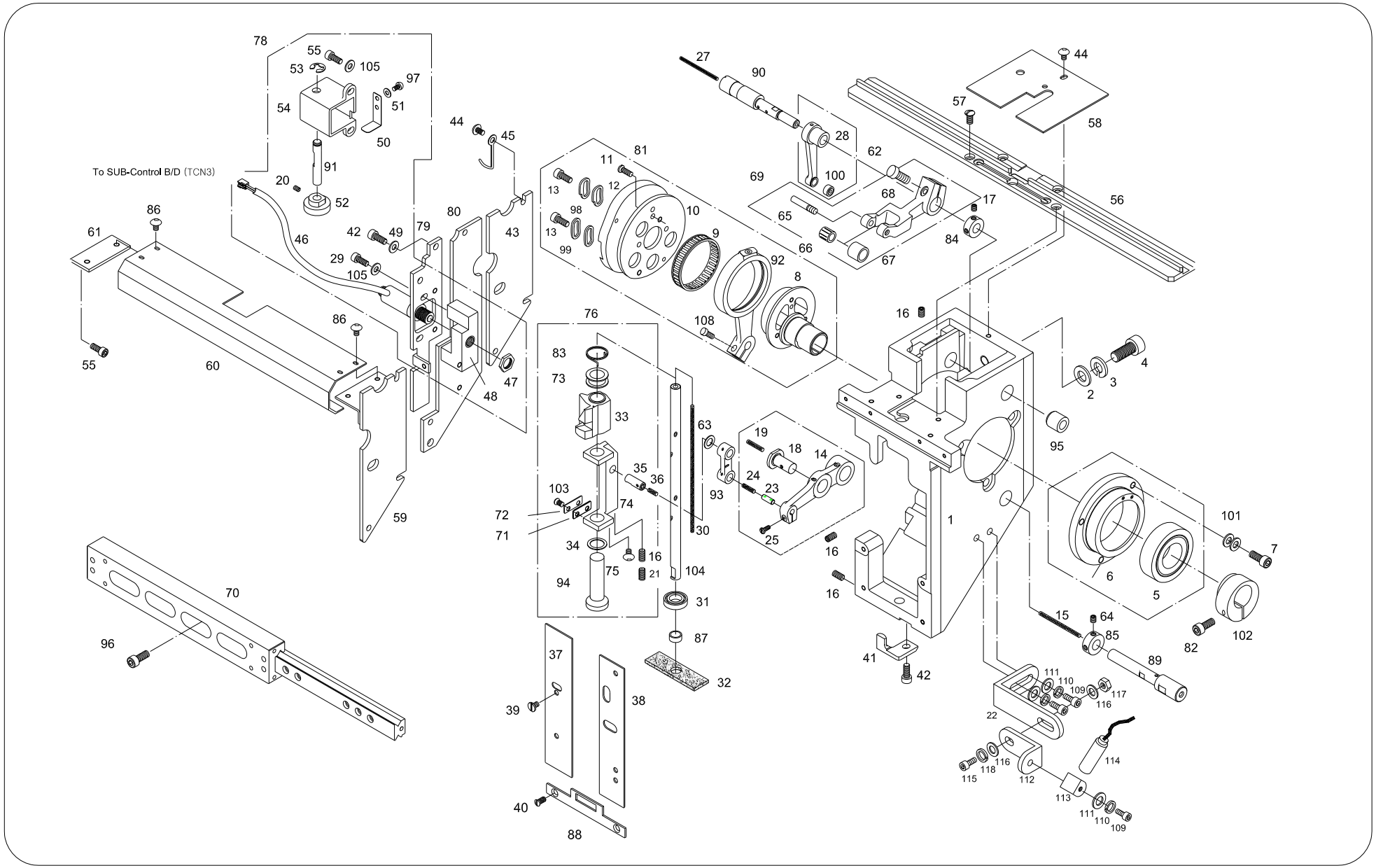

Ref.No	Part No.	Part Names	Q'ty
H-1	03001DC-A001	Arm	18
H-2	04029SW-A001	Stud Bolt Washer (@8)	54
H-3	15095SW-3115	Spring Washer (@8)	54
H-4	03002SC-4113	HEX. SOCKET BOLT (M8*L32)	54
H-5	01029BR-A001	Ball Bearing (6004zz)	18
H-6	03011AD-A001	Bearing Case	18
H-7	02031SC-7113	Hex. Socket Screw(M5*L10)	54
H-8	03010CL-A001	Needle Bar Driving Cam	18
H-9	03008BR-A001	Needle Cage (38419)	18
H-10	GP-024813-03	Take-Up Lever Cam Base	18
H-11	03007SC-A001	Cam Base Screw	54
H-12	CP-007495-00	TAKE-UP LEVER DRIVER CAM	18
H-13	02023SC-7113	HEX.SOCKET BOLT (M4*L8)	36
H-14	03303200H000	Needle Bar Drive Lever	18
H-15	-	Wick	18
H-16	03020SC-A001	Drive Pin Screw (11/64,N40,L8)	90
H-17	03022SC-4517	Hex.Socket Screw (M4*L5)	36
H-18	CP-007339-01	Connecting Rod Stud	18
H-19	-	Wick	18
H-20	03050SC-4517	HEX. SOCKET SET SCREW (M3*L3)	18
H-21	08113SC-A001	COLLAR SCREW 11/64,N=40,L6	18
H-22	03057SC-T121	Head Rail Screw 11/16,40,l12	1
H-23	PN-000452-00	Lever Pin	18
H-24	-	Wick	18
H-25	02015SC-7113	HEX.SOCKET BOLT(M4*L10)	18
H-27	-	Wick	18
H-28	03314100A000	Take-Up Lever "A"	18
H-29	02023SC-7113	Needle Driving	36
H-30	-	Wick	18
H-31	03051BR-A001	Ball Bearing 689	18
H-32	03053SF-A001	Felt "B"	18
H-33	GP-013756-00	Needle Bar Reciprocator	18
H-34	03048SW-A001	Reciprocator Washer	18
H-35	03033CW-A001	Driver Pin	18
H-36	-	Wick	18
H-37	03063PR-A001	Arm Guard Plate (L)	18
H-38	03064PR-A001	Arm Guard Plate (R)	18
H-39	03065SC-A001	Guard Plate Screw	72
H-40	05062SC-A001	Thread Guide (L) Screw	36
H-41	CP-007399-00	Head Rail Holder	18
H-42	03057SC-A001	Head Rail Holder Screw (11/64,L10)	54

Ref. No	Part No.	Part Names	Q'ty
H-43	03059PR-A001	Side Cover "B"	17
H-44	02009SC-A001	Bracket Screw	144
H-45	03062ET-A001	Code Clip	18
H-46	EP-000238-00	Jumping Sol.	18
H-47	06014SN-9111	Hex. Nut	18
H-48	06015DC-A001	Jump Sol. Bracket	18
H-49	06003SW-2111	Washer (@4)	18
H-50	06009PR-A001	Jump Clutch Plate Spring	18
H-51	06011SW-2111	Washer (@3)	36
H-52	06012CW-A001	Jump Clutch	18
H-53	06008SW-4013	E-Ring (@5)	18
H-54	06004PM-A001	Jump Sol. Cover	18
H-55	02015SC-7113	Hex. Socket Bolt (M4*L10)	36
H-56	07027AD-AE00	Take-Up Guide Rail 6C	18
	07026AD-A002	Take-Up Guide Rail 9C	18
	07025AD-AB00	Take-Up Guide Rail 12C	18
H-57	05041SC-A001	Guide Rail Screw (9/64,N=40)	72
H-58	GP-007318-00	Arm Top Cover	18
H-59	03060PR-A001	Side Cover "B1"	1
H-60	12001400BH00	Connecting Shaft Cover "B"	1
H-61	02003PR-A001	Cover Bracket	1
H-62	07016SC-7113	Hex.Socket Bolt (M4*L12)	18
H-63	03034SW-A001	Reciprocator Washer	36
H-64	04012AF-A001	Hook Shaft Bush Screw (15/64-28)	36
H-65	04019CW-T121	Pin Stud Screw	18
H-66	04021BR-T121	Neddle Bearing Kt367N (Iko)	18
H-67	04020AF-T121	Roller For Take-Up Gear-B	18
H-68	07018CA-UK01	Take-Up Driving Lever "B"	18
H-69	04017BM-UK01	Take-Up Driving Lever(B) Set	18
H-70	03069LM-B002	Lm Guide Block Set 9C	18
H-71	03048SW-A001	Reciprocator Washer	18
H-72	03039PR-B001	Reciprocator Bracket	18
H-73	03046CW-B001	Jump Spring Guide	18
H-74	03036CL-B001	Needle Driving Shaft Driver	18
H-75	03006MC-3123	Truss Screw (M3*L6)	18
H-76	03005BM-B001	Needle Bar Reeciprocator Set	18
H-78	03310000B000	JUMP SET	18
H-79	06001PR-B001	Jumping Sol. Base Plate	18
H-80	03058PR-B001	Side Cover "A"	18
H-81	03320010B001	Needle Driving CAM SET	18
H-82	05015MC-4113	HEX.SOCKET BOLT(M5*L15)	18

H

Arm

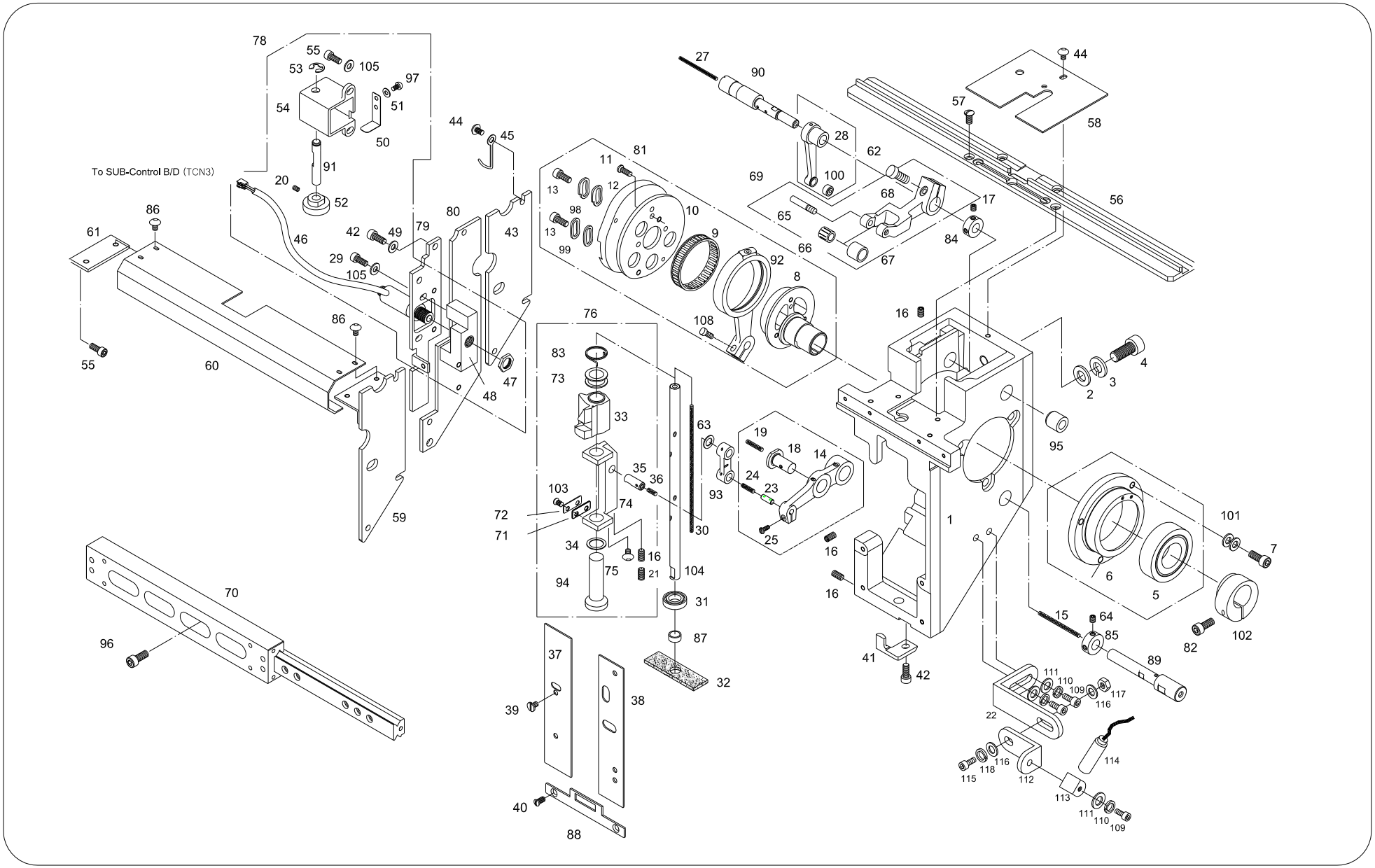

Ref.No	Part No.	Part Names	Q'ty
H-83	03045SP-B001	Jump Spring	18
H-84	03302100A000	Pin Collar	18
H-85	01101300A000	Hook Shaft Collar	18
H-86	02010SC-3123	Truss Screw (M4*L8)	2
H-87	03004400A000	Ball Bearing Bush	18
H-88	03302600H000	Arm Guide Plate	18
H-89	03301800B000	Needle Bar Drive Pin (Fork)	18
H-90	03301000B000	Take-Up Lever Drive Pin	18
H-91	03310700A000	Jump Clutch Pin	18
H-92	CP-007338-00	Connecting Rod	18
H-93	CP-007341-00	Needle Bar Drive Rink	18
H-94	03304700A000	Needle Bar Driving Shaft Bush	18
H-95	03301200A000	Bushing	18
H-96	03071SC-A001	Hex. Socket Bolt (M3*L15)	72
H-97	06010SC-8118	Plus Screw (M3*L4)	36
H-98	03300100A000	Cam Washer A	18
H-99	03300200A000	Cam Washer B	18
H-100	07143BR-A001	Bearing (693Zz)	18
H-101	02030SW-B001	BRARING CASE WASHER	108
H-102	03001500A000	UPPER SHAFT BEARING COLLAR	18
H-103	03006MC-8118	PLUS SCREW (M3*L6)	36
H-104	03204100A000	NEEDLE BAR DRIVING SHAFT	18
H-105	18015SW-3111	WASHER (4@)	36

Ref. No	Part No.	Part Names	Q'ty

I Color Change System

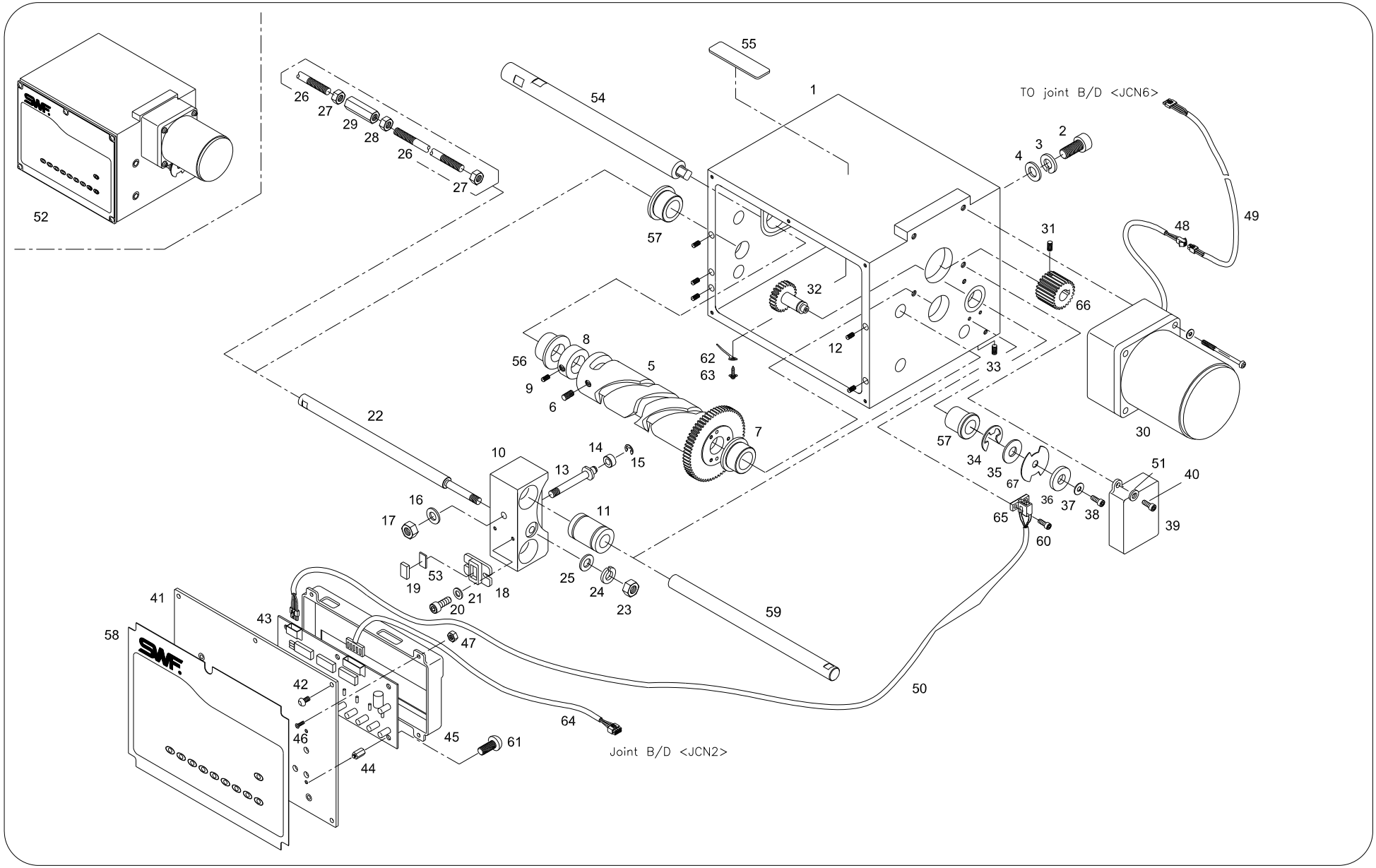

Ref.No	Part No.	Part Names	Q'ty
I-1	GP-005239-01	Color Change Box 6,9C	1
	GP-005255-01	Color Change Box 12C	1
I-2	03003SC-4113	Hex. Socket Bolt "B"(M8*L35)	4
I-3	15095SW-3115	Spring Washer (@8)	4
I-4	04029SW-A001	Stud Bolt Washer (@8)	4
I-5	13008BM-AE00	Color Change Cam Ass'Y	1
	13007BM-AC00	Color Change Cam Ass'Y 9C	1
	13006BM-AB00	Color Change Cam Ass'Y 12C	1
I-6	14060AF-4517	HEX.SOCKET SCREW(M6*L6)	4
I-7	13008GA-A001	Color Change Cam Gear	1
I-8	CL-000353-00	Cam Collar	1
I-9	04016AF-A001	Cam Collar Screw	2
I-10	13034AD-A001	Color Change Block	1
I-11	13035BR-A001	Guide Bushing	2
I-12	03020SC-A001	Drive Pin Screw (11/64,N40,L8)	5
I-13	13040CW-A001	Roller Shaft	1
I-14	13043CW-A001	Roller	1
I-15	13044SR-4013	E-Ring (@4)	1
I-16	08057SW-1111	Washer (@6)	1
I-17	13042SN-1111	Hex. Nut (M6*T5-R)	1
I-18	13036PR-A001	Magnet Holder	1
I-19	10-027C-SC53	Magnet	1
I-20	22006SC-7113	HEX. SOCKET BOLT (M3*L8)	2
I-21	06011SW-2111	Washer (@3)	2
I-22	17055SH-A005	COLOR CHANGE SHAFT "A" (100 under)	1
	17054SH-AB00	COLOR CHANGE SHAFT "A" (120 over)	
I-23	13042SN-1111	Hex. Nut (M6*T5-R)	1
I-24	03026SW-9115	Spring Washer (@6)	1
I-25	03025SW-1211	Washer (@6)	1
I-26	08000100BEK0	COLOR CHANGE SHAFT "B"(L1958)	1
	17067SH-AE00	COLOR CHANGE SHAFT "C"(L1192)	1
	17032SH-AC01	COLOR CHANGE SHAFT "B"	1
	17068SH-A004	COLOR CHANGE SHAFT "D"(L1915)	1
I-27	13042SN-1111	Hex. Nut (M6*T5-R)	3
I-28	17053SN-1111	Hex. Nut (M6*T5-L)	2
I-29	17051SN-A001	Mes Driving Shaft Joint	2
I-30	13028MT-A001	Color Change Motor Unit	1
I-31	13030SC-4517	Hex. Socket Set Screw (M4*L8)	1
I-32	13014GA-A001	Half Turn Gear	1
I-33	03020SC-A001	Drive Pin Screw (11/64,N40,L8)	1
I-34	08044SR-4013	E-Ring (@8)	1

Ref. No	Part No.	Part Names	Q'ty
I-35	13018PR-A001	Half Turn Film Washer "A" (T2.3)	1
I-36	13019PR-A001	Half Turm Film Washer "B" (T1)	1
I-37	18015SW-3111	WASHER (4@)	1
I-38	02023SC-7113	HEX.SOCKET BOLT (M4*L8)	1
I-39	13025PM-A001	Sensor Cover	1
I-40	02015SC-7113	HEX.SOCKET BOLT(M4*L10)	2
I-41	13053PR-A005	Membrane Switch Cover 6,9C	1
	13052PR-AB00	Membrane Switch Cover 12C	1
I-42	03006MC-9123	TRUSS SCREW(M3*L6) SUS	5
I-43	BD-000349-00	Color Change Board 6C	1
	BD-000350-00	Color Change Board (9C)	1
	BD-000352-00	Color Change Board 12C	1
I-44	GP-008534-00	Stud Bolt	6
I-45	13060ET-A005	Board Cover 6,9C	1
	13059ET-AB00	Board Cover 12C	1
I-46	13061SC-8119	Plus Screw (M3*L10)	4
I-47	05057SN-3211	Hex. Nut (M3)	4
I-48	25101ET-B001	Color Change Connector	2
I-49	25015EL-A001	Color Change-Joint B/D (25-15)	1
I-50	25073EL-A001	Half Turn Sensor Cable (25-73)	1
I-51	18015SW-3111	Washer (4@-S)	2
I-52	AS-000697-02	COLOR CHANGE BOX SET (6C)	1
	AS-000506-02	COLOR CHANGE BOX SET (9C)	1
	AS-000698-02	COLOR CHANGE BOX SET (12C)	1
I-53	08106200B000	Magnet Holder Spacer	1
I-54	08101003B000	Cam Shaft (6,9C)	1
	13009SF-AB00	Cam Shaft (12C)	1
I-55	09000300B000	Magnet Sticker	1
I-56	08101100B000	Cam Bushing	2
I-57	08101500B000	Half Turn Bushing	2
I-58	CP-007547-00	Membrane Switch	1
I-59	08103203B000	Guide Shaft	2
	13031SH-AB00	Guide Shaft 12C	2
I-60	15163SC-3123	Truss Screw (M3*L12)	2
I-61	06010SC-8118	Plus Screw (M3*L4)	6
I-62	03062ET-A001	Code Clip	2
I-63	22025SC-9134	Screw (M4*L10)	2
I-64	02102800HDK2	Needle Position To Joint B/D	1
I-65	08102300B000	Half Turn Sensor	1
I-66	08102900B000	Motor Gear	1
I-67	08101700B000	Half Turn Film	1

J

Upper Thread Catcher Set

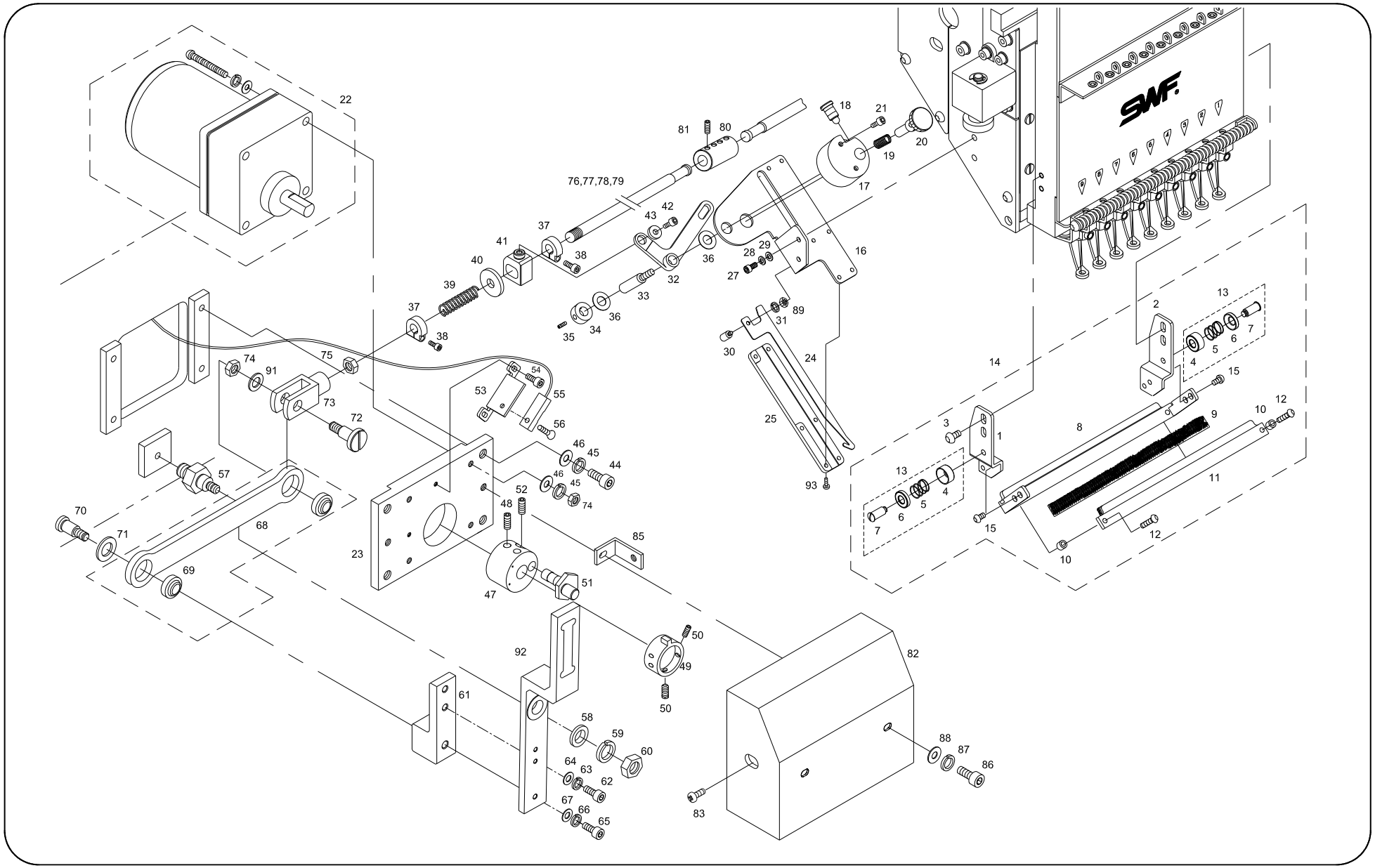

Ref.No	Part No.	Part Names	Q'ty
J-1	09040PR-A001	Bracket (L)	18
J-2	09041PR-A001	Bracket (R)	18
J-3	02009SC-A001	Bracket Screw	72
J-4	09044PR-A001	Upper Thread Holder Disk "A"	72
J-5	-	Spring	36
J-6	-	Upper Thread Holder Disk "B"	36
J-7	-	Upper Thread Holder Stud	36
J-8	09034PR-AE00	Upper Thread Presser Base 6C	18
	09030PR-A002	Upper Thread Presser Base 9C	18
	09026PR-AB00	Upper Thread Presser Base 12C	18
J-9	09035ET-AE00	Velcro 6C	36
	09031ET-A002	Velcro 9C	36
	09027ET-AB00	Velcro 12C	36
J-10	09038CW-A001	Thread Presser Space	36
J-11	09037PR-AE00	Presser Base Cover 6C	18
	09033PR-A002	Presser Base Cover 9C	18
	09029PR-AB00	Presser Base Cover 12C	18
J-12	07018SC-8118	Plus Screw (M3*L8)	36
J-13	09044PR-A001	Upper Thread Holder Disk "A" Set	36
J-14	08600002B000	UPPER THREAD BASE SET 6C	18
	08600003B000	UPPER THREAD BASE SET 9C	18
	08600004B000	UPPER THREAD BASE SET 12C	18
J-15	06010SC-8118	Plus Screw (M3*L4)	72
J-16	03500100H000	Upper Thread Catcher Base	18
J-17	03500900H000	Clutch Block	18
J-18	03501000H000	Clutch Stud Screw	18
J-19	03501100H000	Clutch Spring	18
J-20	03501200H000	Clutch Dial	18
J-21	11029SC-4113	Hex. Socket Bolt (M4*L20)	36
J-22	03003100H000	Upper Thread Hook Motor Unit	1
J-23	03003210H000	MOTOR BASE	1
J-24	03500320H000	UPPER THREAD CATCHER	18
J-25	03500210H000	Base Cover	18
J-26	03005MC-3123	TRUSS SCREW (M3*L5)	108
J-27	02023SC-7113	Hex.Socket Bolt (M4*L8)	36
J-28	18014SW-3115	Spring Washer (@4-No2)	36
J-29	18015SW-3111	Washer (4@-S)	36
J-30	03500400H000	Upper Catcher Connect Pin	18
J-31	11019SW-9115	Spring Washer (@3)	18
J-32	03500500H000	Upper Catcher Driving Lever	18
J-33	03500600H000	Driving Lever Pin	18

Ref. No	Part No.	Part Names	Q'ty
J-34	03500700H000	Driving Lever Pin Collar	18
J-35	04014SC-4517	Hex.Socket Set Screw(M5*L5)	36
J-36	03500800H000	Driving Lever Pin Washer	36
J-37	03002610H000	Return Spring Stopper	36
J-38	05008SC-4113	Hex. Socket Bolt (M4*L16)	36
J-39	03002700H000	Return Spring	18
J-40	03002800H000	Return Spring Stopper Washer	18
J-41	03003000H000	Return Spring Fix Pin	18
J-42	02015SC-7113	Hex.Socket Bolt(M4*L10)	18
J-43	03002900H000	Return Spring Fix Pin Washer	18
J-44	06025MC-7113	Hex. Socket Bolt (M6*L25)	4
J-45	16014SW-4115	Spring Washer (@8)	4
J-46	08057SW-1111	Washer (@6)	4
J-47	03003300H000	Cam Shaft Fixing Block	1
J-48	05008MC-4517	Hex. Socket Bolt (M5*L8)	2
J-49	GP-005184-01	SENSOR SENSING ADJUSTING RING	1
J-50	04014SC-4517	Hex.Socket Set Screw(M5*L5)	2
J-51	03003500H000	Motor Driving Cam Shaft	1
J-52	04014SC-4517	Hex.Socket Set Screw(M5*L5)	1
J-53	GP-005180-00	UPPER THREAD HOOK SENSOR BASE	1
J-54	07035SC-7113	Bracket Screw (M3*L6)	2
J-55	15-027A-2070	SENSOR	1
J-56	13061SC-8119	Plus Screw (M3*L10)	1
J-57	03003810H000	STUD BOLT FOR DRIVING PLATE	1
J-58	03004000H000	Stud Bolt Washer	1
J-59	16014SW-4115	Spring Washer (@8)	1
J-60	13042SN-1111	Hex. Nut (M6*T5-R)	1
J-61	03004100H000	Driving Plate Block	1
J-62	03016SC-4113	Hex. Socket Bolt (M5*L15)	2
J-63	18048SW-3115	Spring Washer (@5)	2
J-64	18049SW-3111	Washer (@5)	2
J-65	08091SC-7113	Hex. Socket Bolt (M6*L20)	1
J-66	16014SW-4115	Spring Washer (@8)	1
J-67	08057SW-1111	Washer (@6)	1
J-68	03004200HH00	MOTOR DRIVING CONNECT PLATE	1
J-69	03004400H000	Motor Driving Connect Bearing	2
J-70	03008300H000	Connecting Plate Pin	1
J-71	03004500H000	Connecting Plate Pin Washer	1
J-72	03004700H000	Connecting Plate Stud Screw	1
J-73	03004800H000	Connecting Plate Knuckle	1
J-74	13042SN-1111	Hex. Nut (M6*T5-R)	1

J

Upper Thread Catcher Set

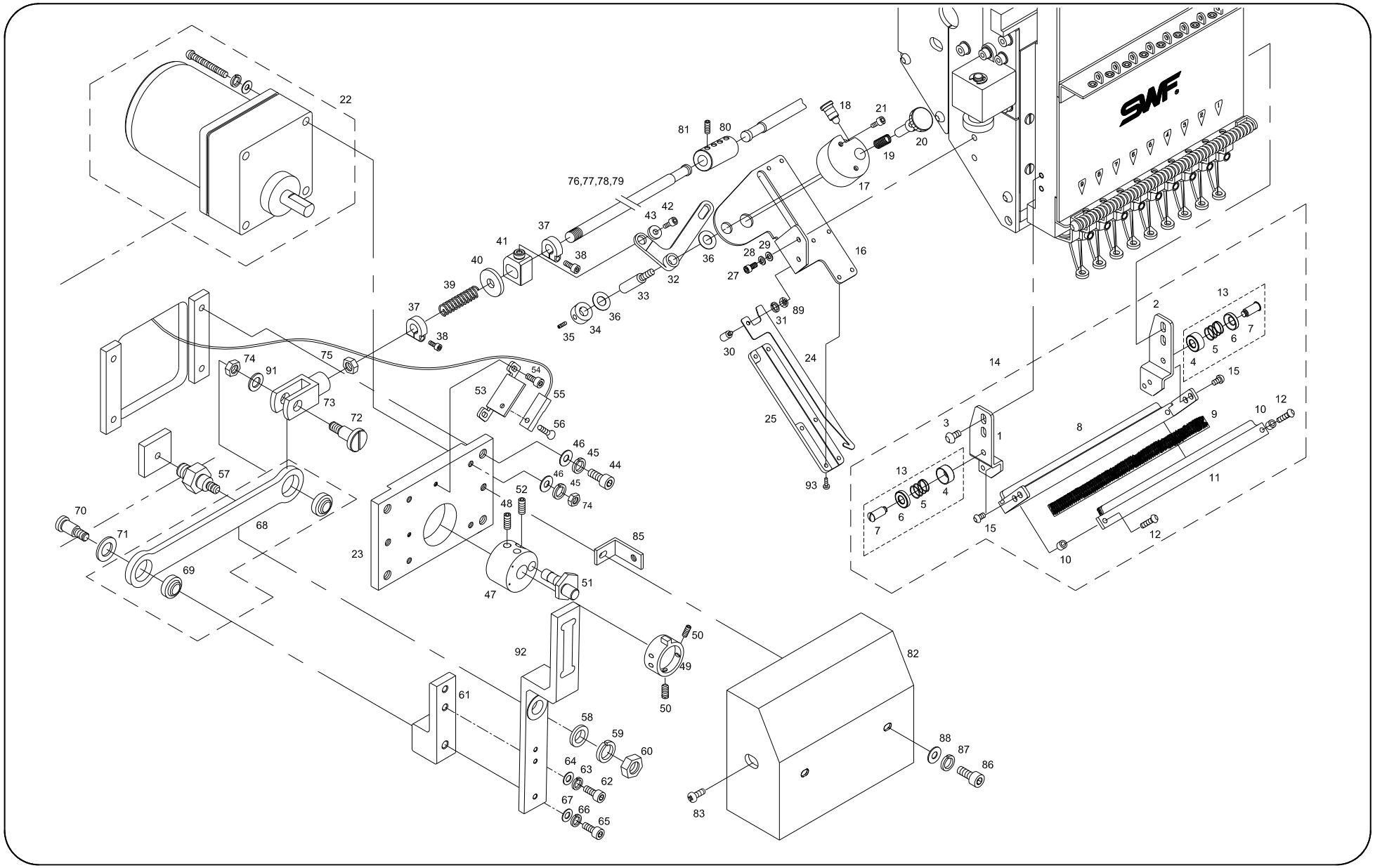

Ref.No	Part No.	Part Names	Q'ty
J-75	04032SN-A001	Hex. Nut (M8)	1
J-76	03007000HEK0	UPPER THREAD DRIVING SHAFT A	1
J-77	03007100HHI0	UPPER THREAD DRIVING SHAFT B	1
J-78	03007200HEK0	UPPER THREAD DRIVING SHAFT C	1
J-79	03007200HHI0	UPPER THREAD DRIVING SHAFT C	1
J-80	03007300H000	Upper Thread Shaft Coupling	2
J-81	08113SC-A001	Collar Screw (11/64, L6)	8
J-82	12001910H000	Upper Thread Hook Motor Cover	1
J-83	02010SC-3123	Truss Screw (M4*L8)	2
J-85	03008600H000	Motor Cover Fixing Bracket	2
J-86	02023SC-7113	Hex.Socket Bolt (M4*L8)	2
J-87	18014SW-3115	Spring Washer (@4-No2)	2
J-88	18015SW-3111	Washer (4@-S)	2
J-89	11014SN-1211	Hex. Nut (M3)	18
J-91	03026SW-9115	Spring Washer	1
J-92	03003910H000	Upper Thread Driving Plate	1
J-93	03005MC-3123	TRUSS SCREW (M3*L5)	108

Ref. No	Part No.	Part Names	Q'ty

K

Head

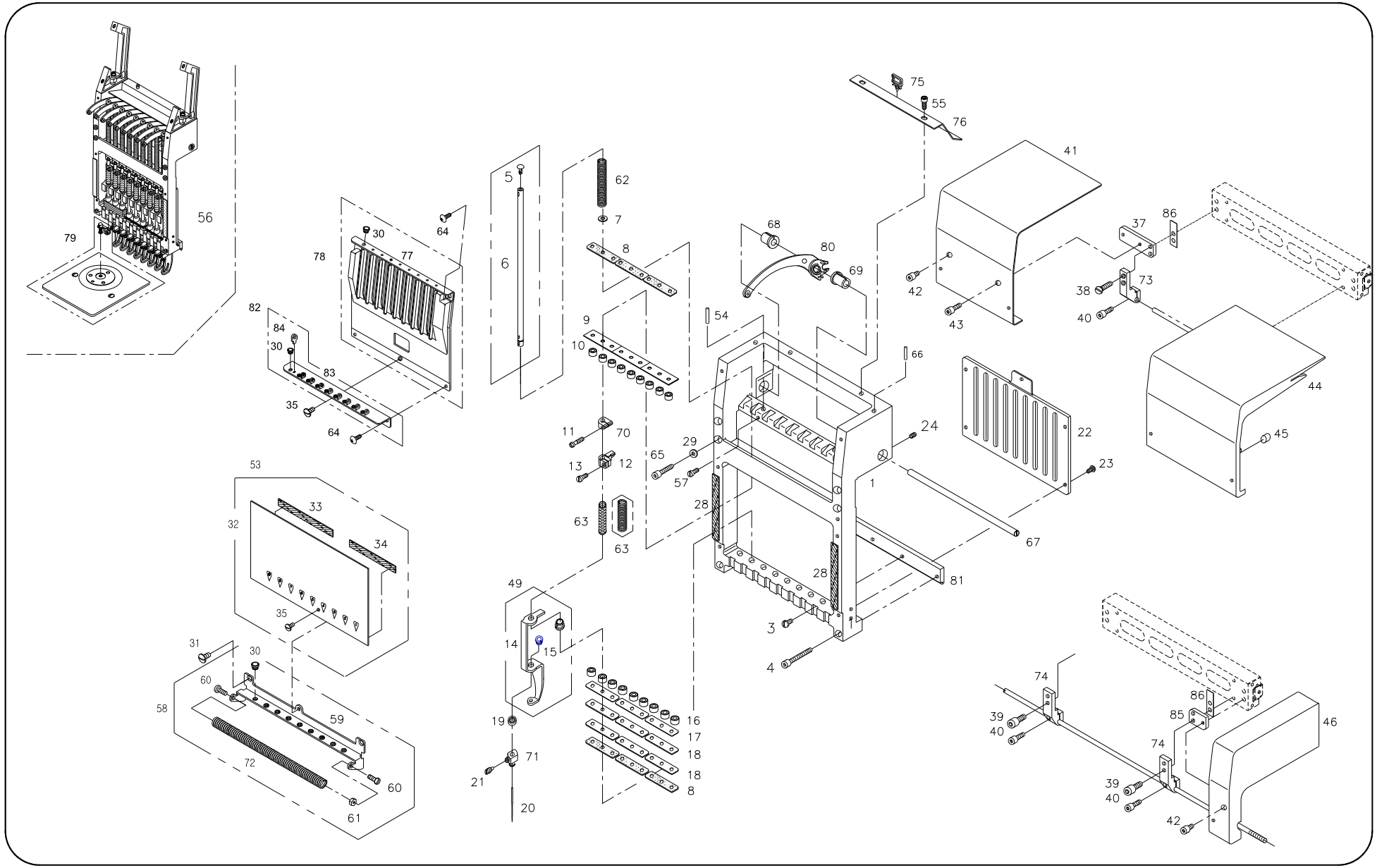
56
79
78
77
30
64
82
84
30
83
35
64
5
6
62
7
8
9
10
11
70
13
12
63
63
53
33
32
34
35
31
30
60
58
59
72
60
61
49
14
15
19
71
21
20
16
17
18
18
8
68
80
69
54
66
75
55
76
41
42
43
37
86
38
73
40
44
45
22
23
24
1
67
81
29
65
57
28
28
3
4
74
39
40
86
85
74
39
40
42
46

Ref.No	Part No.	Part Names	Q'ty
K-1	08200102H000	Head (6C)	18
	08200103H000	Head (9C)	18
	05001CA-AB00	Head (12C)	18
K-3	05013SC-A001	Head Rail Screw	2
K-4	05014SC-7113	Hex. Socket Bolt (M4X125)	36
K-5	CP-007343-00	Neele Bar Cover Screw (M5X16)	162
K-6	CP-007345-00	Needle Bar	162
K-7	05022SW-A001	Spring Shoe Washer	162
K-8	05021SF-A001	Felt	108
K-9	05023RB-A001	Needle Bar Cushion Rubber "A"	54
K-10	05024RB-A001	Needle Bar Cushion Rubber "B"	162
K-11	05026SC-A001	Stopper Screw	162
K-12	05027FU-A001	Needle Bar Holder	162
K-13	05028SC-4113	Holder Screw (9/64-L8)	162
K-14	CP-007350-00	Presser Foot (New) @4	162
K-15	CP-007344-00	Presser Foot Guide Bush	324
K-16	05032RB-A001	Presser Foot Cushion Bubber "B"	162
K-17	05033RB-A001	Presser Fot Adjusting Rubber "B" (T=0.5)	54
K-18	05034RB-A001	Presser Foot Adjusting Rubber "A" (T=1)	108
K-19	05035RB-A001	Presser Foot Cushion Rubber "A"	162
K-20	05037DB-A001	Needle (Db-K5, #11)	162
K-21	05363SC-A001	Needle Fixed Screw	162
K-22	05040PM-AE00	Needle Bar Guide Rail (6C)	18
	CP-007348-00	Needle Bar Guide Rail (9C)	18
	05038PM-AB00	Needle Bar Guide Rail (12C)	18
K-23	05041SC-A001	Guide Rail Screw (9/64,N=40)	126
K-24	07009SC-4517	Hex. Socket Set Screw (M5*L6)	486
K-28	05063RB-A001	Megnetic Rubber "A"	36
K-29	06003SW-2111	Washer (@4)	72
K-30	05452CM-A001	Evelet "A"	486
K-31	05062SC-A001	Thread Guide (L) Screw	36
K-32	05661PR-AE00	Head Face Plate (L) (6C)	18
	05651PR-A002	Head Face Plate (L) (9C)	18
	05641PR-AB00	Head Face Plate (L) (12C)	18
K-33	05642RB-A001	Magnetic Rubber "B" (9C)	18
		Magnetic Rubber "B" (12C)	18
K-34	05643RB-AB00	Magnetic Rubber "C" (6C)	36
		Magnetic Rubber "C" (9C)	18
		Magnetic Rubber "C" (12C)	36
K-35	05062SC-A001	Thread Guide (L) Screw	36

Ref. No	Part No.	Part Names	Q'ty
K-37	CP-007637-00	Top Shaft Cover (L) Bracket	1
K-38	13048SC-A001	Bracket "A" Screw	2
K-39	02031SC-7113	Hex. Socket Screw(M5*L10)	40
K-40	02015SC-7113	Hex. Socket Bolt (M4*L10)	36
K-41	12000300H000	Top Shaft Cover (L)	1
K-42	02014SC-7113	Hex. Socket Bolt (M4*L5)	2
K-43	02015SC-7113	Hex. Socket Bolt (M4*L10)	1
K-44	02018PM-AE01	Top Shaft Cover(M)	17
K-45	02023ET-A001	Top Shaft Cover Magnet	34
K-46	02016PR-AB00	Top Shaft Cover (R)	1
K-49	05029BM-A001	Presser Foot Set	162
K-53	05066PR-AE00	Head Face Plate (L) Set 6C	18
	05065PR-AC00	Head Face Plate (L) Set 9C	18
	05064PR-AB00	Head Face Plate (L) Set 12C	18
K-54	05015CW-A001	Head Base Pin (@5*L15)	36
K-55	02002SC-7119	Pluss Screw (M4*L8)	36
K-56	08200002B000	Head (Set) 6C	18
	08200003B000	Head (Set) 9C	18
	08200004B000	Head (Set) 12C	18
K-57	03022SC-4517	Hex.Socket Screw (M4*L5)	36
K-58	10400002B000	Thread Guide (L) Set 6C	18
	10400003B000	Thread Guide (L) Set 9C	18
	10400004B000	Thread Guide (L) Set 12C	18
K-59	10400102B000	Thread Guide (L) 6C	18
	10400103B000	Thread Guide (L) 9C	18
	10400104B000	Thread Gudie (L) 12C	18
K-60	096440C-8119	Spring Adjusting Screw (9/64, N40, L11.8)	36
K-61	096440N-3211	Spring Adjusting Nut (9/64, N40)	18
K-62	05020AF-A001	Needle Bar Return Spring	162
K-63	05029AF-A001	Presser Foot Pressure Spring	162
	05029AF-L001	Presser Foot Pressure Spring (Leather)	162
K-64	05070SC-3123	Head Face Plate (U) Screw	72
K-65	05008SC-4113	Hex. Socket Bolt (M4*L16)	72
K-66	01303700H000	Tension Plate Pin	36
K-67	08200602A000	Take-Up Lever Shaft (6C)	18
	08200503A000	Take-Up Lever Shaft (9C)	18
	08200404A000	Take-Up Lever Shaft (12C)	18
K-68	08203000A000	Take-Up Bush (L)	18
K-69	08200800A000	Take-Up Bush (R)	18
K-70	11101200T000	Upper Dead Point Stopper	162

K

Head

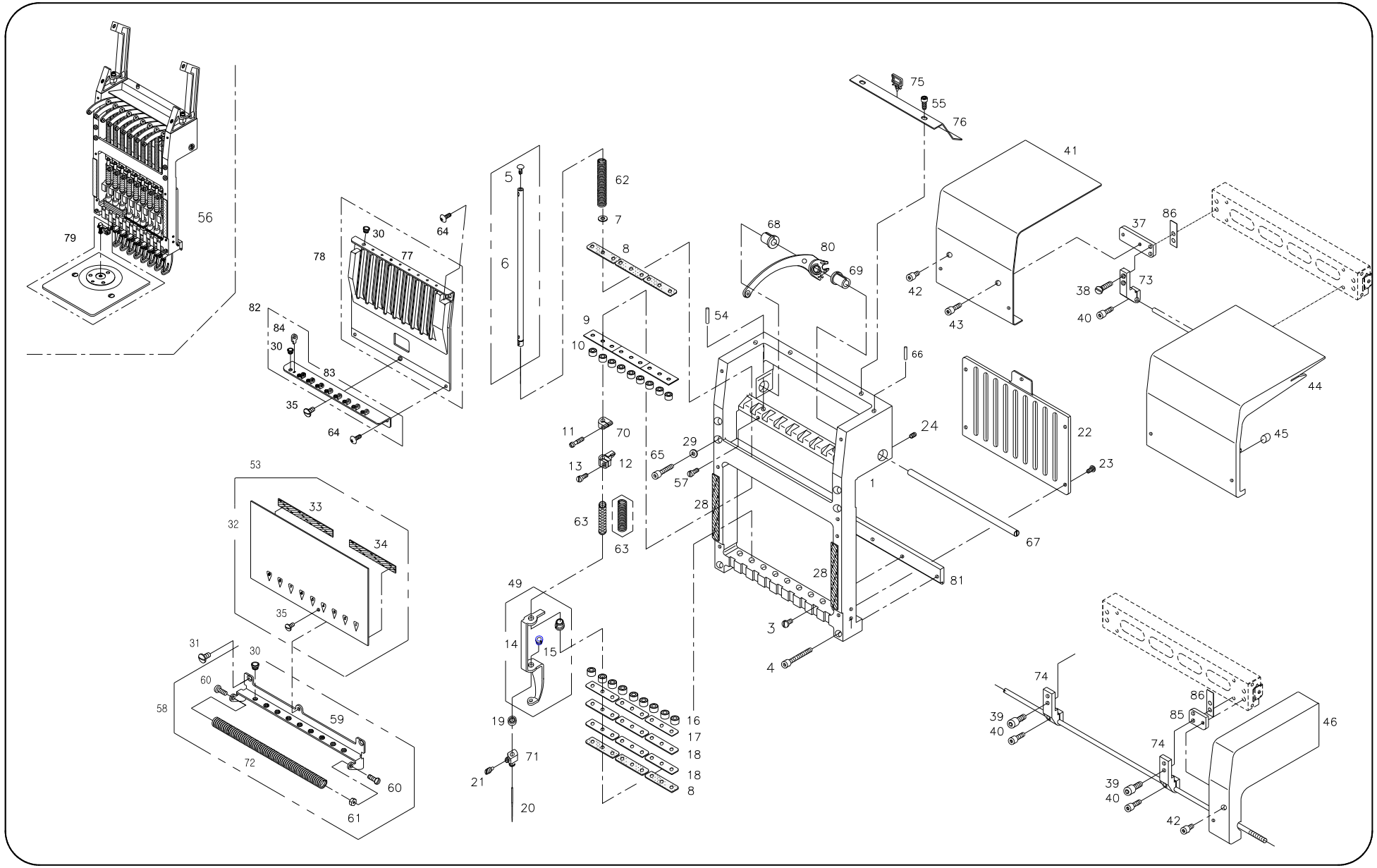
56
79
78
77
30
64
82
84
30
83
35
64
5
6
62
7
8
9
10
11
70
13
12
63
63
53
33
32
34
35
31
30
60
58
59
72
60
61
49
14
15
19
71
21
20
16
17
18
18
8
68
80
69
54
66
75
55
76
41
42
43
37
86
38
73
40
44
45
22
23
24
1
67
81
29
65
57
28
28
3
4
74
39
40
86
85
74
39
40
42
46

Ref.No	Part No.	Part Name		Q'ty
K-71	05036CW-A001	Needle Fixed Holder		162
K-72	10400212B000	Spring (6C)		18
	10400213B000	Spring (9C)		18
	10400214B000	Spring (12C)		18
K-73	08004700A000	Color Change Bracket "A"		1
K-74	08004900A000	Color Change Bracket "B"		35
K-75	11035ET-A001	Cable Holder Mount		18
K-76	11047PR-A002	Cable Support Plate		18
K-77	10200102B000	Head Face Plate (U) (6C)		18
	CP-007482-00	Head Face Plate (U) (9C)		
	10200104B000	Head Face Plate (U) (12C)		
K-78	10200002B000	THREAD GUIDE (U) SET 6C		18
	10200003B000	Thread Guide (U) Set 9C		
	10200004B000	Thread Guide (U) Set 12C		
K-79	18000000H000	Boring Device (Option)		18
K-80	CP-007713-00	TAKE-UP LEVER SET		162
K-81	08201302H000	HEAD RAIL	(6C)	18
	CP-007342-00	HEAD RAIL	(9C)	
	08201304H000	HEAD RAIL	(12C)	
K-82	10300002A000	Thread Guide (M) Set	(6C)	18
	10300003A000	Thread Guide (M) Set	(9C)	
	10300004A000	Thread Guide (M) Set	(12C)	
K-83	10300112A000	Thread Guide (M)	(6C)	18
	10300113A000	Thread Guide (M)	(9C)	
	10300114A000	Thread Guide (M)	(12C)	
K-84	10110000A000	Evelet "B"	(6C)	108
	10110000A000	Evelet "B"	(9C)	162
	10110000A000	Evelet "B"	(12C)	216
K-85	CP-007638-00	Top Shaft Cover (B) Bracket		1
K-86	CP-227583-00	Top Shaft Cover Base		18

Ref. No	Part No.	Part Name	Q'ty

L

Thread Tension Unit

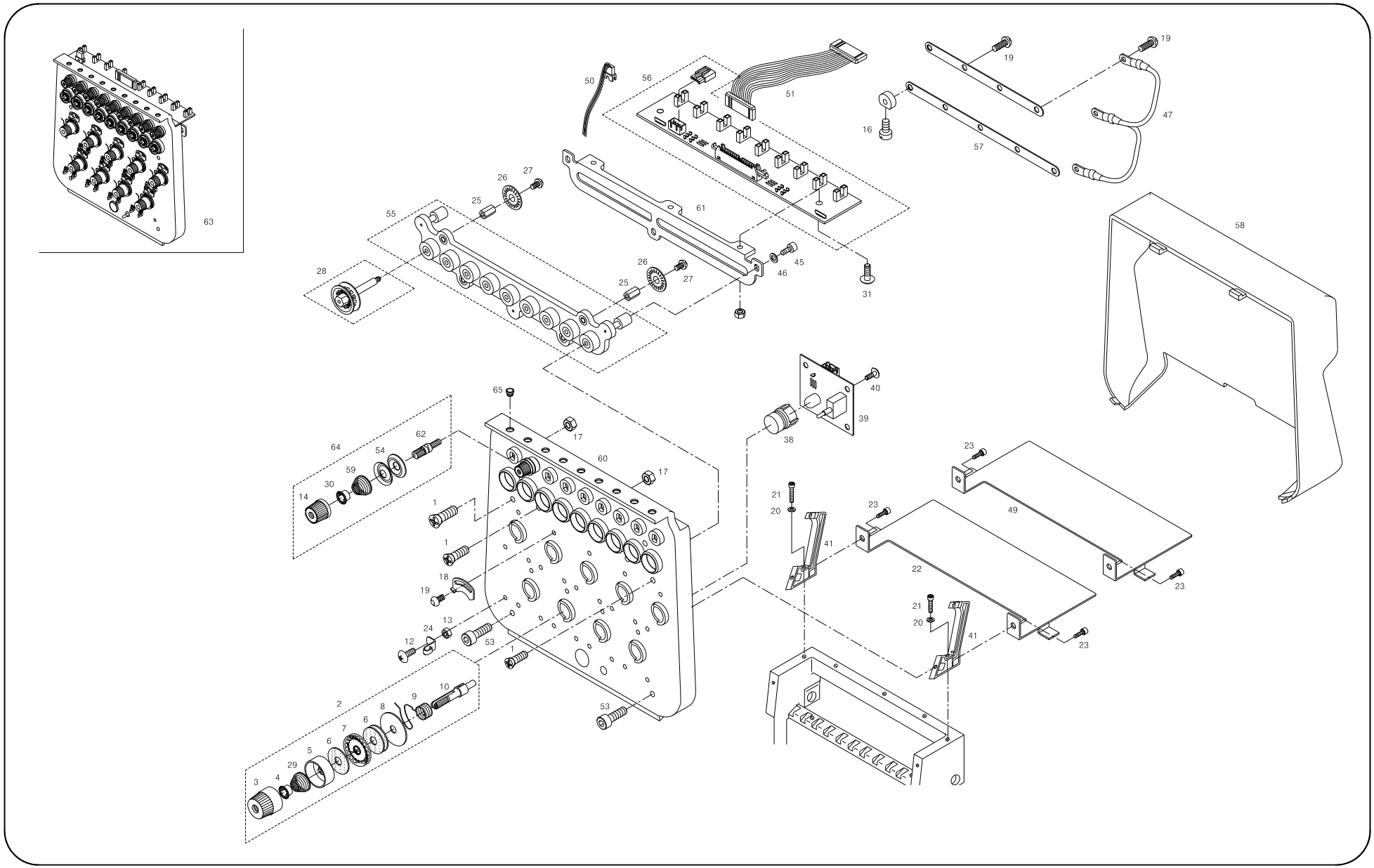

Ref.No	Part No.	Part Name	Q'ty
L-1	02015SC-7113	C.S Screw (M4*L10)	36
L-2	08310000B000	Tension Adjusting Set	162
L-3	08300500A000	Tension Adjusting Nut	162
L-4	08300700A000	Tension Spring Stopper	162
L-5	11086PM-A001	Tension Spring Collar	162
L-6	11084AF-A001	Felt	486
L-7	11085AF-A001	Rotary Tension Disc	162
L-8	11083PM-A001	Disc Plate	162
L-9	11082AF-A001	Thread Take-Up Spring	162
L-10	11081CW-A001	Thread Tension Adjusting Stud	162
L-11	11009SC-A001	Stud Screw	162
L-12	09005SC-3123	Toothed Lock Washer	486
L-13	11014SN-1211	Hex. Nut (M3)	486
L-14	08300600A000	Sub Tension Adjusting Nut (A)	162
L-17	03031SN-A001	Pin. Nut (11/64,N=40)	162
L-18	11009PR-B001	Thread Breakage Detecting Plat	162
L-19	09005SC-3123	Truss Screw (M3*L6)	324
L-20	05009SW-1111	Washer(@4)	36
L-21	11029SC-4113	Hex. Socket Bolt (M4*L20)	36
L-22	11033PR-AE00	Cover Plate 6C	17
	11032PR-A002	Cover Plate 9C	17
	11031PR-AB00	Cover Plate 12C	17
L-23	02023SC-7113	Hex. Socket Bolt (M4*L8)	6
L-24	11012PR-B001	Thread Guide (New)	270
	11012PR-B001	Thread Guide (New)	486
	11012PR-B001	Thread Guide (New)	666
L-25	11083CW-B001	Thread Detecting Wheel Stud	90
	08308300B000	Thread Detecting Wheel Stud	72
L-26	GP-005179-00	THREAD BREAKAGE DETECT WHEEL	162
L-27	08011SC-8118	Screw (M2*L4)	162
L-28	CP-007479-00	Thread Sensor Roller(B1)Set	162
L-29	08300800A000	Tension Adjusting Spring	90
L-31	02010SC-3123	Truss Screw (M4*L8)	162
L-38	CP-007496-00	Lamp Cover	18
L-39	BD-000802-01	Head On/Off S/W Board (6,12C)	18
	BD-000980-00	Head On/Off S/W Board (9,15C)	18
L-40	09005SC-3123	Truss Screw (M3*L6)	72
L-41	08202000A000	Tension Plate Holder (6,9C)	36
	08202000I000	Tension Plate Holder (12C)	
L-45	02023SC-7113	Hex.Socket Bolt (M4*L8)	54

Ref. No	Part No.	Part Name	Q'ty
L-46	06003SW-2111	Washer (4@-S)	54
L-47	02103903H000	Wheel Earth 9C	18
L-49	08003202B000	Cover Plate (R) 6C	1
	08003203B000	Cover Plate (R) 9C	1
	08003204B000	Cover Plate (R) 12C	1
L-50	02101800B000	Plate Led S/W Board Cable	18
L-51	02102200U000	Sensor Board/Adjusting Plate Cable	18
L-53	02015SC-7113	Hes. Socket Bplt (M4*L10)	36
L-54	08301200I000	TENSION DISC	324
L-55	08300702I000	Roller Base Ass'Y (6C)	18
	CP-007481-00	Roller Base Ass'Y (9C)	
	08300704I000	Roller Base Ass'Y (12C)	
L-56	BD-000795-00	Wheel Sensor Board (6C)	18
	BD-000616-02	Wheel Sensor Board (9C)	
	BD-000617-02	Wheel Sensor Board (12C)	
L-57	08300302I000	CONNECTION PLATE (6C)	36
	08300303I000	CONNECTION PLATE "A" (9C)	18
	08300403I000	CONNECTION PLATE "B" (9C)	18
	08300304I000	CONNECTION PLATE (12C)	18
L-58	CP-007632-00	TENSION PLATE COVER (9C)	18
	08000804I000	TENSION PLATE COVER (12C)	18
L-59	08301100I000	TENSION SPRING	162
L-60	08300102I000	TENSION UNIT (6C)	18
	CP-007480-00	TENSION UNIT (9C)	18
	08300104I000	TENSION UNIT (12C)	18
L-61	08300202I000	BOARD BASE (6C)	18
	08300203I000	BOARD BASE (9C)	18
	08300204I000	BOARD BASE (12C)	18
L-62	08301000I000	TENSION ADJUSTING STUD	162
L-63	08300002I000	TENSION UNIT SET (6C)	18
	08300003I000	TENSION UNIT SET (9C)	
	08300004I000	TENSION UNIT SET (12C)	
L-64	08320000I000	SUB TENSION ADJUSTING SET	162
L-65	05452CM-A001	EYELET "A"	162

M

Sub-Control Unit & Lamp

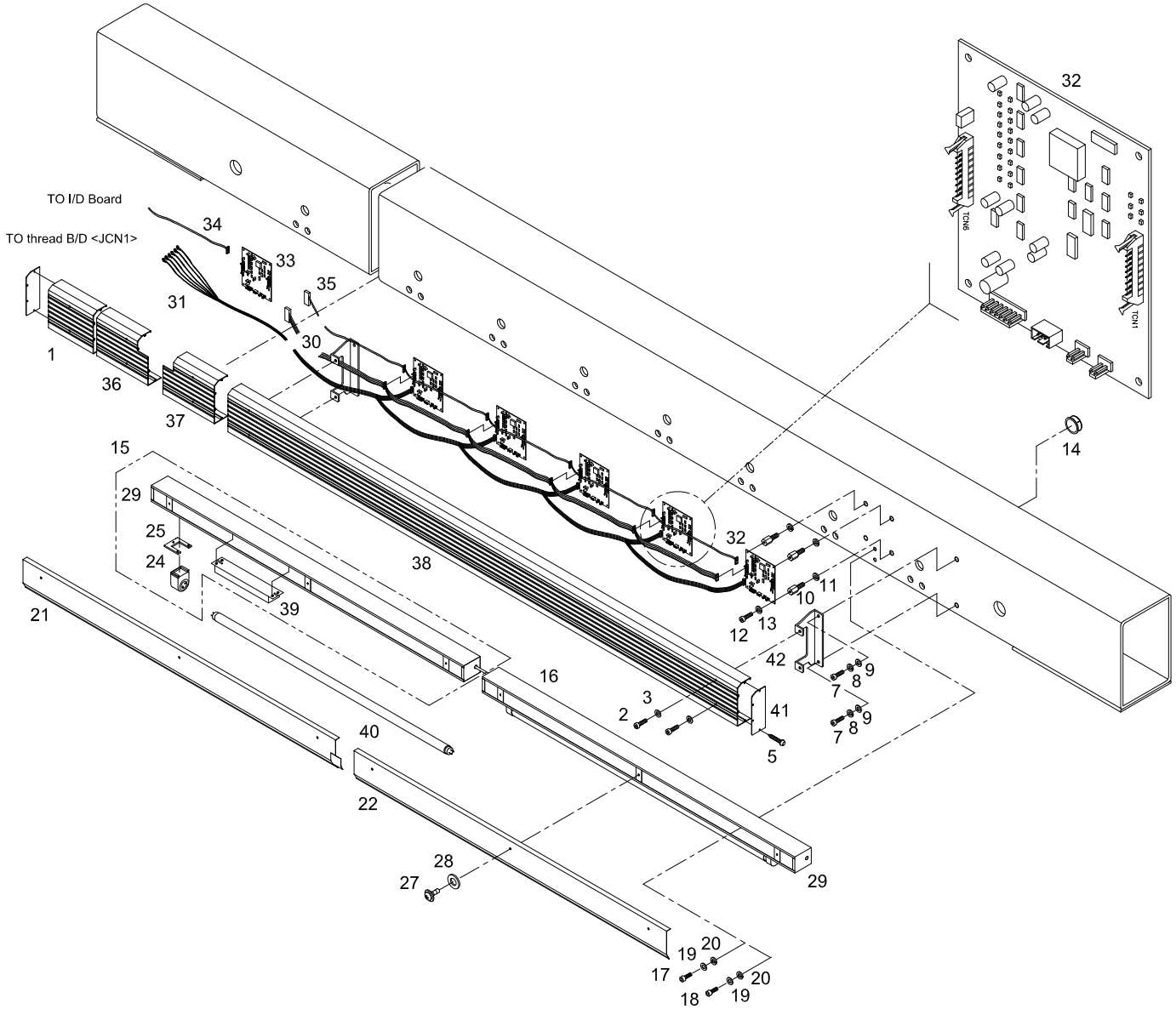

SWF/GE-Series

Ref.No	Part No.	Part Name	Q'ty
M-1	02058AD-AB00	Cable Cover (A)	1
M-2	02031SC-7113	Hex. Socket Screw(M5*L10)	16
M-3	18049SW-3111	Washer (@5)	16
M-5	02065SC-3328	Tapping Screw (M3*L10)	8
M-7	08076SC-7113	Hex. Socket Bolt (M5*L12)	12
M-8	18048SW-3115	Spring Washer (@5)	12
M-9	16018SW-1111	Washer (@5)	12
M-10	11049SC-A001	Board Stud Bolt	72
M-11	18048SW-3115	Spring Washer (@5)	72
M-12	18154SC-9134	Plus Screw (M3*L8)	72
M-13	11019SW-9115	Spring Washer (@3)	72
M-14	02017PM-A001	Cable Ring	18
M-15	AS-000449-00	Lamp Ass,Y	1
M-16	AS-000451-00	Lamp Ass,Y	2
M-17	03016SC-4113	Hex. Socket Bolt (M5*L15)	16
M-18	02031SC-7113	Hex. Socket Screw(M5*L10)	6
M-19	18048SW-3115	Spring Washer (@5)	16
M-20	16018SW-1111	Washer (@5)	16
M-21	20011PR-A001	Reflecting (1)	3
M-22	20009PR-A001	Reflecting (2)	2
M-24	20014ET-A001	Lamp Socket	8
M-25	GP-009003-00	Lamp Socket Fixed Plate	8
M-27	22025SC-9134	Screw (M4*L10)	12
M-28	09200100B000	Washer (Pvc)	12
M-29	20015PR-A001	Lamp Structure B	4
M-30	MH-40-26	Upper Therad Signal From J/B Cable	1
M-31	MH-38-26	Thread Board Power From J/B Cable	1
M-32	BD-000911-03	Thread Board (NC-GE)	18
M-33	04-0000-SW71	Thread Joint Board (NC-JT24)	1
M-34	MH-41-01	I/O Board To Thread Joint 40P	1
M-35	MH-39-26	Thread Joint To Thread B/D 2P	1
M-36	02060AD-AH21	Cable Cover (B)	1
M-37	02059AD-AH21	Cable Cover (C)	1
M-38	12000100BHI0	Cable Cover (D)	1
M-39	09000700B000	BALLAST	4
M-40	20009EL-B001	LAMP (32W)	4
M-41	12000200B000	CABLE COVER PLATE	2
M-42	02000400B000	CABLE COVER HOLDER	6

Ref. No	Part No.	Part Name	Q'ty

N X-Axis Drive System (Y-Stroke 1000 Below)

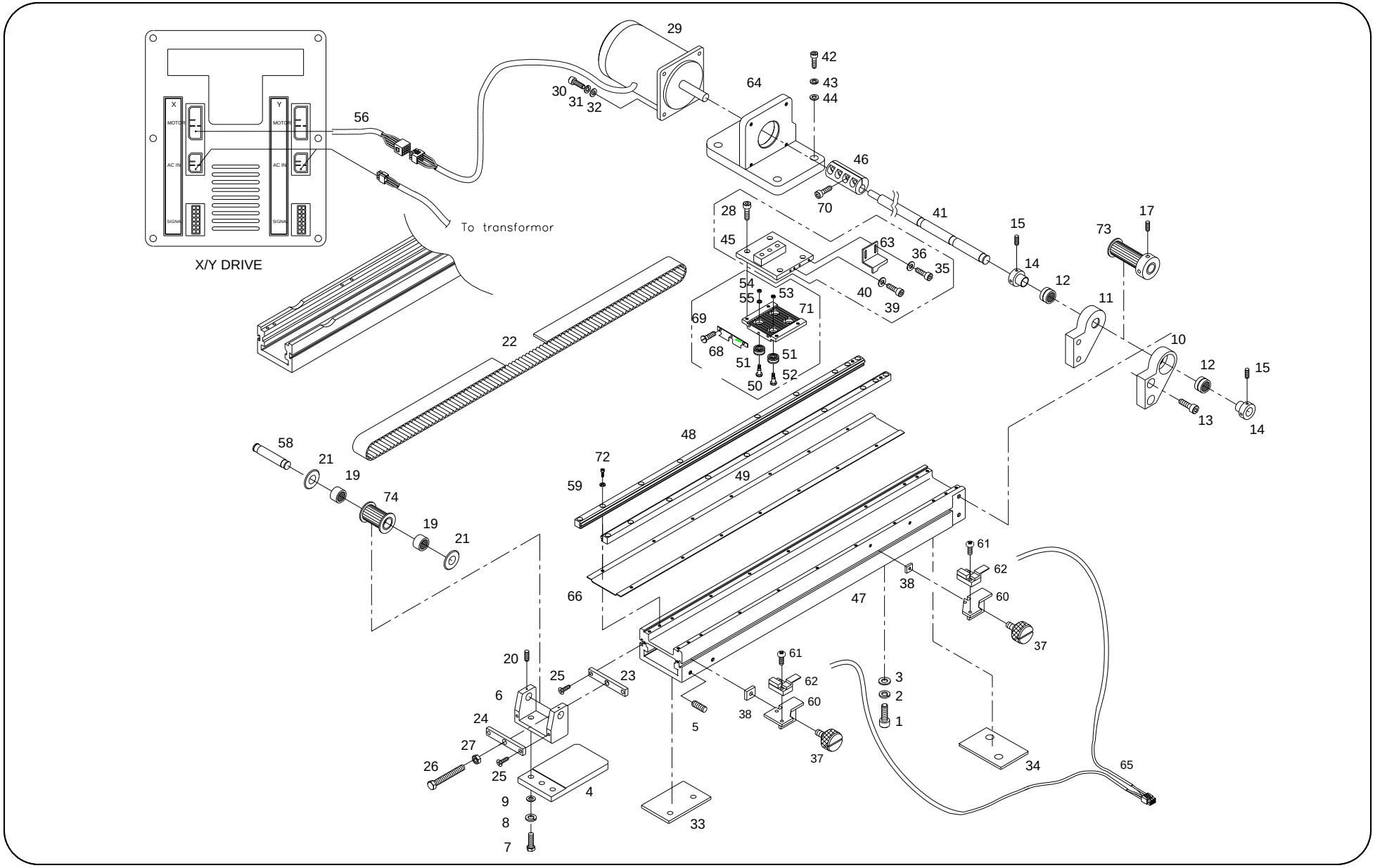

Ref.No	Part No.	Part Names	Q'ty
N-1	15017SC-4113	Hex. Socket Bolt (M8*L45)	12
	15019SC-4113	Hex. Socket Bolt (M8*L40)	12
N-2	15095SW-3115	Spring Washer (@8)	12
N-3	04029SW-A001	Stud Bolt Washer (@8)	12
N-4	04202400B000	Timing Pulley Tension Base	3
N-5	15090SC-B001	Hex.Socket Set Screw (M6*L10)	6
N-6	15027DC-A001	Timing Pulley Bracket (W)	3
N-7	15028SC-1111	Hex. Bolt (M6*L20)	6
N-8	03026SW-9115	Spring Washer (@6)	6
N-9	08057SW-1111	Washer (@6)	6
N-10	04103100B000	Timing Pulley Bracket (L)	3
N-11	04103200B000	Timing Pulley Bracket (R)	3
N-12	14065BR-A001	Needle Bearing (Nk18/16A)	6
N-13	14002SC-7113	Hex.Socket Bolt (M6*L15)	12
N-14	04003500B000	Needle Bearing Collar	6
N-15	04014SC-4517	Hex.Socket Set Screw(M5*L5)	12
N-17	14060AF-4517	Hex.Socket Screw(M6*L6)	12
N-19	15042BR-A001	Needle Bearing (1210zz)	6
N-20	03022SC-4517	Hex.Socket Screw (M4*L5)	6
N-21	15046RB-A001	Driving Pin Washer	6
N-22	15048BT-AC00	X-Driver Timing Belt (L1130)	3
	15048BT-AC30	X-Driver Timing Belt (L1730)	3
N-23	CP-007671-00	Tension Rivet Plate (W)	3
N-24	15056PR-A001	Tension Plate (W)	3
N-25	15089SC-7119	C.S Screw (M4*L12)	12
N-26	15058SC-1211	Hex. Bolt (M6*L58)	3
N-27	14064SN-7311	Hex.Nut (M6-No3)	3
N-28	15067SC-A001	Hex. Socket Bolt (M4*L7)	12
N-29	15095AF-A001	X-Axis Moter Unit	1
N-30	08087SC-7113	Hex. Socket Bolt (M8*L25)	6
N-31	15095SW-3115	Spring Washer (@8)	6
N-32	04029SW-A001	Stud Bolt Washer (@8)	6
N-33	15054PR-B001	L/M Guide Plate "A" (SPECIAL)	3
N-34	15055PR-B001	L/M Guide Plate "B"	3
N-35	07035SC-7113	Bracket Screw (M3*L6)	2
N-36	06011SW-2111	Washer (@3)	2
N-37	15120SC-A001	Position Adjusting Screw	2
N-38	15056PR-B001	Square Washer	2
N-39	07035SC-7113	Bracket Screw (M3*L6)	1
N-40	06011SW-2111	Washer (@3)	1

Ref. No	Part No.	Part Names	Q'ty
N-41	04000100B004	X-Axis Shaft (@15,L1025)	1
N-42	03003SC-4113	Hex. Socket Bolt "B"(M8*L32)	4
N-43	15095SW-3115	Spring Washer (@8)	4
N-44	08041SW-1111	Washer (@8-S)	4
N-45	04006900B000	X-Asix Feed Plate	3
N-46	03003810B000	Coupling	1
N-47	CP-007514-00	X Cam Roller Guide Frame (L=564)	3
	15010AD-BH11	X Cam Roller Guide Frame (L=964)	
N-48	15037AD-BH01	Cam Roller Guide Rail (L=564)	3
	15037AD-BH11	Cam Roller Guide Rail (L=973)	
N-49	15037AD-BH01	Cam Roller Guide Rail (L=564)	3
	15037AD-BH11	Cam Roller Guide Rail (L=973)	
N-50	15002CW-B001	Cam Roller Stud(A)	6
N-51	15001BR-B001	Cam Roller Baearing	12
N-52	15003CW-B001	Cam Roller Stud(B)	6
N-53	18048SW-3115	Spring Washer (5@)	6
N-54	18015SW-3111	Washer (4@-S)	6
N-55	18014SW-3115	Spring Washer (@4-No2)	6
N-56	25012EL-A001	Step Moter Driver X (25-12)	1
N-58	04104400B000	Timing Pulley Driving Pin "B"	3
N-59	02028SW-9115	Spring Washer (@4)	36
N-60	04000600F000	Perception Sensor Bracket X,Y	2
N-61	07018SC-8118	Plus Screw (M3*L8)	4
N-62	15046EL-CT01	Xy-Sensor Ass'Y (Tlp1204)	2
N-63	04000700B000	Perception Sensor Plate X	1
N-64	15103CA-B051	X-Axis Motor Bracket	1
N-65	02103000HDK2	X-Origin In	1
N-66	CP-007512-00	Guard Plate For Timming Belt (L=564)	3
	CP-007484-00	Guard Plate For Timming Belt (L=964)	
N-68	04000200B000	CAM ROLLER END SEAL B	6
N-69	03065SC-A001	GUARD PLATE SCREW	18
N-70	17039SC-4113	HEX. SOCKET BOLT (M6*L17)	4
N-71	04105100B000	X BELT CATCHER PLATE (B)	3
N-72	04016MC-4113	CAM ROLLER GUIDE FIXED SCREW	36
N-73	04001100B000	TIMING PULLEY C(18-S5M-32AF)	3
N-74	04600100B000	TIMING PULLEY D(18-S5M-32F)	3

N1 X-Axis Drive System (Y-Stroke 1200 Above)

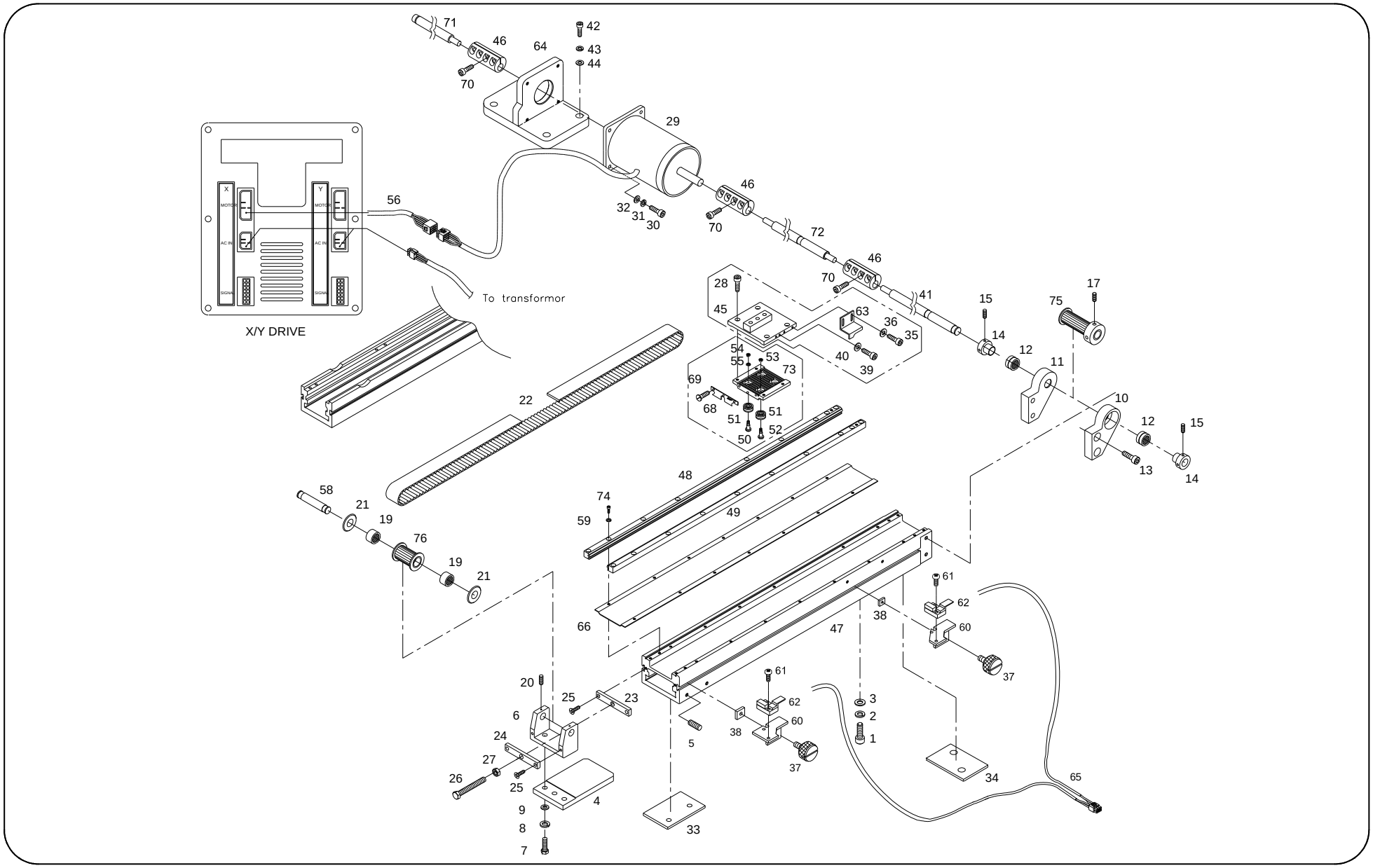

Ref.No	Part No.	Part Names	Q'ty
N1-1	15017SC-4113	Hex. Socket Bolt (M8*L45)	12
	15019SC-4113	Hex. Socket Bolt (M8*L40)	12
N1-2	15095SW-3115	Spring Washer (@8)	12
N1-3	04029SW-A001	Stud Bolt Washer (@8)	12
N1-4	04202400B000	Timing Pulley Tension Base	3
N1-5	15090SC-B001	Hex.Socket Set Screw (M6*L10)	6
N1-6	15027DC-A001	Timing Pulley Bracket (W)	3
N1-7	15028SC-1111	Hex. Bolt (M6*L20)	6
N1-8	03026SW-9115	Spring Washer (@6)	6
N1-9	08057SW-1111	Washer (@6)	6
N1-10	04103100B000	Timing Pulley Bracket (L)	3
N1-11	04103200B000	Timing Pulley Bracket (R)	3
N1-12	14065BR-A001	Needle Bearing (Nk18/16A)	6
N1-13	14002SC-7113	HEX.SOCKET BOLT (M6*L15)	12
N1-14	04003500B000	Needle Bearing Collar	6
N1-15	04014SC-4517	Hex.Socket Set Screw(M5*L5)	12
N1-17	14060AF-4517	Hex.Socket Screw(M6*L6)	12
N1-19	15042BR-A001	Needle Bearing (1210zz)	6
N1-20	03022SC-4517	Hex.Socket Screw (M4*L5)	6
N1-21	15046RB-A001	Driving Pin Washer	6
N1-22	15043BT-A101	BELT	3
N1-23	CP-007671-00	Tension Rivet Plate (W)	3
N1-24	15056PR-A001	Tension Plate (W)	3
N1-25	15089SC-7119	C.S SCREW (M4*L10)	12
N1-26	15058SC-1211	Hex. Bolt (M6*L58)	3
N1-27	14064SN-7311	HEX.NUT (M6-NO3)	3
N1-28	15067SC-A001	Hex. Socket Bolt (M4*L7)	12
N1-29	15099AF-A001	X-Axis Moter Unit Y-Axis 모터 공용	1
N1-30	08087SC-7113	HEX. SOCKET BOLT (M8*L25)	6
N1-31	15095SW-3115	SPRING WASHER (@8)	6
N1-32	04029SW-A001	Stud Bolt Washer (@8)	6
N1-33	15054PR-B001	L/M Guide Plate "A" (SPECIAL)	3
N1-34	15055PR-B001	L/M Guide Plate "B"	3
N1-35	07035SC-7113	BRACKET SCREW (M3*L6)	2
N1-36	06011SW-2111	Washer (@3)	2
N1-37	15120SC-A001	Position Adjusting Screw	2
N1-38	15056PR-B001	Square Washer	2
N1-39	07035SC-7113	BRACKET SCREW (M3*L6)	1
N1-40	06011SW-2111	Washer (@3)	1
N1-41		X-Axis Shaft A (@15)	1

Ref. No	Part No.	Part Names	Q'ty
N1-42	03003SC-4113	Hex. Socket Bolt "B"(M8*L32)	4
N1-43	15095SW-3115	Spring Washer (@8)	4
N1-44	08041SW-1111	Washer (@8-S)	4
N1-45	04006900B000	X-Asix Feed Plate	3
N1-46	03003810B000	Coupling	3
N1-47	15010AD-BH01	X CAM ROLLER GUIDE FRAME	3
N1-48	15037AD-BH01	CAM ROLLER GUIDE RAIL (L=564)	3
N1-49	15037AD-BH01	CAM ROLLER GUIDE RAIL (L=564)	3
N1-50	15002CW-B001	Cam Roller Stud (A)	6
N1-51	15001BR-B001	Cam Roller Baearing	12
N1-52	15003CW-B001	Cam Roller Stud (B)	6
N1-53	18048SW-3115	Spring Washer (5@)	6
N1-54	18015SW-3111	Washer (4@-S)	6
N1-55	18014SW-3115	Spring Washer (@4-No2)	6
N1-56	25012EL-A001	Step Moter Driver X (25-12)	1
N1-58	04104400B000	Timing Pulley Driving Pin "B"	3
N1-59	02028SW-9115	Spring Washer (@4)	36
N1-60	04000600F000	Perception Sensor Bracket X,Y	2
N1-61	07018SC-8118	Plus Screw (M3*L8)	4
N1-62	15046EL-CT01	Xy-Sensor Ass'Y (Tlp1204)	2
N1-63	04000700B000	Perception Sensor Plate X	1
N1-64	15103CA-B051	X-Axis Motor Bracket	1
N1-65	02103000HDK2	X-Origin In	1
N1-66	CP-007512-00	X BELT CATCHER PLATE (B)	3
N1-68	04000200B000	CAM ROLLER END SEAL B	6
N1-69	03065SC-A001	GUARD PLATE SCREW	18
N1-70	17039SC-4113	HEX. SOCKET BOLT (M6*L17)	12
N1-71	04000200B009	X-Axis Shaft B (@15)	1
N1-72	04000300B009	X-Axis Shaft C	1
N1-73	04105100B000	X BELT CATCHER PLATE (B)	3
N1-74	04016MC-4113	CAM ROLLER GUIDE FIXED SCREW	36
N1-75	04001100B000	TIMING PULLEY C(18-S5M-32AF)	3
N1-76	04600100B000	TIMING PULLEY D(18-S5M-32F)	3

Y-Axis Drive System(Y-Stroke 1000 Below)

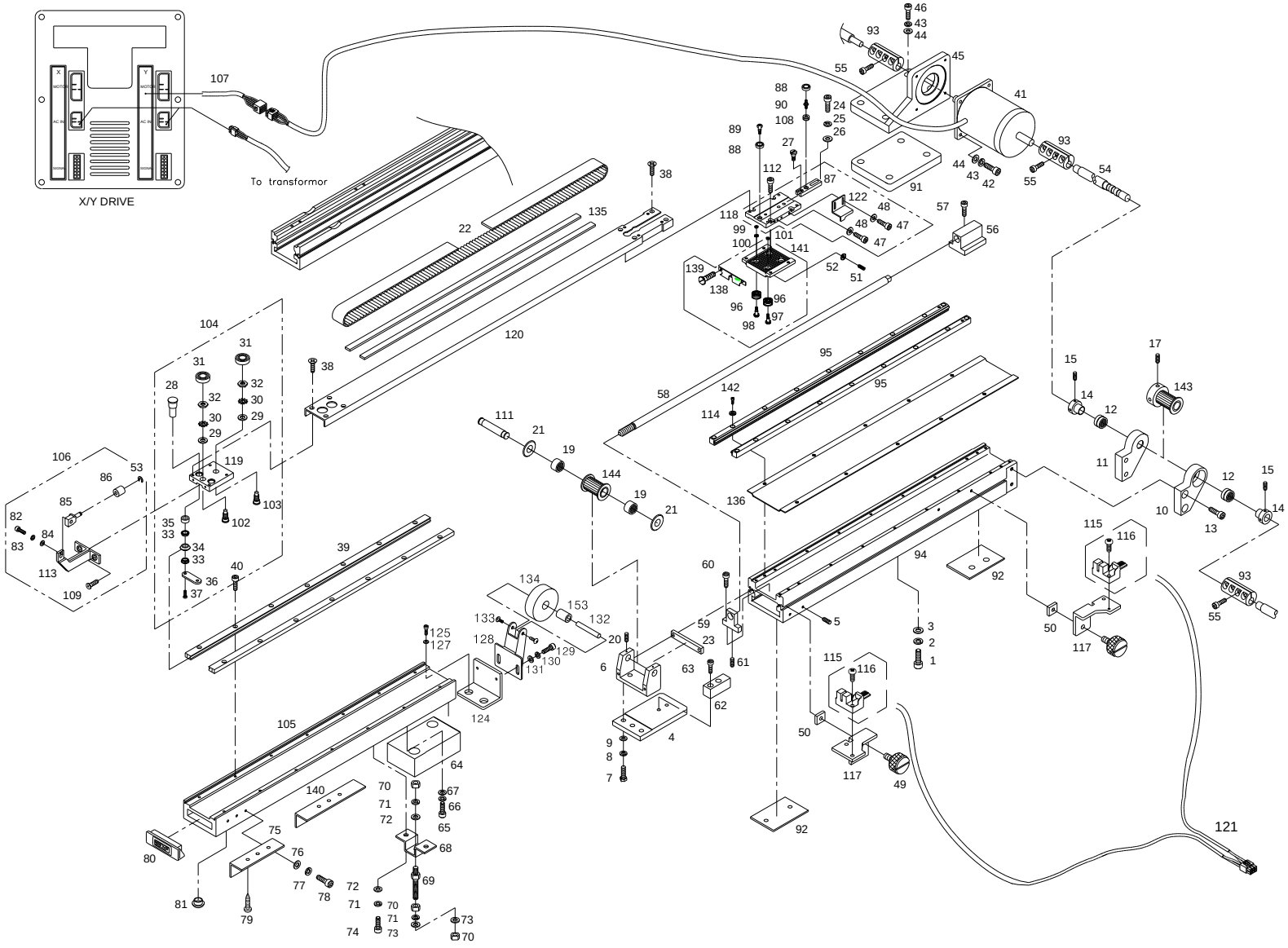

Ref.No	Part No.	Part Names	Q'ty
O-1	15017SC-4113	Hex. Socket Bolt (M8*L45)	16
	15019SC-4113	Hex. Socket Bolt (M8*L40)	16
O-2	15095SW-3115	Spring Washer (@8)	16
O-3	04029SW-A001	Stud Bolt Washer (@8)	16
O-4	04302300B000	Timing Pulley Tension Base(N) (Belt:35)	2
	04202400B000	Timing Pulley Tension Base	2
O-5	15090SC-B001	Hex.Socket Set Screw (M6*L10)	8
O-6	15026DC-A001	Timing Pulley Tension Bracket (N)	2
	15027DC-A001	Timing Pulley Bracket (W)	2
O-7	15028SC-1111	Hex. Bolt (M6*L20)	12
O-8	03026SW-9115	Spring Washer (@6)	12
O-9	08057SW-1111	Washer (@6)	12
O-10	04103100B000	Timing Pulley Bracket (L)	4
O-11	04103200B000	Timing Pulley Bracket (R)	4
O-12	14065BR-A001	Needle Bearing (Nk18/16A)	8
O-13	14002SC-7113	Hex.Socket Bolt (M6*L15) (SPECIAL)	16
O-14	04003500B000	Needle Bearing Collar	8
O-15	04014SC-4517	Hex.Socket Set Screw(M5*L5)	24
O-17	14060AF-4517	Hex.Socket Screw(M6*L6)	16
O-19	15042BR-A001	Needle Bearing (1210zz)	8
O-20	03022SC-4517	Hex.Socket Screw (M4*L5)	8
O-21	15046RB-A001	Driving Pin Washer	8
O-22	15050BT-A021	Y-Drive Timing Belt "A" 5M*L1865 (W:35)	2
	15051BT-A021	Y-Drive Timing Belt "B" 5M*L1865 (W:48)	2
O-23	15055PR-A001	Tension Rivet Plate (W)	2
O-24	03016SC-4113	Hex. Socket Bolt (M5*L15)	8
O-25	18048SW-3115	Spring Washer (@5)	8
O-26	WS-000083-00	@5 - Washer	8
O-27	15074SC-A001	Stopper Stud	4
O-28	15076CW-A031	Rail Guide Pin "C' (L19.1)	4
O-29	15077SW-2111	Washer (@8)	8
O-30	15078SW-8113	Tooghed Lock Washer (@8)	8
O-31	15077BR-B001	Ball Bearing (Lr606Nppu)	8
O-32	15079SN-2311	Rail Guide Shaft Nut	8
O-33	15106BR-A001	Flange Bearing (1280Zz)	16
O-34	15130AF-A001	Roller Guide	8
O-35	15092CW-A031	Stopper Washer	8
O-36	15137PR-A001	Rail Guide Shaft Bracket	4
O-37	05028SC-A001	Holder Screw	8
O-38	15084SC-7119	C.S Screw (M4*L6)	32
O-39	15104AF-A021	Y-Axis Rail Guide	8

Ref. No	Part No.	Part Names	Q'ty
O-40	02015SC-7113	Hex. Socket Bolt (M4*L10)	56
O-41	15099AF-A001	Y-Axis Motor (103H-89583-8018)	1
O-42	03003SC-4113	Hex. Socket Bolt "B"(M8*L35)	4
O-43	15095SW-3115	Spring Washer (@8)	4
O-44	04029SW-A001	Stud Bolt Washer (@8)	4
O-45	15103CA-A001	Y-Axis Motor Bracket	1
O-46	14027SC-4113	Hex.Socket Bolt (M8*L30)	4
O-47	07035SC-7113	Bracket Screw (M3*L6)	2
O-48	06011SW-2111	Washer (@3)	2
O-49	15120SC-A001	Position Adjusting Screw	2
O-50	15056PR-B001	Square Washer	4
O-51	07035SC-7113	Bracket Screw (M3*L6)	2
O-52	06011SW-2111	Washer (@3)	1
O-53	15159SR-4013	E-Ring (3@)	4
O-54	17030SH-AC20	Y-Drive Shaft "A" (L1773.75)	1
	17034SH-AC20	Y-Drive Shaft "B" (L880.25)	1
	17038SH-AC20	Y-Drive Shaft "C" (L1773.75)	1
	17042SH-AC20	Y-Drive Shaft "D" (L803.95)	1
O-55	08091SC-7113	Hex. Socket Bolt (M6*L20)	16
O-56	04200500B000	Y Adjusting Shaft Guide (B)	4
O-57	16059SC-7113	Hex.Socket Bolt (M6*L12)	16
O-58	15033CW-B001	Y-Adjusting Shaft	4
O-59	04200400B000	Y Adjusting Shaft Guide (A)	4
O-60	16059SC-7113	Hex.Socket Bolt (M6*L12)	8
O-61	14061AF-4517	Hex.Socket Set Screw (M8*L8)	4
O-62	04200600B000	Adjusting Shaft Stopper	4
O-63	14006SC-7113	Hex.Socket Set Screw(M8*L15)	8
O-64	15095AD-B001	Spacer	4
O-65	15020SC-4113	Hex. Socket Bolt (M8X150)	8
O-66	15095SW-3115	Spring Washer (@8)	8
O-67	08041SW-1111	Washer (@8-S)	8
O-68	15097PR-B001	Stud Bracket	4
O-69	15096CW-B001	Stud Bolt	4
O-70	04032SN-A001	Hex. Nut (M8)	4
O-71	15095SW-3115	Spring Washer (@8)	4
O-72	08041SW-1111	Washer (@8-S)	4
O-73	04029SW-A001	Stud Bolt Washer (@8)	4
O-74	14006SC-7113	Hex.Socket Set Screw(M8*L15)	8
O-75	15093AD-B001	Table Support	16
O-76	18048SW-3115	Spring Washer (5@)	48
O-77	18049SW-3111	Washer (@5)	45

Y-Axis Drive System(Y-Stroke 1000 Below)

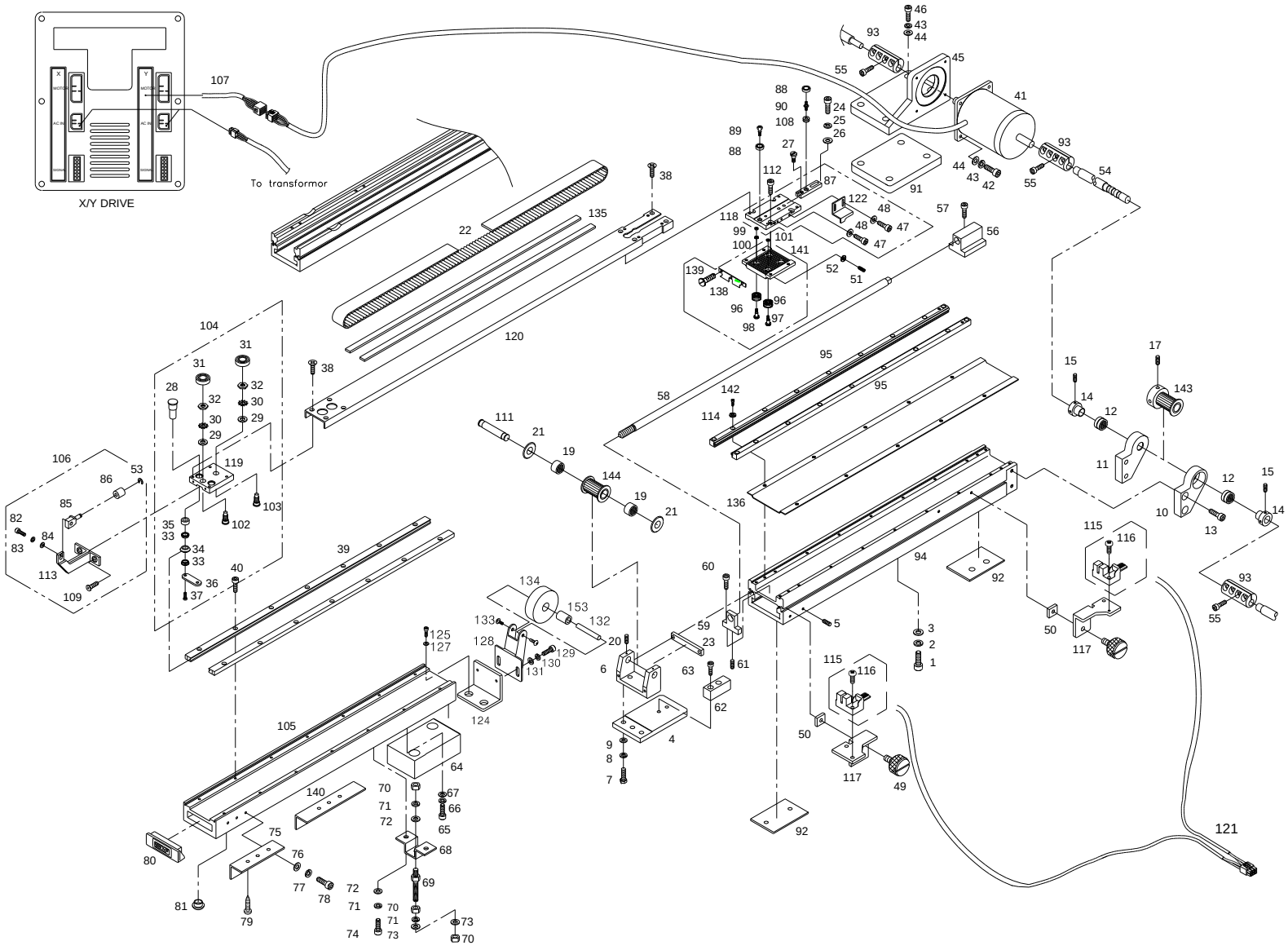

Ref.No	Part No.	Part Names	Q'ty
O-78	18047SC-7113	Hex. Socket Bolt (M5*L15)	48
O-79	16010SC-8330	Tapping Screw (M6*L25)	48
O-80	15092RB-B001	Rubber Cap (A)	4
O-81	15091RB-A001	Rubber Cap (B)	4
O-82	02023SC-7113	Hex. Socket Bolt (M4*L8)	4
O-83	02028SW-9115	Spring Washer (@4)	4
O-84	05009SW-1111	Washer(@4)	4
O-85	10507400B000	Roller Position Adjusting Pin	4
O-86	15133CW-B001	Roller	4
O-87	GP-006299-00	ADJUSTING BLOCK FOR BEARING	4
O-88	15077BR-B001	Ball Bearing (Lr606Nppu)	8
O-89	15097CW-A001	Rail Guide Pin "A"	4
O-90	15098CW-A001	Rail Guide Pin "B"	4
O-91	15106PR-A001	A Support Plate "A" (T:2)	4
O-92	15112PR-A001	L/M Guide Plate "A-2"	8
O-93	03003810B000	Coupling	4
O-94	15022AD-B021	Y Cam Roller Guide Bracket A (L833)	2
	15026AD-B021	Y Cam Roller Guide Bracket B (L833)	2
O-95	15030AD-B021	Y Cam Roller Guide Rail (L833)	8
O-96	15001BR-B001	Cam Roller Baearing	16
O-97	15003CW-B001	Cam Roller Stud (B)	8
O-98	15002CW-B001	Cam Roller Stud (A)	8
O-99	16018SW-1111	Washer (@5)	16
O-100	18048SW-3115	Spring Washer (@5)	16
O-101	18015SW-3111	Washer (4@-S)	16
O-102	15074CW-B001	Rail Guide Pin "A"	8
O-103	15075CW-B001	Rail Guide Pin "B"	8
O-104	15071BM-A001	V-Roller Guide Set	4
O-105	CP-007483-00	V-Rail Bracket	4
O-106	15134BM-B001	Roller Bracket Ass'Y	4
O-107	25014EL-AF00	Step Motor Driver Y (25-14)	1
O-108	18111CW-B001	Frame "E" Roller	1
O-109	02002SC-7119	Pluss Screw (M4*L8)	8
O-111	04104300B000	Timing Pulley Driving Pin "A" (Belt:35)	2
	04104400B000	Timing Pulley Driving Pin "B" (Belt:48)	2
O-112	15067SC-A001	Hex. Socket Bolt (M4*L7)	16
O-113	08000700B000	Bracket	4
O-114	02028SW-9115	Spring Washer (@4)	32
O-115	15046EL-CT01	Xy-Sensor Ass'Y (Tlp1204)	2
O-116	07018SC-8118	Plus Screw (M3*L8)	4
O-117	04000600F000	Perception Sensor Bracket X,Y	2

Ref. No	Part No.	Part Names	Q'ty
O-118	04200010B000	Y-Axis Feed Plate (C)	4
O-119	08400010B000	Y-Axis Feed Plate "D"	4
O-120	08000600B004	Connection Cover "C" (L1104.2)	4
O-121	02103100HDK2	Y-Origin In	1
O-122	04000800B000	Perception Sensor Plate Y	1
O-124	GP-013196-00	Support Bracket	4
O-125	14006SC-4113	Hex. Socket Bolt (M8*L15)	8
O-127	15077SW-2111	Washer (@8)	8
O-128	GP-006914-02	Roller Bracket	4
O-129	02023SC-7113	Hex. Socket Bolt (M4*L8)	8
O-130	02028SW-9115	Spring Washer (@4)	8
O-131	05009SW-1111	Washer(@4)	8
O-132	PN-000133-00	Roller Pin	4
O-133	09005SC-3123	Truss Screw (M3*L6)	8
O-134	GP-006917-01	Guide Roller	4
O-135	18062SF-A001	Y-Axis Sash (L) Felt	8
O-136	04300100B004	Guard Plate For Trimming Belt A	2
	04200100B004	Guard Plate For Trimming Belt B	2
O-138	04000100B000	Cam Roller End Seal "A"	4
	04000200B000	Cam Roller End Seal "B"	4
O-139	03065SC-A001	Guard Plate Screw	24
O-140	15094AD-B001	Table Support	8
O-141	04304900B000	Belt CATCHER PLATE (A)	2
	04205000B000	Belt CATCHER PLATE (B)	2
O-142	04016MC-4113	CAM ROLLER GUIDE FIXED SCREW	32
O-143	04001000B000	TIMING PULLEY A(18-S5M-32AF)	2
	04001100B000	TIMING PULLEY C(18-S5M-32AF)	2
O-144	04500200B000	TIMING ULLEY B(18-S5M-32F)	2
	04600100B000	TIMING PULLEY D(18-S5M-32F)	2
O-145	GP-006918-00	Guide Roller Bushing	4

01 Y-Axis Drive System(Y-Stroke 1200 Above)

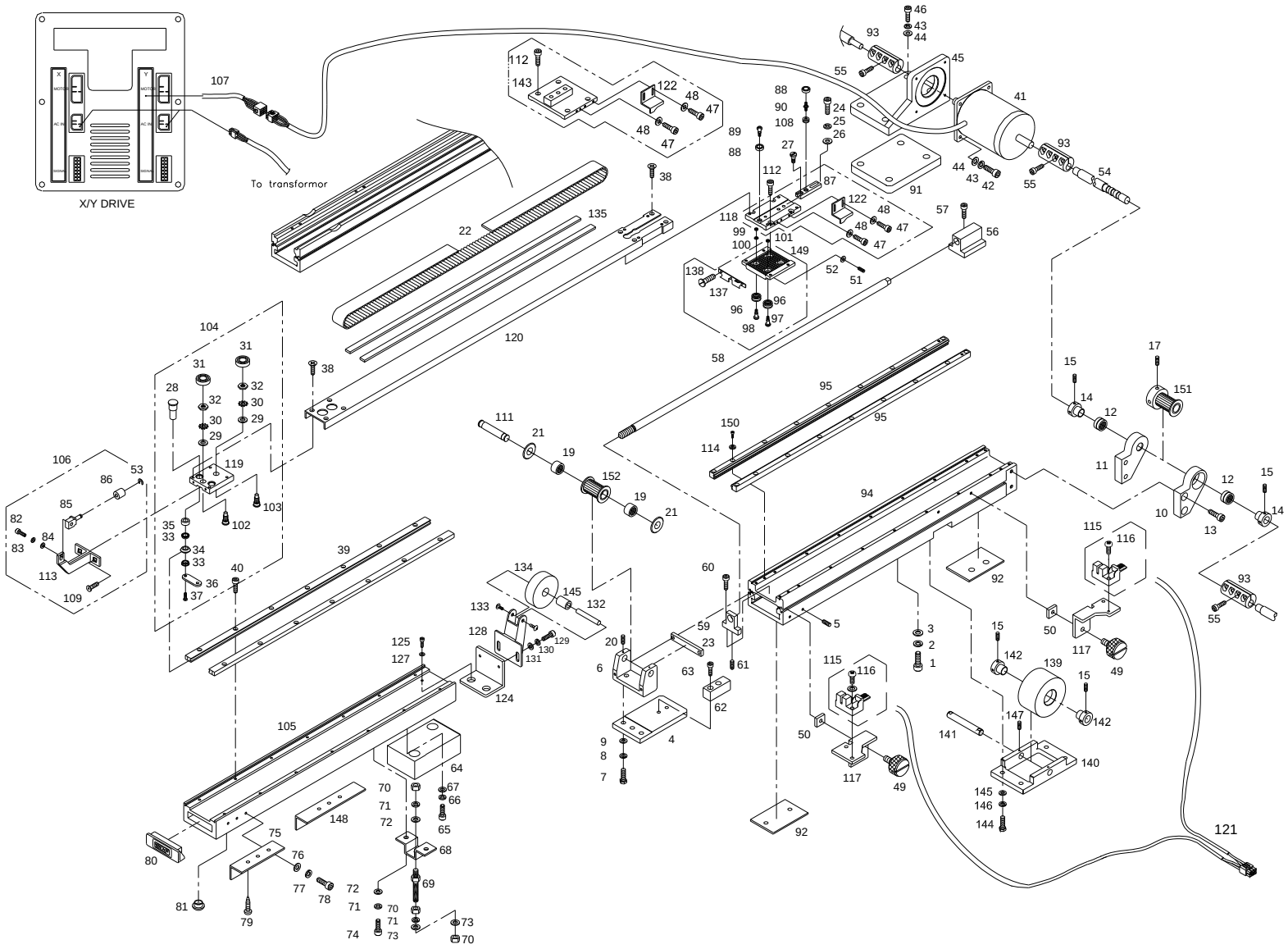

Ref.No	Part No.	Part Name	Q'ty
O1-1	15017SC-4113	Hex. Socket Bolt (M8*L45)	16
	15019SC-4113	Hex. Socket Bolt (M8*L40)	16
O1-2	15095SW-3115	SPRING WASHER (@8)	16
O1-3	04029SW-A001	Stud Bolt Washer (@8)	16
O1-4	04302300B000	Timing Pulley Tension Base(N) (Belt:35)	2
	04202400B000	Timing Pulley Tension Base	4
O1-5	15090SC-B001	Hex.Socket Set Screw (M6*L10)	8
O1-6	15026DC-A001	Timing Pulley Tension Bracket (N)	2
	15027DC-A001	Timing Pulley Bracket (W)	4
O1-7	15028SC-1111	Hex. Bolt (M6*L20)	21
O1-8	03026SW-9115	Spring Washer (@6)	18
O1-9	08057SW-1111	Washer (@6)	18
O1-10	04103100B000	Timing Pulley Bracket (L)	6
O1-11	04103200B000	Timing Pulley Bracket (R)	6
O1-12	14065BR-A001	Needle Bearing (Nk18/16A)	12
O1-13	14002SC-7113	HEX.SOCKET BOLT (M6*L15) (SPECIAL)	24
O1-14	04003500B000	Needle Bearing Collar	12
O1-15	04014SC-4517	Hex.Socket Set Screw(M5*L5)	24
O1-17	14060AF-4517	Hex.Socket Screw(M6*L6)	16
O1-19	15042BR-A001	Needle Bearing (1210zz)	12
O1-20	03022SC-4517	Hex.Socket Screw (M4*L5)	12
O1-21	15046RB-A001	Driving Pin Washer	12
O1-22	04000700B009	Y-Drive Timing Belt "A"	2
	04000800B009	Y-Drive Timing Belt "B	4
O1-23	15055PR-A001	Tension Rivet Plate (W)	2
O1-24	03016SC-4113	Hex. Socket Bolt (M5*L15)	8
O1-25	18048SW-3115	SPRING WASHER (5@)	8
O1-26	WS-000083-00	@5 - Washer	8
O1-27	15074SC-A001	Stopper Stud	4
O1-28	15076CW-A031	Rail Guide Pin "C' (L19.1)	4
O1-29	15077SW-2111	Washer (@8)	8
O1-30	15078SW-8113	Tooghed Lock Washer (@8)	8
O1-31	15077BR-B001	Ball Bearing (Lr606Nppu)	8
O1-32	15079SN-2311	Rail Guide Shaft Nut	8
O1-33	15106BR-A001	Flange Bearing (1280Zz)	16
O1-34	15130AF-A001	Roller Guide	8
O1-35	15092CW-A031	Stopper Washer	8
O1-36	15137PR-A001	Rail Guide Shaft Bracket	4
O1-37	05028SC-A001	Holder Screw	8
O1-38	15084SC-7119	C.S SCREW (M4*L6)	32
O1-39	08000100B009	Y-Axis Rail Guide	8

Ref. No	Part No.	Part Name	Q'ty
O1-40	02015SC-7113	HEX.SOCKET BOLT(M4*L10)	112
O1-41	15099AF-A001	Y-Axis Motor (103H-89583-8018)	1
O1-42	03003SC-4113	Hex. Socket Bolt "B"(M8*L35)	4
O1-43	15095SW-3115	Spring Washer (@8)	4
O1-44	04029SW-A001	Stud Bolt Washer (@8)	4
O1-45	15103CA-A001	Y-Axis Motor Bracket	1
O1-46	14027SC-4113	Hex.Socket Bolt (M8*L30)	4
O1-47	07035SC-7113	Bracket Screw (M3*L6)	2
O1-48	06011SW-2111	Washer (@3)	2
O1-49	15120SC-A001	Position Adjusting Screw	2
O1-50	15056PR-B001	Square Washer	4
O1-51	07035SC-7113	Bracket Screw (M3*L6)	2
O1-52	06011SW-2111	Washer (@3)	1
O1-53	15159SR-4013	E-Ring (3@)	4
O1-54	04001000B009	Y-DRIVE SHAFT "A"	2
	04001000B009	Y-DRIVE SHAFT "A"	1
	04001200B009	Y-DRIVE SHAFT "D"	1
	04001300B009	Y-DRIVE SHAFT "E"	1
	04001400B009	Y-DRIVE SHAFT "F"	1
O1-55	08091SC-7113	Hex. Socket Bolt (M6*L20)	16
O1-56	04200500B000	Y Adjusting Shaft Guide (B)	6
O1-57	16059SC-7113	HEX.SOCKET BOLT (M6*L12)	24
O1-58	04000900B009	Y-Adjusting Shaft	6
O1-59	04200400B000	Y Adjusting Shaft Guide (A)	6
O1-60	16059SC-7113	Hex.Socket Bolt (M6*L12)	12
O1-61	14061AF-4517	Hex.Socket Set Screw (M8*L8)	6
O1-62	04200600B000	Adjusting Shaft Stopper	4
O1-63	14006SC-7113	HEX.SOCKET SET SCREW(M8*L15)	12
O1-64	15095AD-B001	Spacer	4
O1-65	15020SC-4113	Hex. Socket Bolt (M8X150)	8
O1-66	15095SW-3115	SPRING WASHER (@8)	8
O1-67	08041SW-1111	Washer (@8-S)	8
O1-68	15097PR-B001	Stud Bracket	4
O1-69	15096CW-B001	Stud Bolt	4
O1-70	04032SN-A001	Hex. Nut (M8)	4
O1-71	15095SW-3115	SPRING WASHER (@8)	4
O1-72	08041SW-1111	Washer (@8-S)	4
O1-73	04029SW-A001	Stud Bolt Washer (@8)	4
O1-74	14006SC-7113	Hex.Socket Set Screw(M8*L15)	12
O1-75	15093AD-B001	Table Support	16
O1-76	18048SW-3115	Spring Washer (5@)	72

01 Y-Axis Drive System(Y-Stroke 1200 Above)

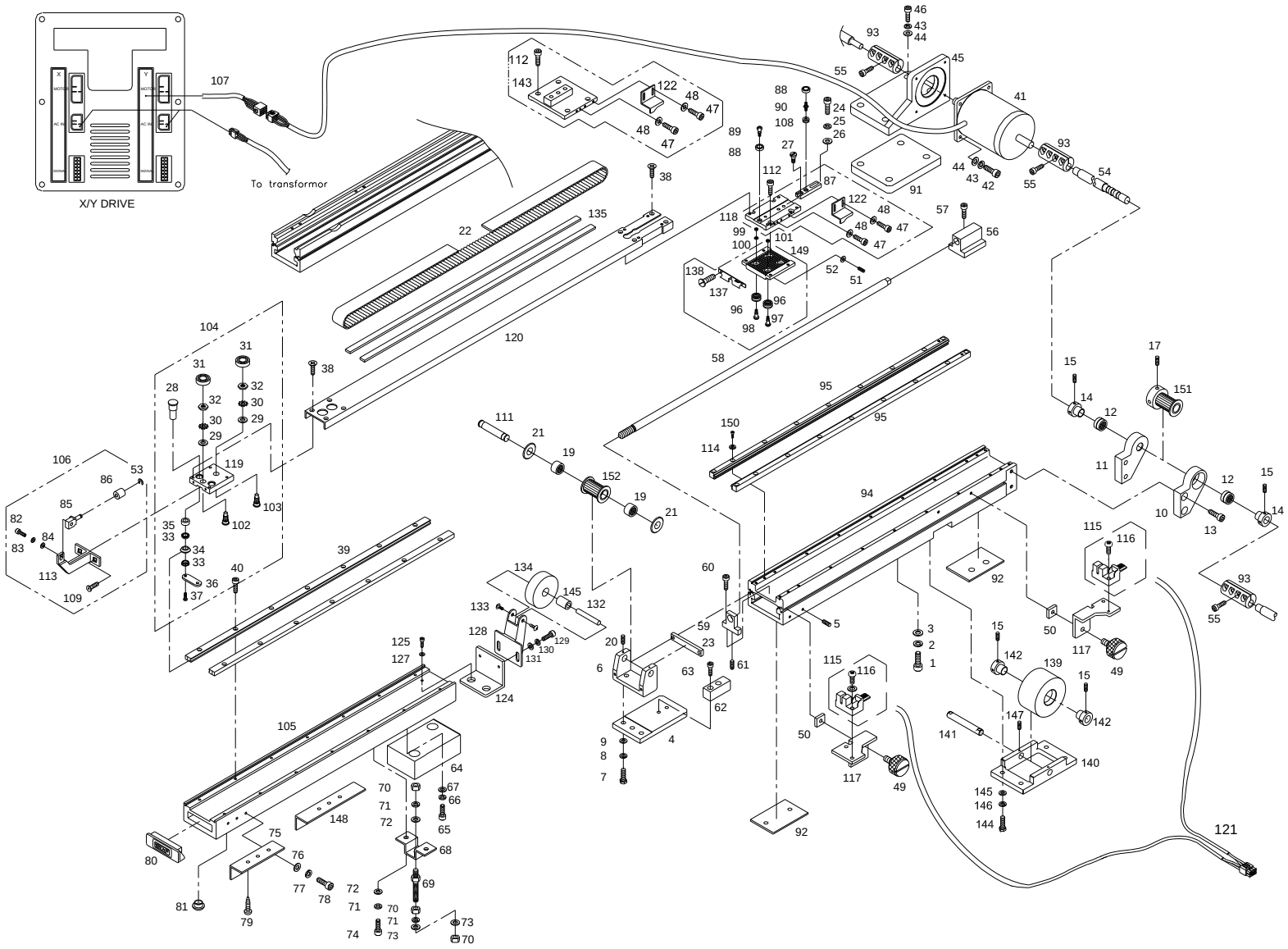

Ref.No	Part No.	Part Name	Q'ty
O1-77	18049SW-3111	Washer (@5)	72
O1-78	18047SC-7113	Hex. Socket Bolt (M5*L15)	72
O1-79	16010SC-8330	Tapping Screw (M6*L25)	72
O1-80	15092RB-B001	Rubber Cap (A)	4
O1-81	15091RB-A001	Rubber Cap (B)	4
O1-82	02023SC-7113	Hex. Socket Bolt (M4*L8)	4
O1-83	02028SW-9115	Spring Washer (@4)	4
O1-84	05009SW-1111	Washer(@4)	4
O1-85	10507400B000	Roller Position Adjusting Pin	4
O1-86	15133CW-B001	Roller	4
O1-87	GP-006299-00	ADJUSTING BLOCK FOR BEARING	4
O1-88	15077BR-B001	Ball Bearing (Lr606Nppu)	8
O1-89	15097CW-A001	Rail Guide Pin "A"	4
O1-90	15098CW-A001	Rail Guide Pin "B"	4
O1-91	15106PR-A001	A Support Plate "A" (T:2)	2
O1-92	15112PR-A001	L/M Guide Plate "A-2"	12
O1-93	03003810B000	Coupling	4
O1-94	04000500B009	Y Cam Roller Guide Bracket A (L=1299)	2
	04000400B009	Y Cam Roller Guide Bracket B (L=1299)	4
O1-95	04000600B009	Y Cam Roller Guide Rail	12
O1-96	15001BR-B001	Cam Roller Baearing	24
O1-97	15003CW-B001	Cam Roller Stud (B)	12
O1-98	15002CW-B001	Cam Roller Stud (A)	12
O1-99	16018SW-1111	Washer (@5)	24
O1-100	18048SW-3115	Spring Washer (@5)	24
O1-101	18015SW-3111	Washer (4@-S)	24
O1-102	15074CW-B001	Rail Guide Pin "A"	4
O1-103	15075CW-B001	Rail Guide Pin "B"	4
O1-104	15071BM-A001	V-Roller Guide Set	4
O1-105	CP-007483-00	V-Rail Bracket	4
O1-106	15134BM-B001	Roller Bracket Ass'Y	4
O1-107	25014EL-AF00	Step Motor Driver Y (25-14)	1
O1-108	18111CW-B001	Frame "E" Roller	4
O1-109	02002SC-7119	Pluss Screw (M4*L8)	8
O1-111	04104300B000	Timing Pulley Driving Pin "A" (Belt:35)	2
	04104400B000	Timing Pulley Driving Pin "B" (Belt:48)	4
O1-112	15067SC-A001	Hex. Socket Bolt (M4*L7)	16
O1-113	08000700B000	Bracket	4
O1-114	02028SW-9115	Spring Washer (@4)	180
O1-115	15046EL-CT01	Xy-Sensor Ass'Y (Tlp1204)	2
O1-116	07018SC-8118	Plus Screw (M3*L8)	4
O1-117	04000600F000	Perception Sensor Bracket X,Y	2

Ref. No	Part No.	Part Name	Q'ty
O1-118	04200010B000	Y-Axis Feed Plate (C)	6
O1-119	08400010B000	Y-Axis Feed Plate "D"	4
O1-120	08000300B009	Connection Cover "C" (L=1554.2)	4
O1-121	02103000HDK2	X-ORIGINAL IN	1
O1-122	04000800B000	Perception Sensor Plate Y	1
O1-124	GP-013196-00	ROLLER BRACKET SUPPORT	4
O1-125	14006SC-4113	Hex. Socket Bolt (M8*L15)	8
O1-127	15077SW-2111	Washer (@8)	8
O1-128	GP-006914-02	Roller Bracket	4
O1-129	02023SC-7113	Hex. Socket Bolt (M4*L8)	8
O1-130	02028SW-9115	Spring Washer (@4)	8
O1-131	05009SW-1111	Washer(@4)	8
O1-132	PN-000133-00	Roller Pin	4
O1-133	09005SC-3123	Truss Screw (M3*L6)	8
O1-134	GP-006917-01	Guide Roller	4
O1-135	18062SF-A001	Y-Axis Sash (L) Felt	8
O1-137	04000100B000	Cam Roller End Seal "A"	4
	04000200B000	Cam Roller End Seal "B"	3
O1-138	03065SC-A001	Guard Plate Screw	36
O1-139	04001700B009	Idler (A)	4
	04002100B009	Idler (B)	2
O1-140	04001900B009	Idler Base (A)	4
	04002000B009	Idler Base (B)	2
O1-141	04001800B009	Idler Shaft (A)	4
	04002000B009	Idler Shaft (B)	2
O1-142	03002700T000	Bearing Collar	12
O1-143	04202400B000	Y-Axis Feed Plate	4
O1-144	18014SC-7113	Hex. Socket Bolt (M4*L9)	12
O1-145	08057SW-1111	Washer (@6)	24
O1-146	03026SW-9115	Spring Washer (@6)	24
O1-147	14046SC-7113	Hex. Socket Bolt (M6*L30)	24
O1-148	15094AD-B001	Table Support(B)	8
O1-149	04304900B000	BELT CATCHER PLATE (A)	2
	04205000B000	BELT CATCHER PLATE (B)	4
O1-150	04016MC-4113	CAM ROLLER GUIDE FIXED SCREW	180
O1-151	04001000B000	TIMING PULLEY A(18-S5M-32AF)	2
	04001100B000	TIMING PULLEY C(18-S5M-32AF)	4
O1-152	04500200B000	TIMING ULLEY B(18-S5M-32F)	2
	04600100B000	TIMING PULLEY D(18-S5M-32F)	4
O-153	GP-006918-00	Guide Roller Bushing	4

P

Bar Switch

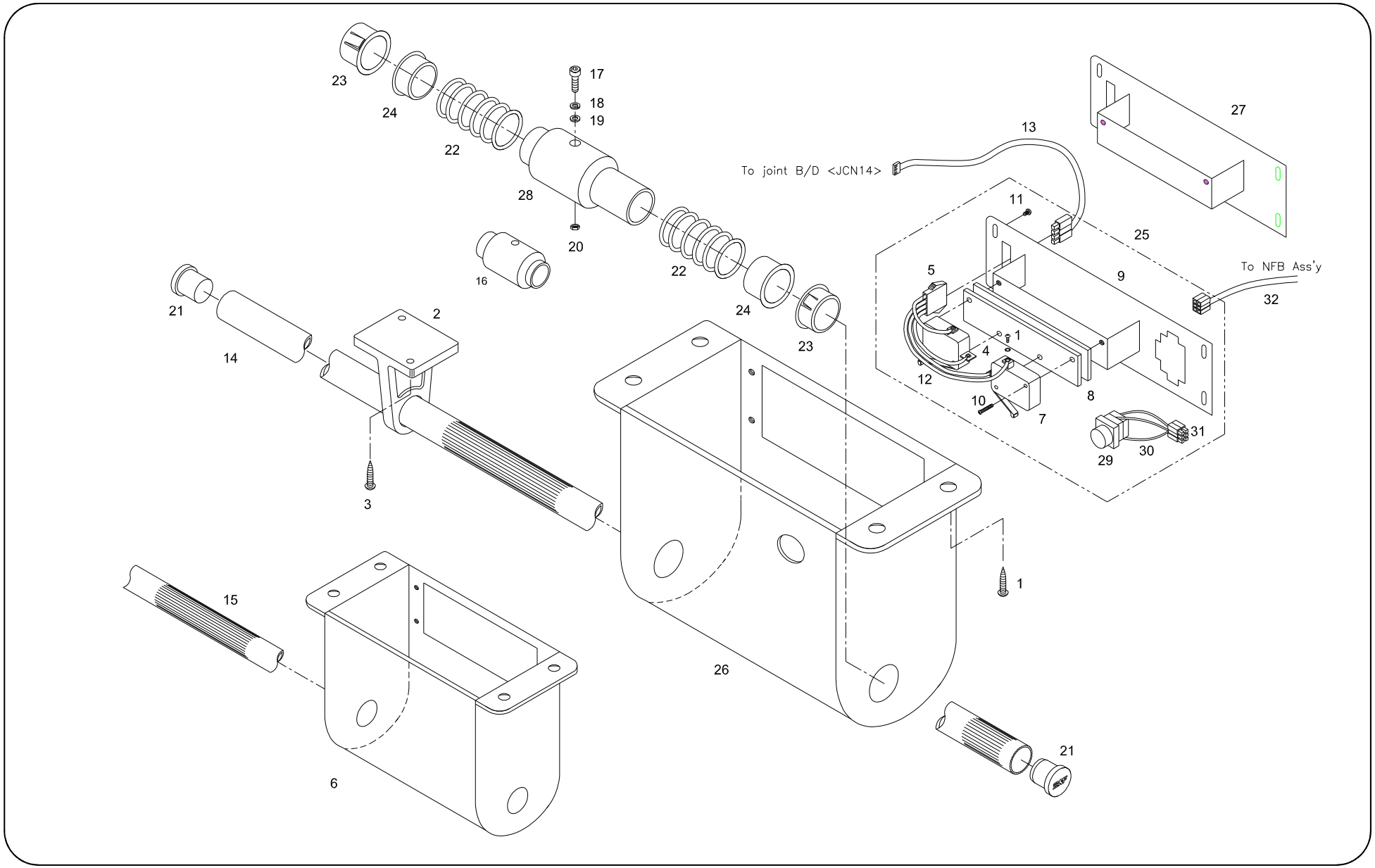
23
24
22
17
18
19
28
20
16
22
24
23
21
14
2
3
15
6
26
1
21
13
To joint B/D <JCN14>
27
11
25
9
To NFB Ass'y
32
5
1
4
12
10
7
8
31
29
30

SWF/GE-Series

Ref.No	Part No.	Part Names	Q'ty
P-1	19002SC-1330	Tapping Screw (M4*L16)	4
P-2	19018PM-A001	Bar S/W Support	6
P-3	19002SC-1330	Tapping Screw (M4*L16)	12
P-4	06011SW-2111	Washer (@3)	4
P-5	19020EL-A001	Connector (A/S)	1
P-6	19001PR-B001	Bar Switch Box	1
P-7	19003EL-B001	Limit S/W	2
P-8	19024ET-B001	Limit Switch Plate	2
P-9	19015PR-B001	S/W Plate	1
P-10	19005SC-8118	Plus Screw (M3*L20)	4
P-11	02010SC-3123	Truss Screw (M4*L8)	4
P-12	25075EL-A001	Connect Cable (25-75)	1
P-13	25065EL-A001	Bar Switch-Joint (25-65)	1
P-14	05100100B000	Switch Bar	2
P-15	05100100BHI0	Switch Bar(B)	1
P-16	05100200B000	Regulatory Rod	1
P-17	11021SC-4113	Hex. Socket Bolt (M4*L35)	1
P-18	18014SW-3115	Spring Washer (@4-No2)	1
P-19	18015SW-3111	Washer (4@-S)	1
P-20	02029SN-9311	Hex.Nut (M4)	2
P-21	05100300B000	Switch Bar Cap	4
P-22	05100600B000	Switch Bar Return Spring	4
P-23	05100700B000	S/W Bar Guide	4
P-24	05100800B000	S/W Bar Return Spring Guide	4
P-25	05100010B000	Main Bar Switch Set	1
P-26	05100900B000	Bar Switch Box (B)	1
P-27	05101100B000	S/W Plate (B)	1
P-28	05101000B000	Regulatory Rod (B)	1
P-29	09001100BT00	Magnetic Switch (Set)	1
P-30	020043BT00	Connect Cable (EMB-51)	1
P-31	-	Connector	1
P-32	02004200BT00	Magnetic Switch Joint (EMB-48)	1

Ref. No	Part No.	Part Names	Q'ty

Q Embroidery Frame (Y-Stroke 1000 Below)

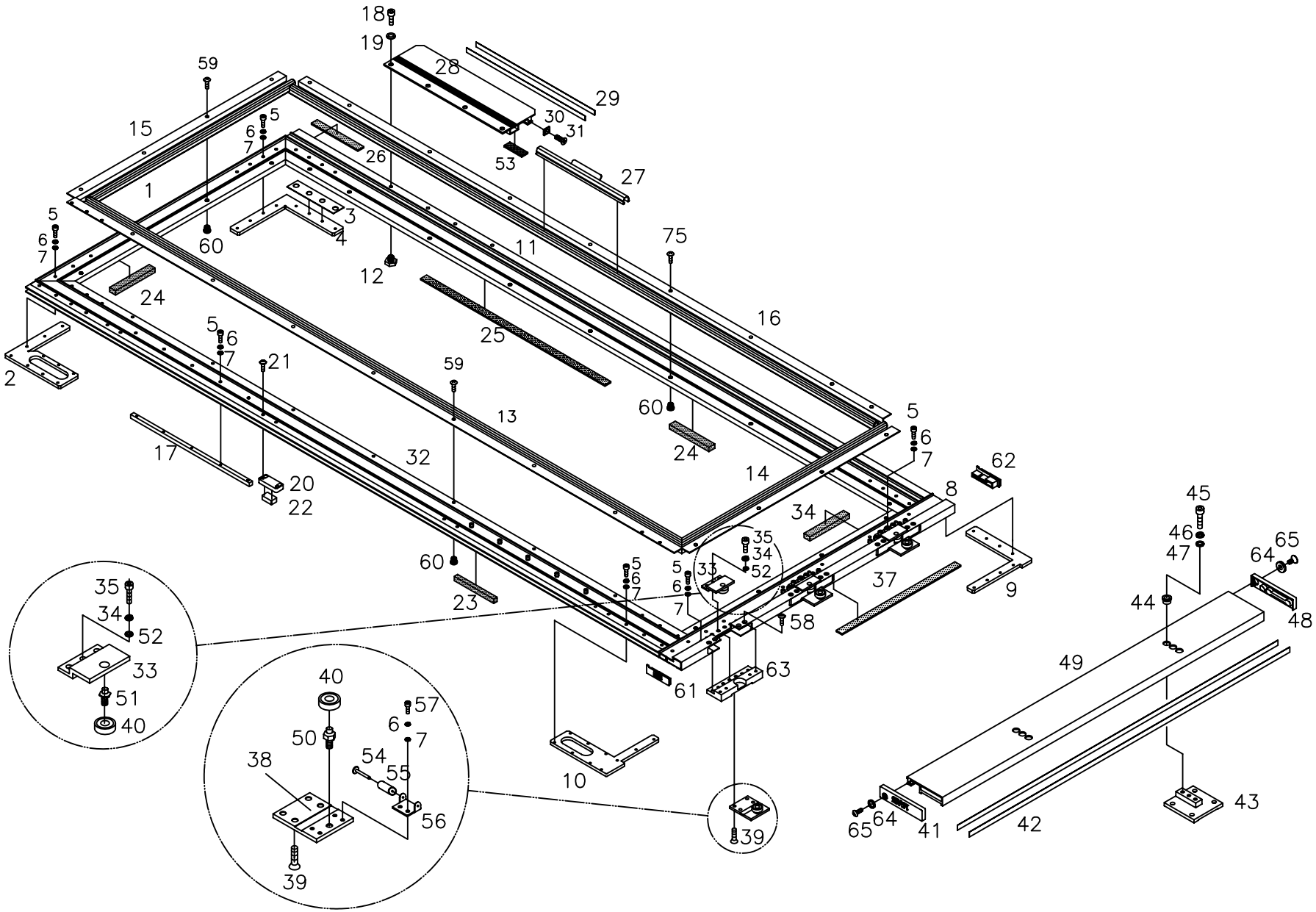

Ref.No	Part No.	Part Names	Q'ty
Q-1	18009AD-A021	Y-Axis Sash (L)	1
Q-2	18016PR-A001	Left Corner Guide (F)	1
Q-3	18011PR-A001	X-Axis Sash Plate (A) (1T)	2
Q-4	18012PR-A001	Left Corner Guide (R)	1
Q-5	04010MC-7113	Hex. Socket Bolt (M4*L10)	93
Q-6	18014SW-3115	Spring Washer (@4-No2)	93
Q-7	18015SW-3111	Washer (4@-S)	93
Q-8	18010AD-A021	Y-Axis Sash(R)	1
Q-9	18020PR-A001	Right Corner Guide (R)	1
Q-10	18025PR-A001	Right Corner Guide (F)	1
Q-11	18002AD-AC00	Rear Sash (L6246)	1
Q-12	GP-010409-00	Screw Bush	20
Q-13	18035AD-AC00	Front Boder Frame Sash L6176	1
Q-14	18041AD-A021	Border Frame Sash (R)	1
Q-15	18039AD-A021	Border Frame Sash (L) L=839	1
Q-16	18030AD-AC00	Rear Boder Frame Sash (L6121)	1
Q-17	18050AF-A001	X-Axis Guide Rail (L400)	4
	18051CW-AC30	X-Axis Guide Rail (L700)	4
Q-18	18048SC-7113	Hex.Socket Bolt (M5*L12)	28
Q-19	18049SW-3111	Washer (@5)	32
Q-20	10500200B000	FELT ATTACHMENT	15
Q-21	18060SC-3328	Tapping Screw (M4X110)	30
Q-22	10500300B000	FRONT FELT (A)	15
Q-23	18069SF-AA00	Front Felt (2) (L=135)	40
Q-24	18071SF-A001	Rear Felt (1) (L=135)	75
Q-25	18065SF-A001	Rear Felt (2)	3
Q-26	18064SF-A001	Rear Felt (3)	2
Q-27	CP-007416-00	Embroidery Frame Clip (300Mm)	42
	CP-007408-00	Embroidery Frame Clip	6
Q-28	18046AD-AC00	X-Axis Guide Rail Sash (L415)	4
Q-29	18090PR-AC00	X-Guide Rail Plate "C" L=414	8
Q-30	18101PR-B001	Stopper	8
Q-31	02002SC-7119	Pluss Screw (M4*L8)	8
Q-32	18006AD-AC00	Front Sash (L6246)	1
Q-33	10006700B000	Bearing Connecting Block	3
Q-34	18048SW-3115	Spring Washer (5@)	3
Q-35	18047SC-7113	Hex. Socket Bolt (M5*L15)	6
Q-37	18062SF-A001	Y-Axis Sash (L) Felt	1
Q-38	10510500B000	Bearing Connecting Block Join	2
Q-39	18067SC-7119	Hex. Socket Bolt (M5X16)	8

Ref. No	Part No.	Part Names	Q'ty
Q-40	15077BR-B001	Ball Bearing (Lr606Nppu)	6
Q-41	GP-005290-01	END CAP(L)	1
Q-42	18069PR-A021	X-Axis Guide Rail Plate (L=1528)	2
Q-43	15069CW-A021	X-Asix Feed Plate	2
Q-44	18070CW-A021	Insert Bushing	6
Q-45	08091SC-7113	Hex. Socket Bolt (M6*L20)	6
Q-46	03026SW-9115	Spring Washer (@6)	6
Q-47	08057SW-1111	Washer (@6)	6
Q-48	GP-005291-01	END CAP(R)	1
Q-49	GP-005296-00	FRAME H(Y-750)	1
Q-50	18062CW-A021	Rail Guide Pin "B"	2
Q-51	18066CW-A021	Rail Guide Pin "A"	2
Q-52	18049SW-3111	Washer (@5)	8
Q-53	18073SF-A001	Rear Felt (S)	8
Q-54	10510800B000	Roller Pin	3
Q-55	18107CW-B001	Roller	3
Q-56	18106PR-B001	Roller Bracket	3
Q-57	02023SC-7113	Hex. Socket Bolt (M4*L8)	6
Q-58	02010SC-3123	Truss Screw (M4*L8)	12
Q-59	02010SC-3123	Truss Screw (M4*L8)	90
Q-60	10500110B000	Screw Bushing C (M8*P0.75)	96
Q-61	10000300B000	Embroidery G End Cap (F)	1
Q-62	10000400B000	Embroidery G End Cap (F)	1
Q-63	10005500B000	BEARING CONNECTING BLOCK	3
Q-64	WS-000132-00	COVER FOR RAIL	2
Q-65	02010SC-3123	SCREW FOR RAIL COVER	2

Q1 Embroidery Frame (Y-Stroke 1200 Ablove)

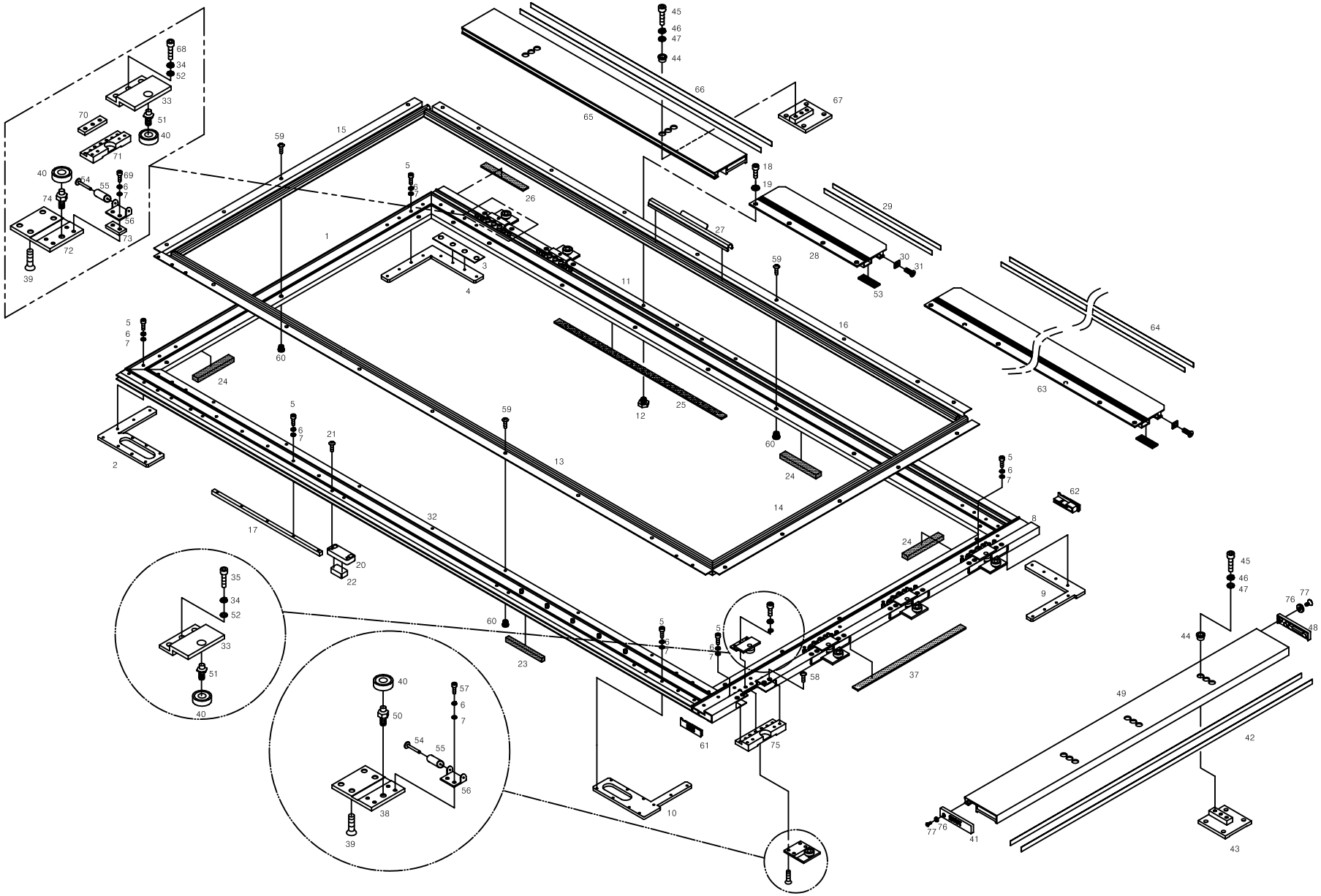

Ref.No	Part No.	Part Names	Q'ty
Q1-1	10000300BH19	Y-Axis Sash(L)	1
Q1-2	18016PR-A001	Left Corner Guide (F)	1
Q1-3	18011PR-A001	X-Axis Sash Plate (A) (1T)	2
Q1-4	18012PR-A001	Left Corner Guide (R)	1
Q1-5	04010MC-7113	Hex. Socket Bolt (M4*L10)	93
Q1-6	18014SW-3115	Spring Washer (@4-No2)	93
Q1-7	18015SW-3111	Washer (4@-S)	93
Q1-8	10000400BHI9	Y-Axis Sash(R)	1
Q1-9	18020PR-A001	Right Corner Guide (R)	1
Q1-10	18025PR-A001	Right Corner Guide (F)	1
Q1-11	10000100BHI9	Rear Sash	1
Q1-12	GP-010409-00	Screw Bush	20
Q1-13	10000600BHI9	Front Boder Frame Sash	1
Q1-14	10000800BHI9	Border Frame Sash (R)	1
Q1-15	10000700BHI9	Border Frame Sash(L)	1
Q1-16	10000500BHI9	Rear Boder Frame Sash	1
Q1-17	18050AF-A001	X-Axis Guide Rail	4
	18051CW-AE00	X-AXIS GUIDE RAIL (L520)	4
Q1-18	18048SC-7113	Hex.Socket Bolt (M5*L12)	28
Q1-19	18049SW-3111	Washer (@5)	32
Q1-20	10500200B000	Felt Attachment	15
Q1-21	18060SC-3328	Tapping Screw (M4X110)	30
Q1-22	10500300B000	FRONT FELT (A)	4
Q1-23	18069SF-AA00	FRONT FELT (I)	15
Q1-24	18071SF-A001	FRONT FELT (K)	12
Q1-25	18065SF-A001	FRONT FELT (E)	3
Q1-26	18064SF-A001	FRONT FELT (D)	2
Q1-27	18084PR-A001	Embroidery Frame Clip (300Mm)	50
	18085PR-A001	Embroidery Frame Clip	10
Q1-28	18046AD-A102	X-AXIS GUKDE RAIL SASH (L520)	4
Q1-29	18090PR-A102	GUIDE RAIL PLATE "G" L=519	8
Q1-30	18101PR-B001	Stopper	8
Q1-31	02002SC-7119	Pluss Screw (M4*L8)	8
Q1-32	10000200BHI9	Front Sash	1
Q1-33	10006700B000	Bearing Connecting Block	6
Q1-34	18048SW-3115	Spring Washer (5@)	12
Q1-35	18047SC-7113	Hex. Socket Bolt (M5*L15)	12
Q1-37	18062SF-A001	Y-Axis Sash (L) Felt	1
Q1-38	10510500B000	Bearing Connecting Block Join	4
Q1-39	18067SC-7119	Hex. Socket Bolt (M5X16)	24

Ref. No	Part No.	Part Names	Q'ty
Q1-40	15077BR-B001	Ball Bearing (Lr606Nppu)	12
Q1-41	GP-005290-01	END CAP(L)	1
Q1-42	10001100B009	X-Axis Guide Rail Plate	2
Q1-43	15069CW-A021	X-Asix Feed Plate	2
Q1-44	18070CW-A021	Insert Bushing	15
Q1-45	08091SC-7113	Hex. Socket Bolt (M6*L20)	15
Q1-46	03026SW-9115	Spring Washer (@6)	15
Q1-47	08057SW-1111	Washer (@6)	15
Q1-48	GP-005291-01	END CAP(R)	1
Q1-49	GP-005298-00	FRAME H(Y-1200)	1
Q1-50	18062CW-A021	Rail Guide Pin "B"	4
Q1-51	18066CW-A021	Rail Guide Pin "A"	6
Q1-52	18049SW-3111	Washer (@5)	18
Q1-53	18073SF-A001	Rear Felt (S)	8
Q1-54	10510800B000	Roller Pin	6
Q1-55	18107CW-B001	Roller	6
Q1-56	18106PR-B001	Roller Bracket	6
Q1-57	02023SC-7113	Hex. Socket Bolt (M4*L8)	8
Q1-58	02010SC-3123	Truss Screw (M4*L8)	24
Q1-59	02010SC-3123	Truss Screw (M4*L8)	90
Q1-60	10500110B000	Screw Bushing C (M8*P0.75)	96
Q1-61	10000300B000	Embroidery G End Cap (F)	1
Q1-62	10000400B000	Embroidery G End Cap (R)	1
Q1-63	18006AD-B000	EMBROIDERY FRAME E L=330CM	1
Q1-64	18090PR-B000	X-Guide Rail Plate (E-1)	2
Q1-65	10800030BHI9	X-Axis Guide Rail Sash (F)	1
Q1-66	18091PR-B000	X-Guide Rail Plate (F)	2
Q1-67	04007000B000	Y-Axis Feed Plate	2
Q1-68	03016SC-4113	Hex. Socket Bolt (M5*L18)	6
Q1-69	07016SC-7113	Hex. Socket Bolt (M4*L12)	4
Q1-70	10000800BK00	Bearing Connecting Block Space	2
Q1-71	10000600BK00	Bearing Connecting Block (B)	2
Q1-72	10510500B000	Bearing Connecting Block Joint(B)	2
Q1-73	10000900BK00	Roller Bracket Space	2
Q1-74	18062CW-A021	Bearing Pin	2
Q1-75	10005500B000	BEARING CONNECTING BLOCK	4
Q1-76	WS-000132-00	COVER FOR RAIL	2
Q1-77	02010SC-3123	SCREW FOR RAIL COVER	2

R

Main Controller

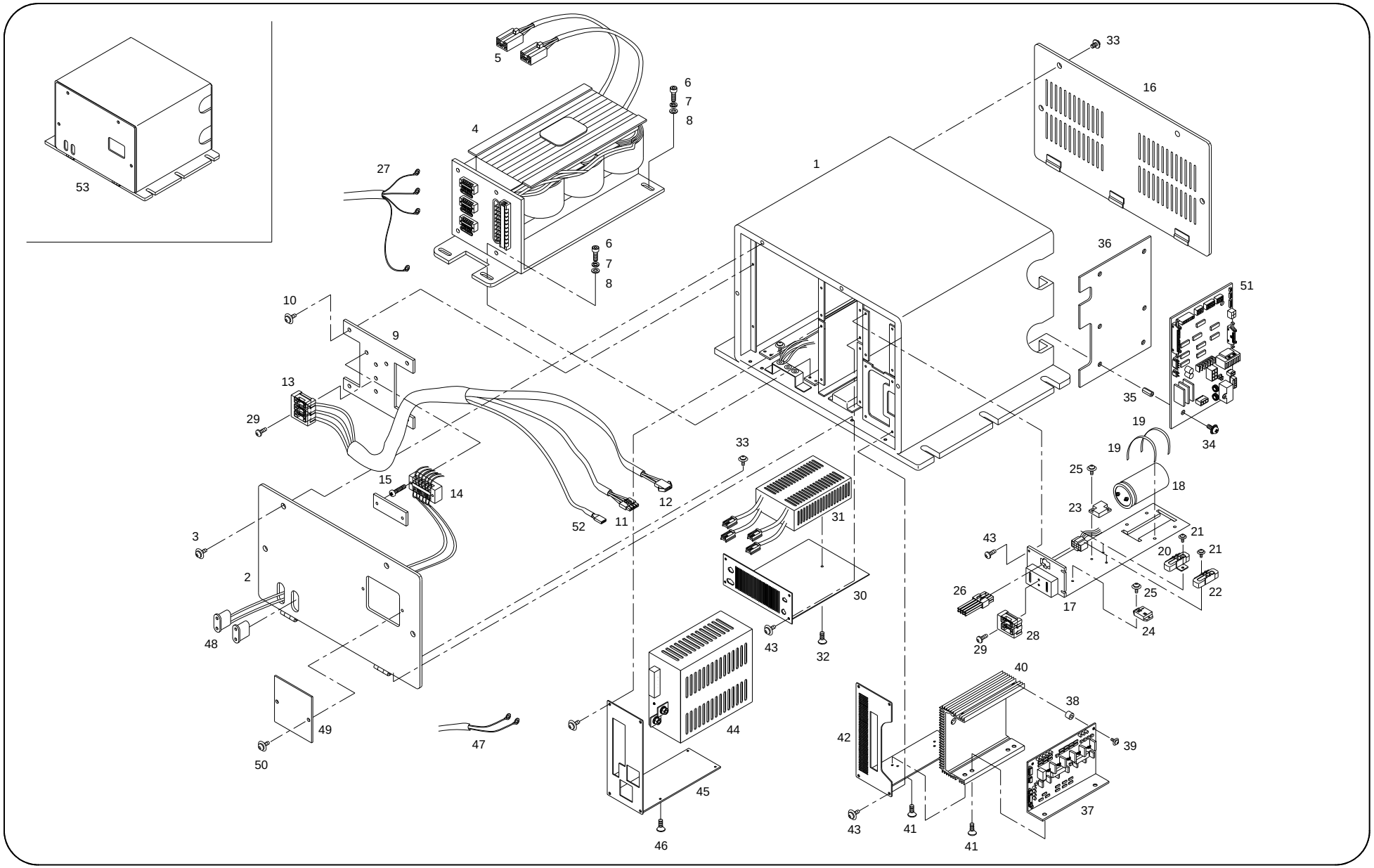

Ref.No	Part No.	Part Names	Q'ty
R-001	03-001A-SW66	Control Box	1
R-002	10-003A-HB10	Con. Box Front Cover	1
R-003	02-002C-SW66	Fixing Screw	4
R-004	06-013A-SW66	Transformer	1
R-005	01-001A-SW66	X-Y Power Input Cable	1
R-006	10-016M-SW66	Wrench Screw (M6*L12)	4
R-007	10-003S-SW66	Spring Washer (6@)	1
R-008	10-004S-SW66	Washer (6@)	1
R-009	03-013A-SW66	Trans.Cover Stud	4
R-010	10-019M-SW66	Screw (M3*L10)	4
R-011	01-005B-MHS1	AC Power to Joint Board Cable	1
R-012	07-004S-SM5S	Lamp Input Cable	1
R-013	03-115B-SW66	Fuse Holder	1
R-014	05-004B-SW65	Terminal Block	1
R-015	10-018M-SW66	Screw (M4*L10)	4
R-016	03-016A-SW66	Con.Box Rear Cover	1
R-017	03-014A-SW66	Condencer Fixed Plate	1
R-018	05-002A-SW65	Condencer 33,000Uf	1
R-019	06-018C-SW66	Cable Tie	4
R-020	05-001A-SW65	5/150W	1
R-021	10-021M-SW66	Screw	2
R-022	09-007A-SC53	Resistor	2
R-023	05-010A-SW65	S20Vt80	1
R-024	05-004A-SW65	Diode S30Vt60	1
R-025	07-005S-SM5S	Screw For Fdd (M3*L10)	2
R-026	01-019M-SW66	Power Connect	2
R-027	06-005C-SW66	Power Input Cable	1
R-028	03-114B-SW66	Fuse Holder	2
R-029	10-031M-SW66	Fuse Holder Fixing Screw (M4*L10)	2
R-030	04-0000-HB10	SMPS Bracket	1
R-031	GP-007472-00	Digital SMPS	1
R-032	09-040S-3701	SMPS Holder Fixing Screw (M4*L10)	2
R-033	07-004S-SM5S	Fixing Screw (M4*L8)	4
R-034	10-028S-SC53	Pcb Fixing Screw	6
R-035	08-003M-SW67	Stud Bolt	6
R-036	07-0000-SW70	Joint Board Bracket	1
R-037	04-0000-CPT1	Trim Driver Board	1
R-038	10-006M-PT10	Insulator Bushing For Cpu	2
R-039	07-005S-SM5S	Screw For Fdd (M3*L10)	2
R-040	01-101A-SW67	Heat Sink (T)	4

Ref. No	Part No.	Part Names	Q'ty
R-041	09-040S-3701	Trim Driver Holder Fixing Screw (M4*L10)	4
R-042	10-006A-HB10	Trim Driver Bracket	1
R-043	10-018M-SW66	Screw (M4*L10)	4
R-044	10-001A-HB10	+24V SMPS	1
R-045	10-004A-HB10	+24V SMPS Bracket	1
R-046	10-002S-SW66	+24V SMPS Holder Fixing Screw (M3*L8)	2
R-047	10-009B-HB10	+24V SMPS AC Input Cable	1
R-048	01-019M-SW66	Outlet	2
R-049	10-112B-SW66	Fuse Protection Plate	1
R-050	10-040M-SW67	Truss Screw (M4*L8)	2
R-051	BD-000189-07	JOINT BOARD (MH-JNT)	1
R-052	01-001B-MHS1	Digital SMPS Input Cable	1
R-053	SWF-3C1-12	CONTROL BOX SET (30H Below)	1
	SWF-3C1-30	CONTROL BOX SET (30H Above)	

S

X/Y Axis Driever

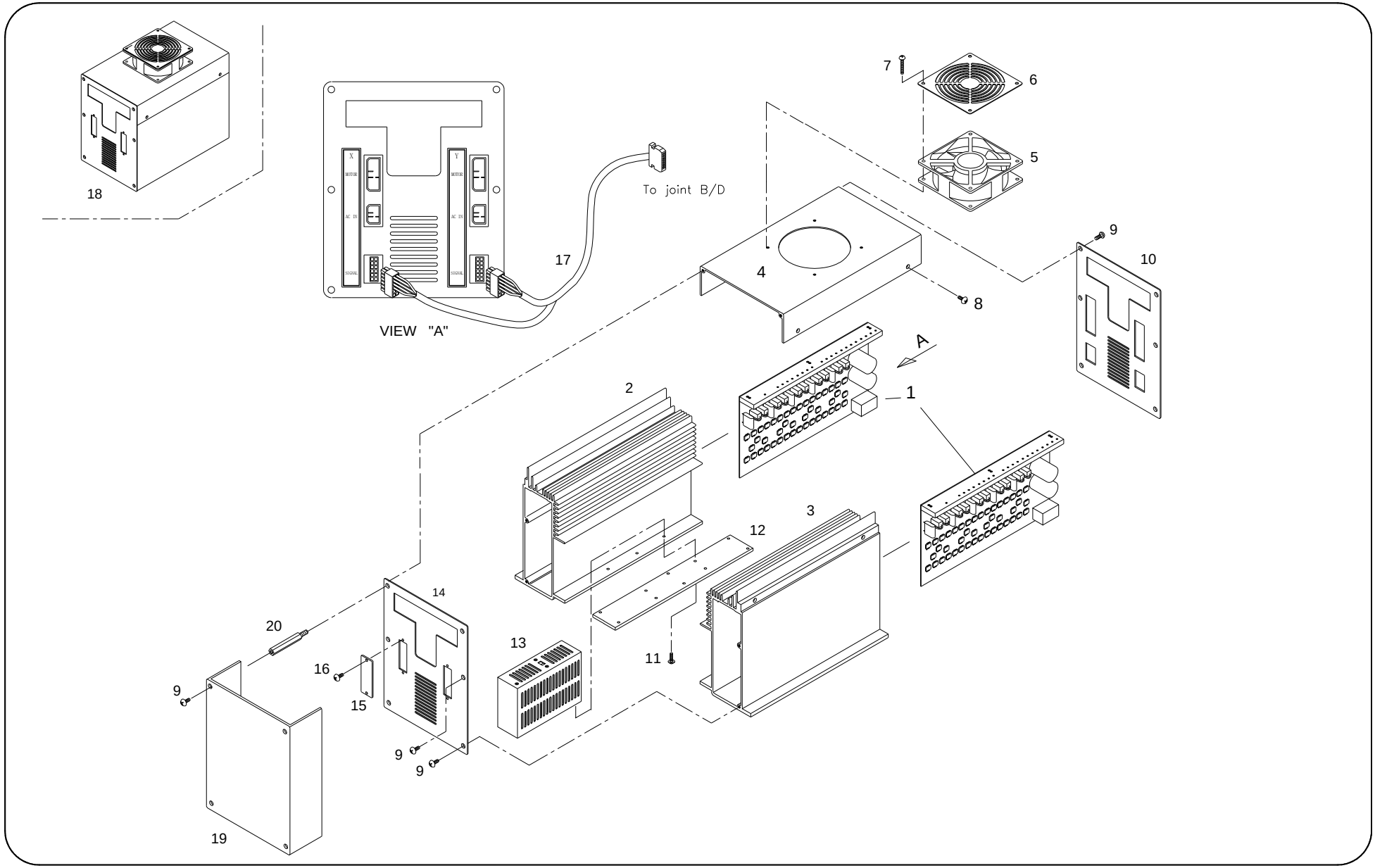

SWF/GE-Series

Ref.No	Part No.	Part Names	Q'ty
S-1	10-0000-SW70	New Amp Board	2
S-2	01-103A-SW70	Drive Box (L)	1
S-3	01-104A-SW70	Drive Box (R)	1
S-4	01-005A-SW70	Top Cover	1
S-5	03-002A-SW70	Fan	1
S-6	03-003A-SW67	Fan Cover	1
S-7	10-017M-SW66	Fan Screw (M4*L50)	4
S-8	10-014M-SW66	Screw (M4*L12)	4
S-9	10-040M-SW66	Cover Screw (M4*L8)	12
S-10	01-006A-SW70	Front Cover	1
S-11	10-018M-SW66	Screw (M4*L10)	4
S-12	01-009A-SW70	Box Connecting Plate	1
S-13	01-002A-SW70	Smps	1
S-14	01-008A-SW70	Rear Cover	1
S-15	02-001B-SW67	Switch Cover	2
S-16	10-015M-SW66	Screw (M3*L6)	4
S-17	25068EL-A001	Step Motor Driver Signal Cable	1
S-18	SWF-XY-2	X-Y Driver Set	1
S-19	24003PR-A001	Driver Cable Cover	1
S-20	24004CW-A001	Driver Cable Cover Bolt	4

Ref. No	Part No.	Part Names	Q'ty

T

Operation Unit

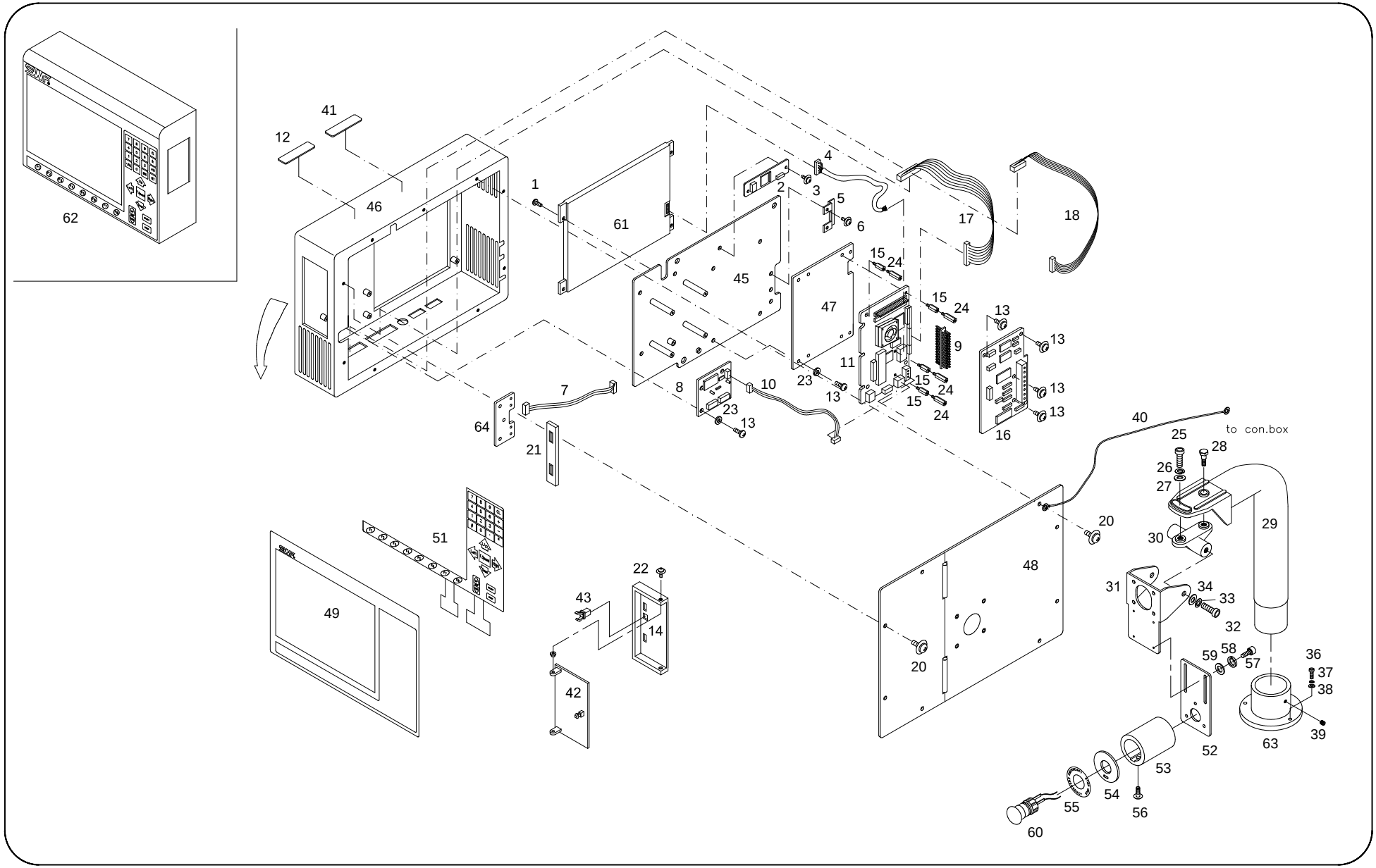

Ref.No	Part No.	Part Names	Q'ty
T-1	10-003M-SW66	Screw	4
T-2	22026EL-A001	LCD Inverter	1
T-3	10-001A-SW66	Screw	2
T-4	03-021A-SW63	Cable (Op-Lcd)	1
T-5	02-004B-SW63	Lcd Connect Plate	1
T-6	10-021M-SW66	Screw	1
T-7	CA-003737-00	CPU Board To USB Board Cable	1
T-8	BD-000966-00	Keyborad	1
T-9	EP-000421-00	HEADER PIN (32*2/20mm)	1
T-10	06-105C-SW66	Cable (CPU-Key board)	1
T-11	BD-000987-01	CPU Board	1
T-12	GP-051947-00	GE PLUS Series Sticker	1
T-13	10-028S-SC53	Pedal Pcb Fixing Screw	8
T-14	GP-038522-00	FDD Bracket	1
T-15	01-001M-OT01	Stud (12mm)	2
T-16	BD-000221-01	I/O Card	1
T-17	06-010B-SW66	Parallel Cable	1
T-18	06-005A-SW66	Serial Cable	1
T-20	10-023M-SW66	Cover Screw (M4*L8)	12
T-21	GP-038524-00	FDD Bracket Protected Plate	1
T-22	10-019M-SW66	Screw (M3X110)	6
T-23	06-015S-SW66	Washer	12
T-24	10-012M-PT10	STUD (15mm)	2
T-25	08087SC-7113	Hex. Socket Bolt (M8*L25)	1
T-26	15095SW-3115	Spring Washer (@8)	1
T-27	08041SW-1111	Washer (@8-S)	1
T-28	19039CW-T121	Adjusting Bolt	1
T-29	19040CA-B001	Operation Box Support	1
T-30	19035CA-T121	Hinged Block	1
T-31	09100200B000	Emergency Switch Bracket (A)	1
T-32	08087SC-7113	Hex. Socket Bolt (M8*L25)	1
T-33	15095SW-3115	Spring Washer (@8)	1
T-34	08041SW-1111	Washer (@8-S)	1
T-36	08091SC-7113	Hex. Socket Bolt (M6*L20)	3
T-37	16014SW-4115	Spring Washer (@8)	3
T-38	08057SW-1111	Washer (@6)	3
T-39	14060SC-4517	Hex.Socket Set Screw (M6*L6)	2
T-40	25127EL-B001	Op Box To Con Box Earth	1
T-41	09000300B000	Magnet Sticker	1
T-42	01-002B-SW63	Fdd Window	1

Ref. No	Part No.	Part Names	Q'ty
T-43	01-003B-SW63	Push Lathy	1
T-45	20-004A-SW70	Base Plate (10.4")	1
T-46	GP-038521-00	Operation Box (10.4")	1
T-47	03-018A-SW70	Pc Board Plate (10.4")	1
T-48	02-202A-9000	Box Cover (10.4")	1
T-49	02-104A-SW70	L.C.D Protected Plate	1
T-51	10-003A-0T10	Membrane Switch	1
T-52	09200200B000	Emergency Switch Bracket (B)	1
T-53	09200300B000	Emergency Switch Holder (B)	1
T-54	09000500B000	Emergency Switch Plate	1
T-55	02103ET-UK01	Emergency Switch Sticker	1
T-56	02023SC-7113	Truss Screw (M4*L10)	1
T-57	07016SC-7113	Hex. Socket Bolt (M4*L12)	3
T-58	18014SW-3115	Spring Washer(@4)	3
T-59	18015SW-3111	Washer(@4)	3
T-60	09001000BT00	Emergency Switch	1
T-61	20-006A-SW70	LCD MONITOR (10.4")-LB104V3	1
T-62	SWF-00000795	OP BOX SET	1
T-63	09000400B000	GUIDE BUSH (A)	1
T-64	BD-000709-00	USB Board	1

U

Bobbin Winder

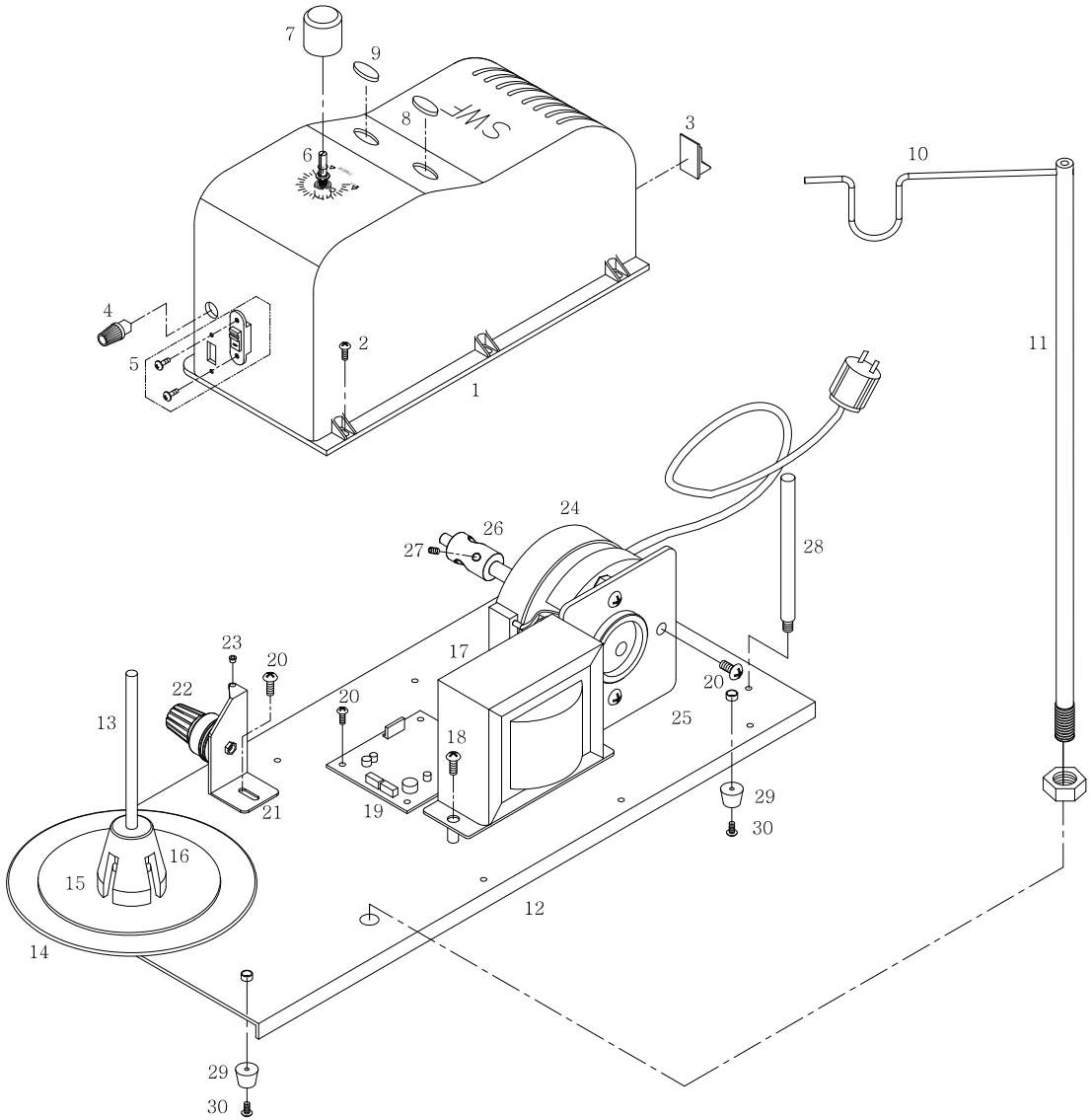

Ref.No	Part No.	Part Names	Q'ty
U-1	GP-014869-01	Cover	1
U-2	18153SC-3123	Truss Screw (M4*L12)	8
U-3	EP-000079-00	On / Off Switch	1
U-4	GP-014678-00	Fuse Holder	1
U-5	EP-000082-00	Switch (Select)	1
U-6	GP-014677-00	VR Knob	1
U-7	EP-000083-00	VR	1
U-8	EP-000080-00	Push Switch (Start)	1
U-9	EP-000081-00	Push Switch (Stop)	1
U-10	GP-014369-00	Antenna Bar Hanger	2
U-11	GP-014368-00	Antenna Bar	1
U-12	GP-014870-00	Base	1
U-13	GP-014366-00	Spool Post	1
U-14	GP-014363-00	Spool Support Base	1
U-15	GP-014365-00	Spool Support Base Sponge	1
U-16	12012-PM-A001	Spool Holder	1
U-17	EP-000078-00	Transformer A'ssy	1
U-18	18153SC-3123	Truss Screw (M4*L12)	8
U-19	EP-000095-00	PCB (DW-BW01)	1
U-20	15042SC-3123	Truss Screw (M4*L6)	9
U-21	GP-014370-00	Tension Control Holder	1
U-22	AS-003951-00	Thread Control Device Ass'y	1
U-23	05452CM-A001	Thread Guide Bushing	1
U-24	MO-000029-00	Motor Ass'y	1
U-25	GP-014871-00	Motor Bracket	1
U-26	GP-014354-03	Bobbin Shaft	1
U-27	SC-000173-00	Set Screw (M5*L4)	1
U-28	02026SC-A001	Stand	1
U-29	GP-014346-00	Rubber For Support Base	4
U-30	13054SC-3123	Truss Screw (M3*L8)	4

Ref. No	Part No.	Part Names	Q'ty