SiRUBA GAGE PARTS LIST	Series	Remark	Page	Date
	HF008		1/1	2022/07/08

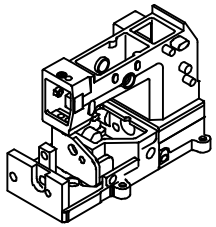
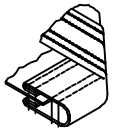
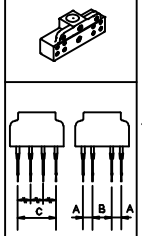

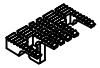
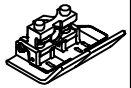

機　型 MODEL	規格 SVB CLASS	種 類 NEEDLE GAUGE	針 座 NEEDLE HOLDER	針 板 NEEDLE PLATE	送 具 FEED DOG	押 具 PRESSER FOOT	針 棒 NEEDLE BAR	針 頂 NEEDLE GUARD	勾　針 LOOPER		勾針座 LOOPER HOLDER	針　號 NEEDLE
HF008-02/HHD	064	1/4"	M8003	E8003	D8003	P8023	VF12P	HC15Q	HE21Q	HE22Q	HE07C	UYX128GAS #14~#16
HF008-03/HHD	064	1/4"	M8003	E8003	D8003	P8023	VF12P	HC15Q	HE21Q	HE22R HE22Q	HE07C	TVX5 #14~#16
HF008-03/HTF	064	1/4"	M8003	E8003	D8003	P8003	VF12P	HC15Q	HE21Q	HE22R HE22Q	HE07C	TVX5 #18~#21
HF008-0464	254	1/4"-1"-1/4"	M8104	E8104	D8104	P8104	VF12T	HC15	HE21*2	HE22*2	HE07D	TVX5 #18~#21
HF008-0464 /HPR	254	1/4"-1"-1/4"	M8104	E8104	D8104	P8104	VF12T	HC15	HE21*2	HE22*2	HE07D	TVX5 #18~#21
HF008-0464 /HAC	254	1/4"-1"-1/4"	M8104	E8104	D8104	P8104	VF12T	HC15	HE21*2	HE22*2	HE07D	TVX5 #18~#21
HF008-02/FBQ	056	7/32"	M5356	E4001 E1836Q	D1836Q H1836Q	P4000-A P4002-A	VF12P	FBQ89	ME28	無	FBQ75	UYX128GAS #14
HF008-02/FBQ	064	1/4"	M5364	E4001 E1837Q	D1836Q H1836Q	P4001-A P4002-A	VF12P	FBQ89	ME28	無	FBQ75	UYX128GAS #14
HF008-02/FBQ /TC	056	7/32"	M5356	E4001 E1836Q	D1836Q H1836Q	P4000-A P4002-A	VF12P	FBQ89	ME28	無	FBQ75	UYX128GAS #14
HF008-02/FBQ /TC	064	1/4"	M5364	E4001 E1837Q	D1836Q H1836Q	P4001-A P4002-A	VF12P	FBQ89	ME28	無	FBQ75	UYX128GAS #14

SIRUBA PARTS LIST	Series	Parts Group	Subclass / Remark	Page
	HF008	HA		1/2
				Date
				2018/12/25

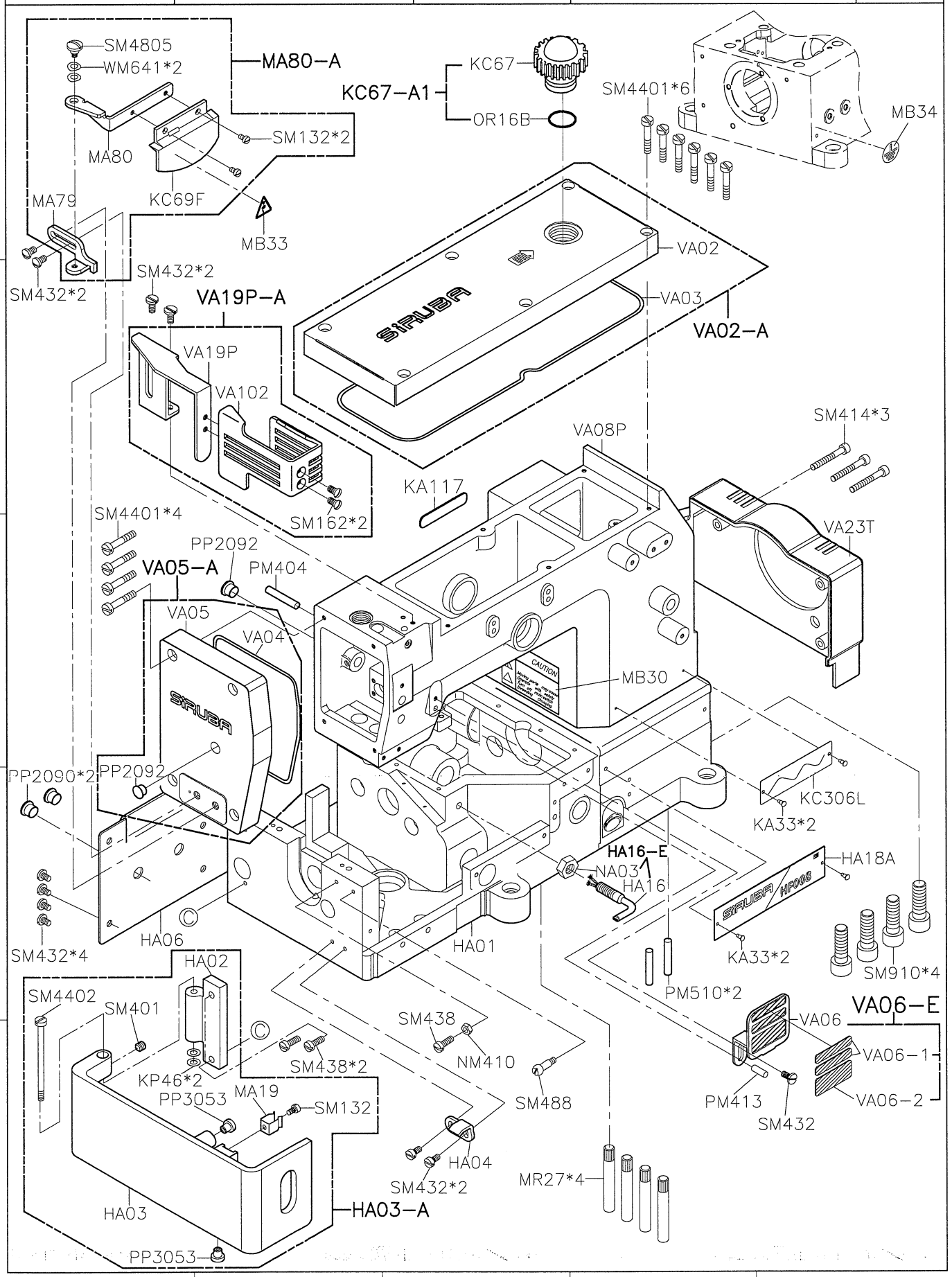

SiRUBA PARTS LIST	Series	Parts Group	Subclass / Remark	Page
	HF008	HA		2/2
				Date
				2012/11/20

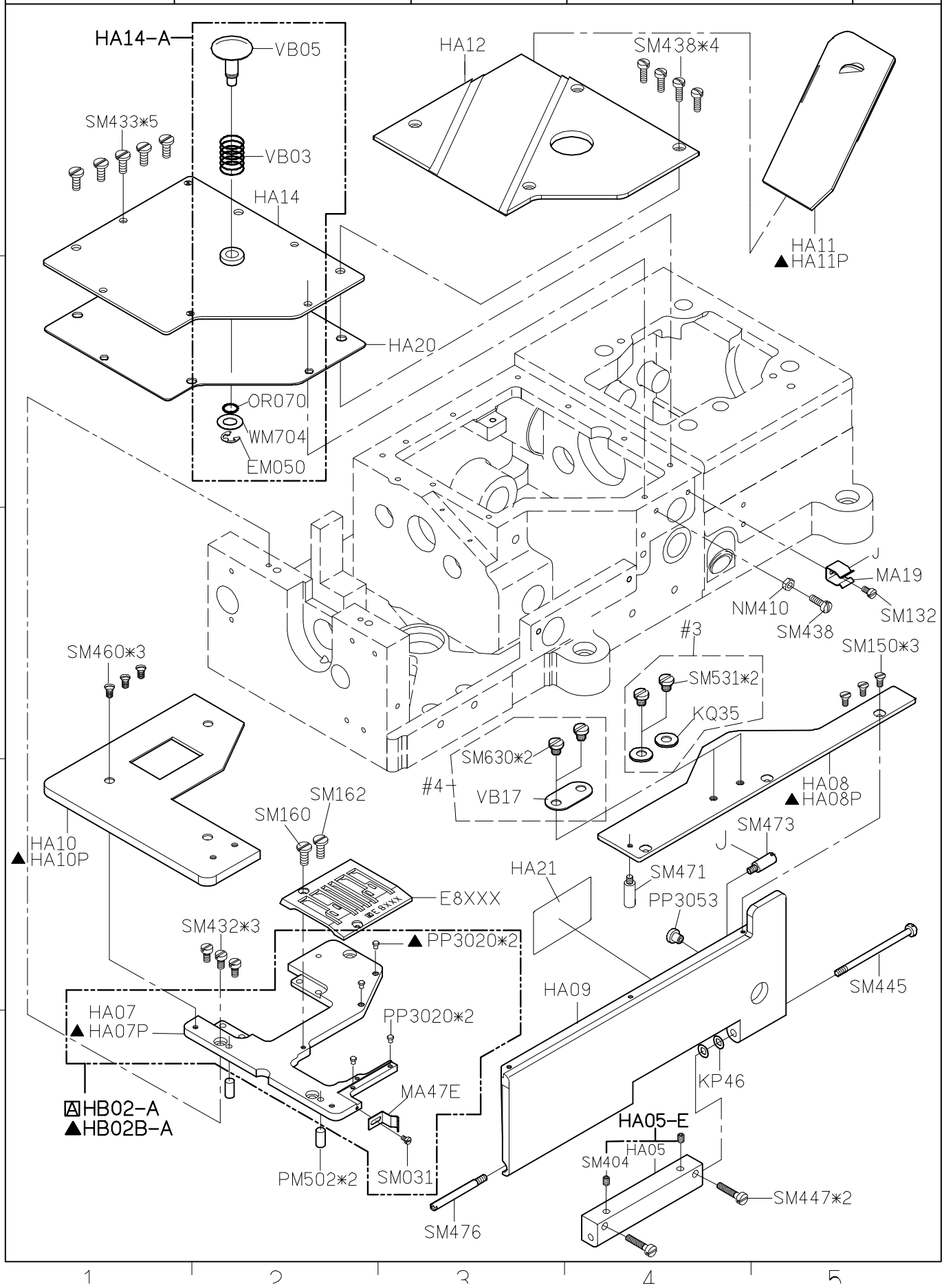

SIRUBA PARTS LIST	Series	Parts Group	Subclass / Remark	Page
	HF008	HB		1/2
				Date
				2022/06/02

(FOR 2.3 NEEDLE USE)

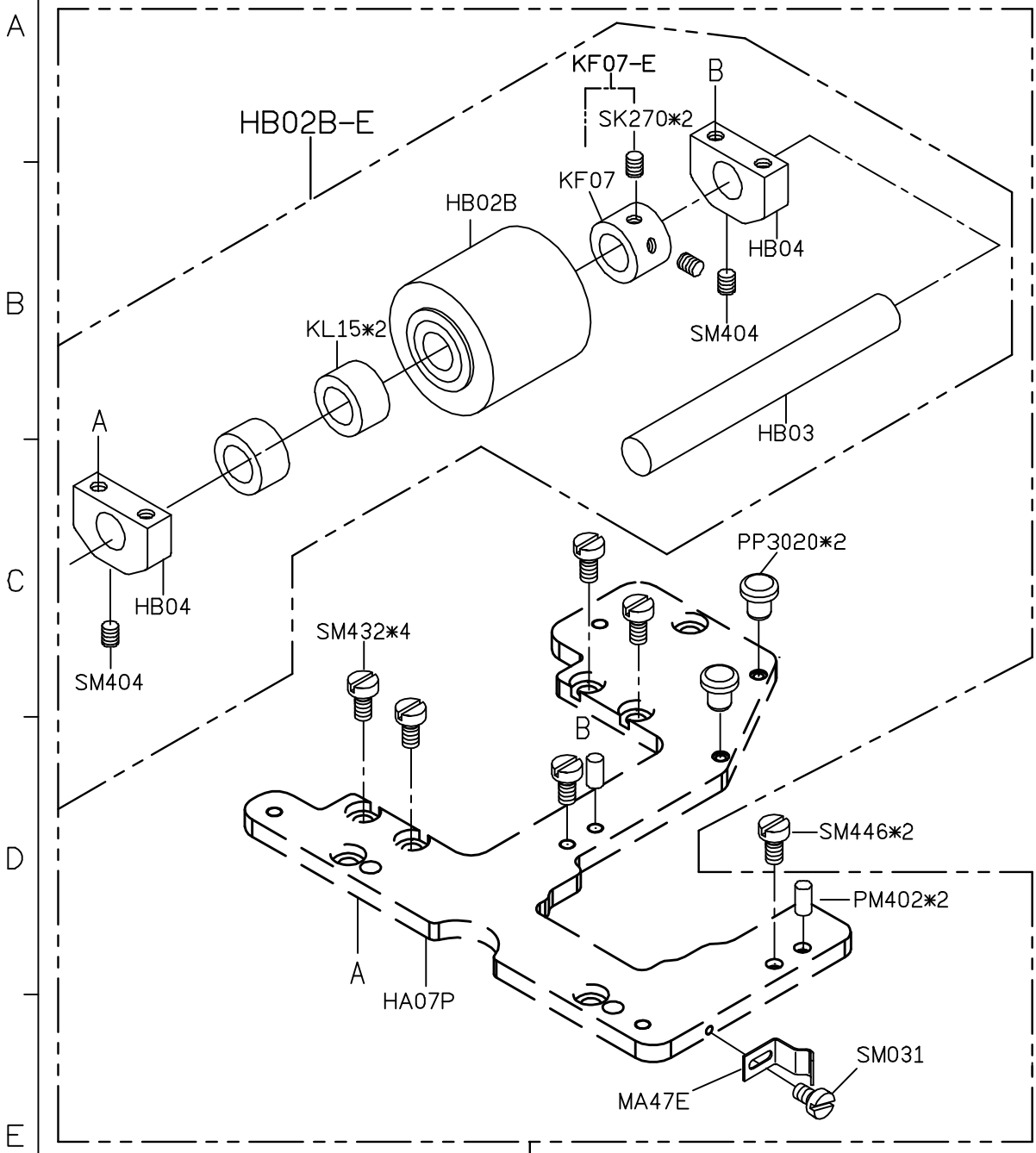

A + B = HB02B-A

HA HB

B HB02B-A

SIRUBA PARTS LIST	Series	Parts Group	Subclass / Remark	Page
	HF008	HB		2/2
				Date
				2022/06/02

(FOR 4 NEEDLE USE)

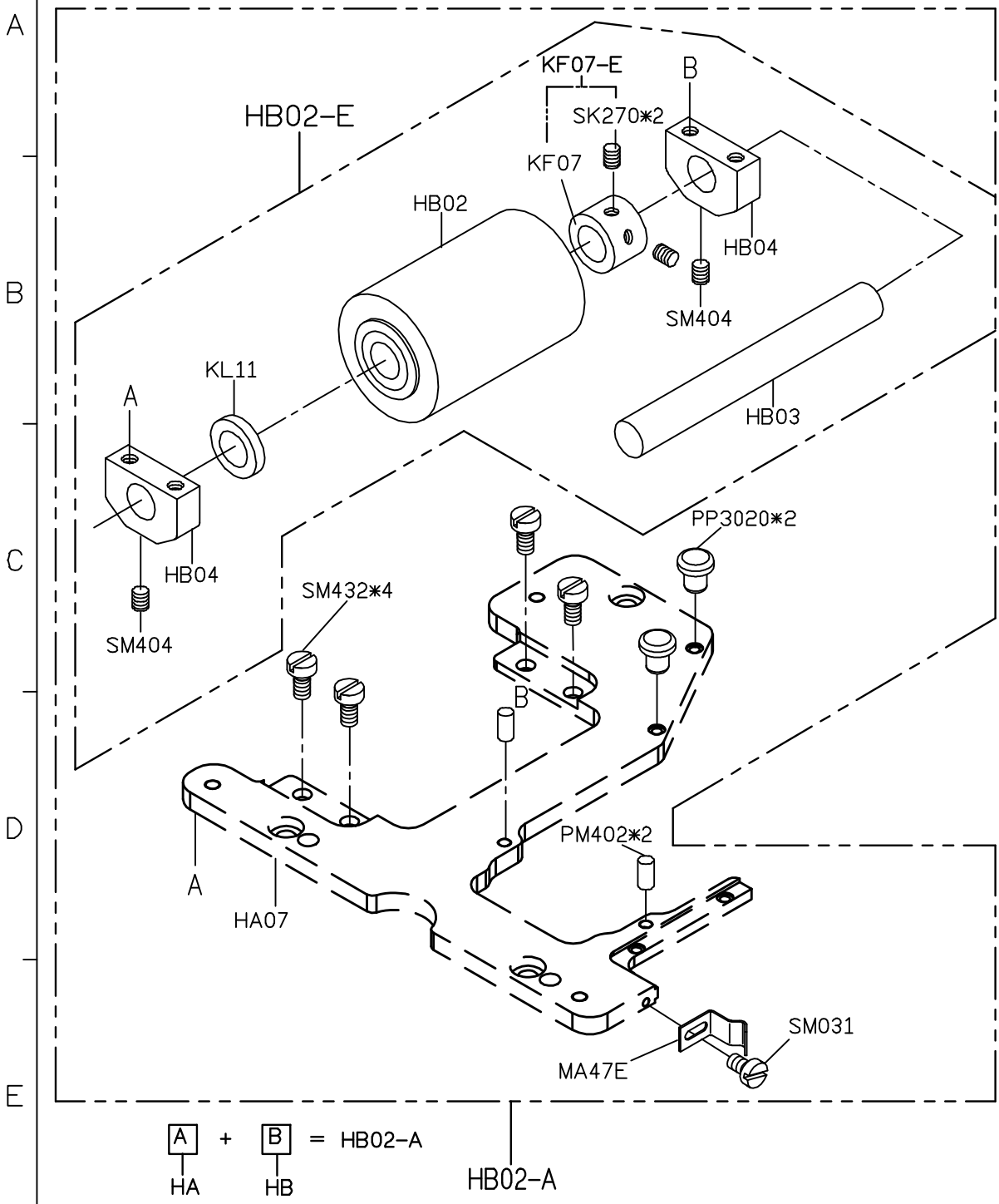

SIRUBA PARTS LIST	Series	Parts Group	Subclass / Remark	Page
	HF008	HC		1/1
				Date
				2012/08/25

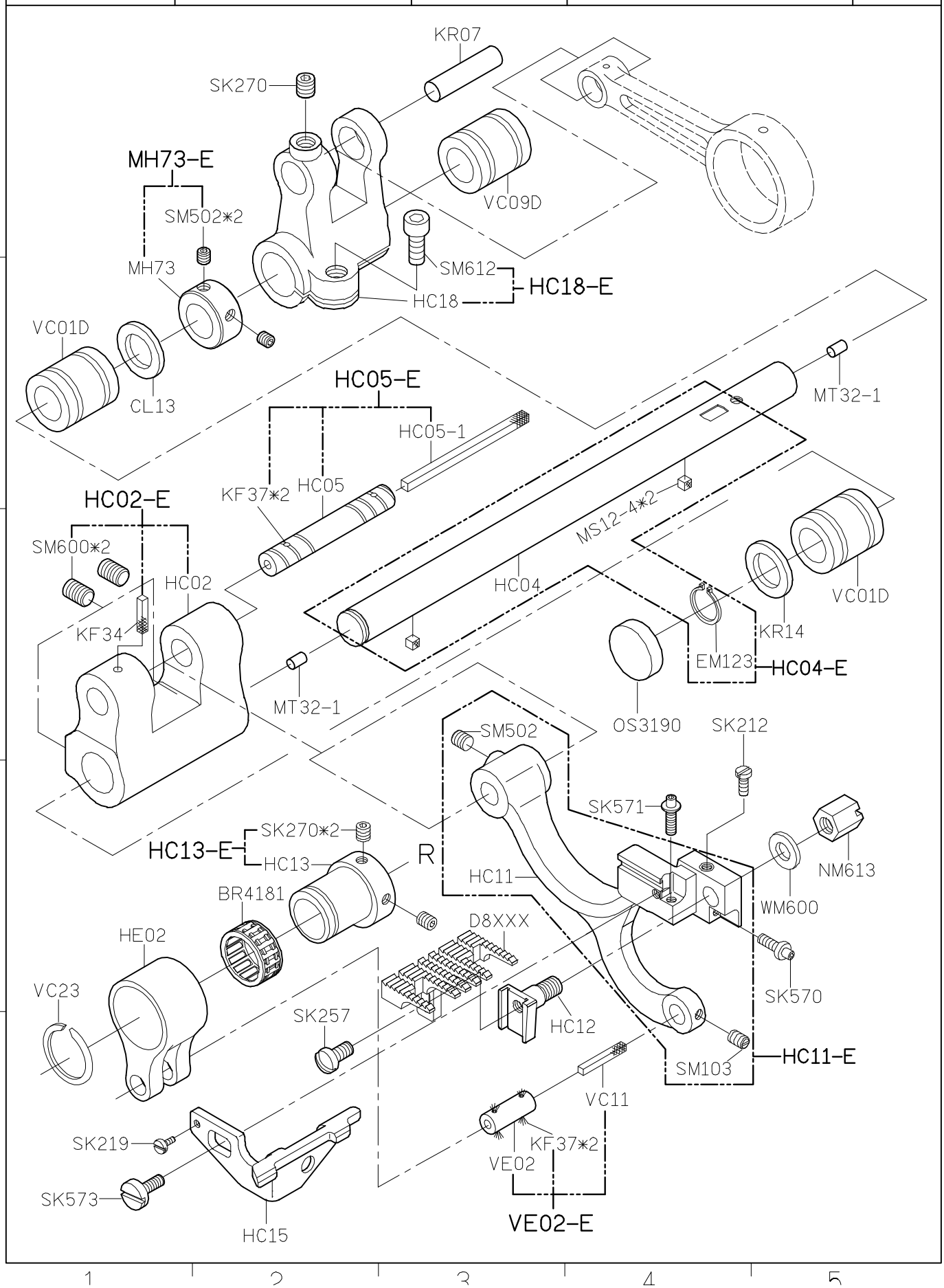

SIRUBA PARTS LIST	Series	Parts Group	Subclass / Remark	Page
	HF008	HD		1/2
				Date
				2018/05/31

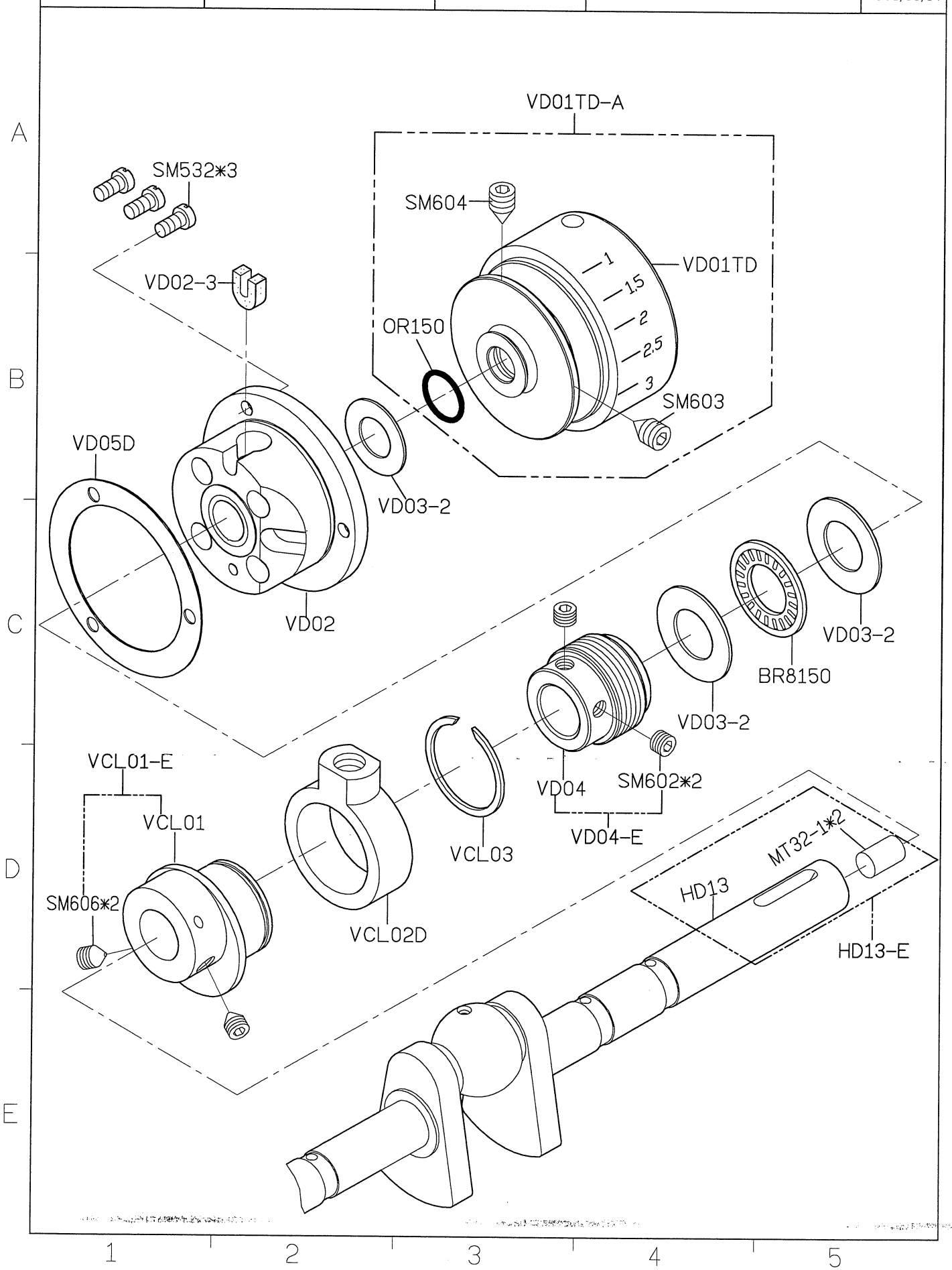

SiRUBA PARTS LIST	Series	Parts Group	Subclass / Remark	Page
	HF008	HD		2/2
				Date
				2012/08/25

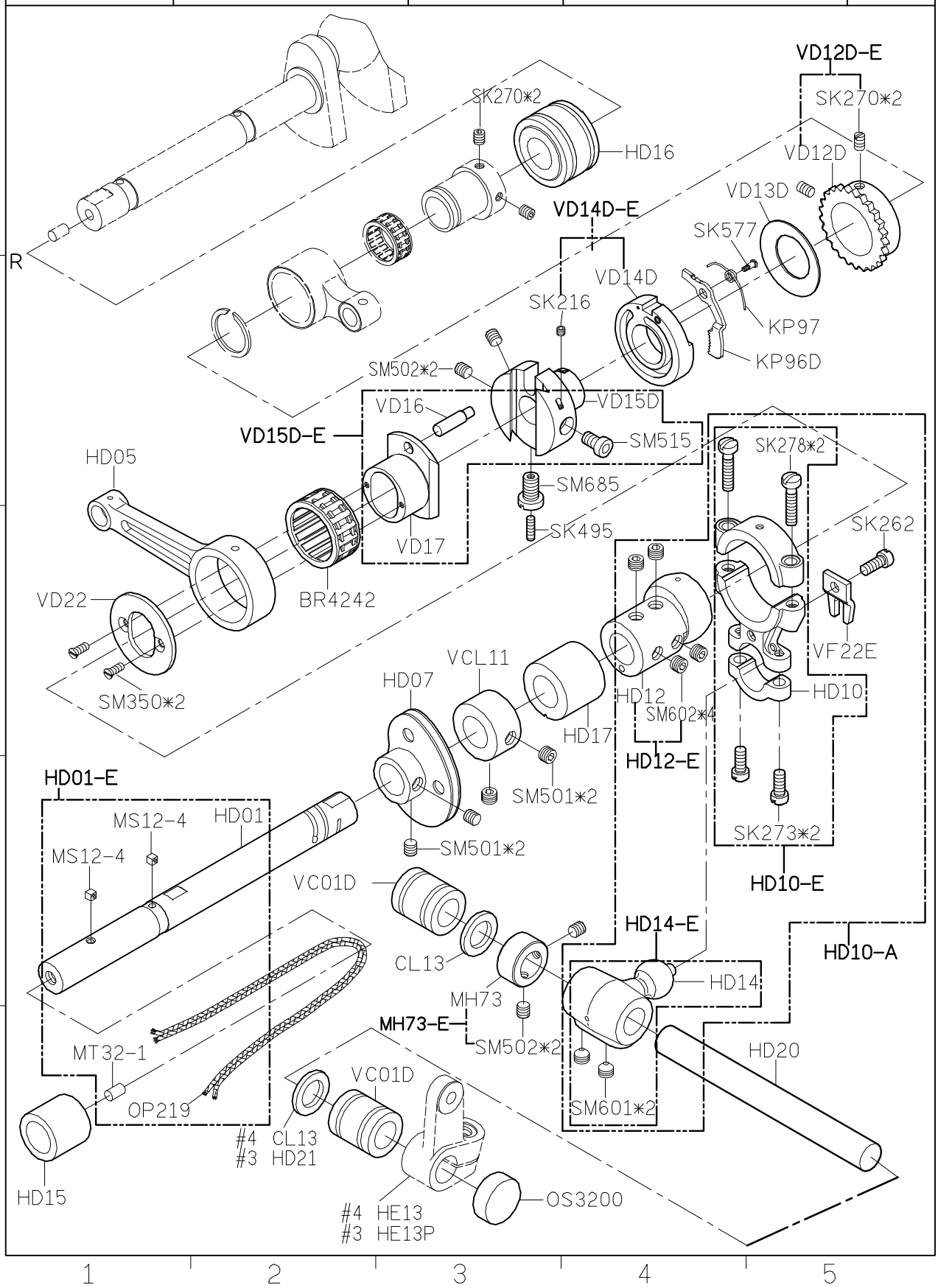

SIRUBA PARTS LIST	Series	Parts Group	Subclass / Remark	Page
	HF008	HE		1/4
				Date
				2013/08/30

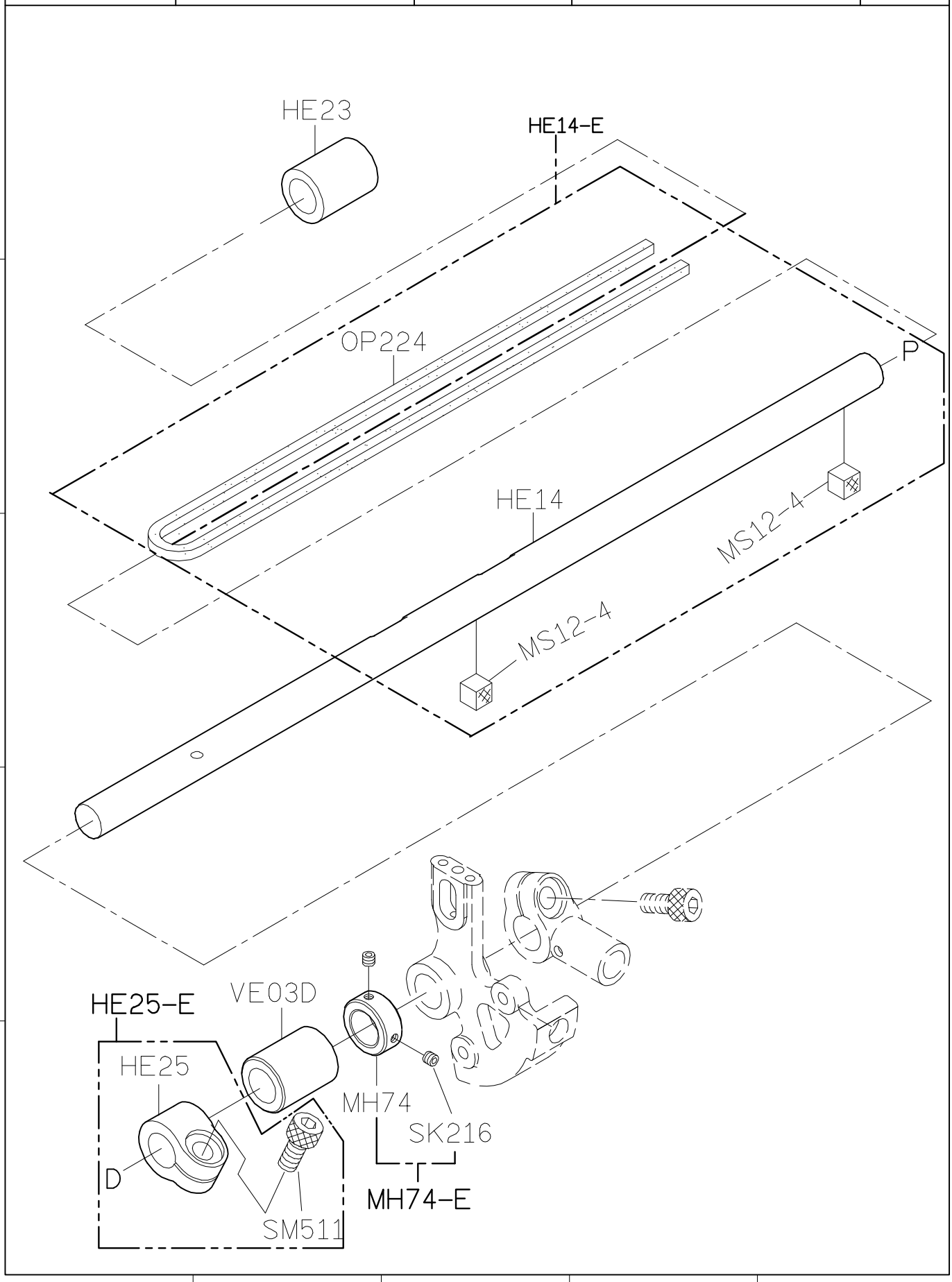

SIRUBA PARTS LIST	Series	Parts Group	Subclass / Remark	Page
	HF008	HE		2/4
				Date
				2012/09/17

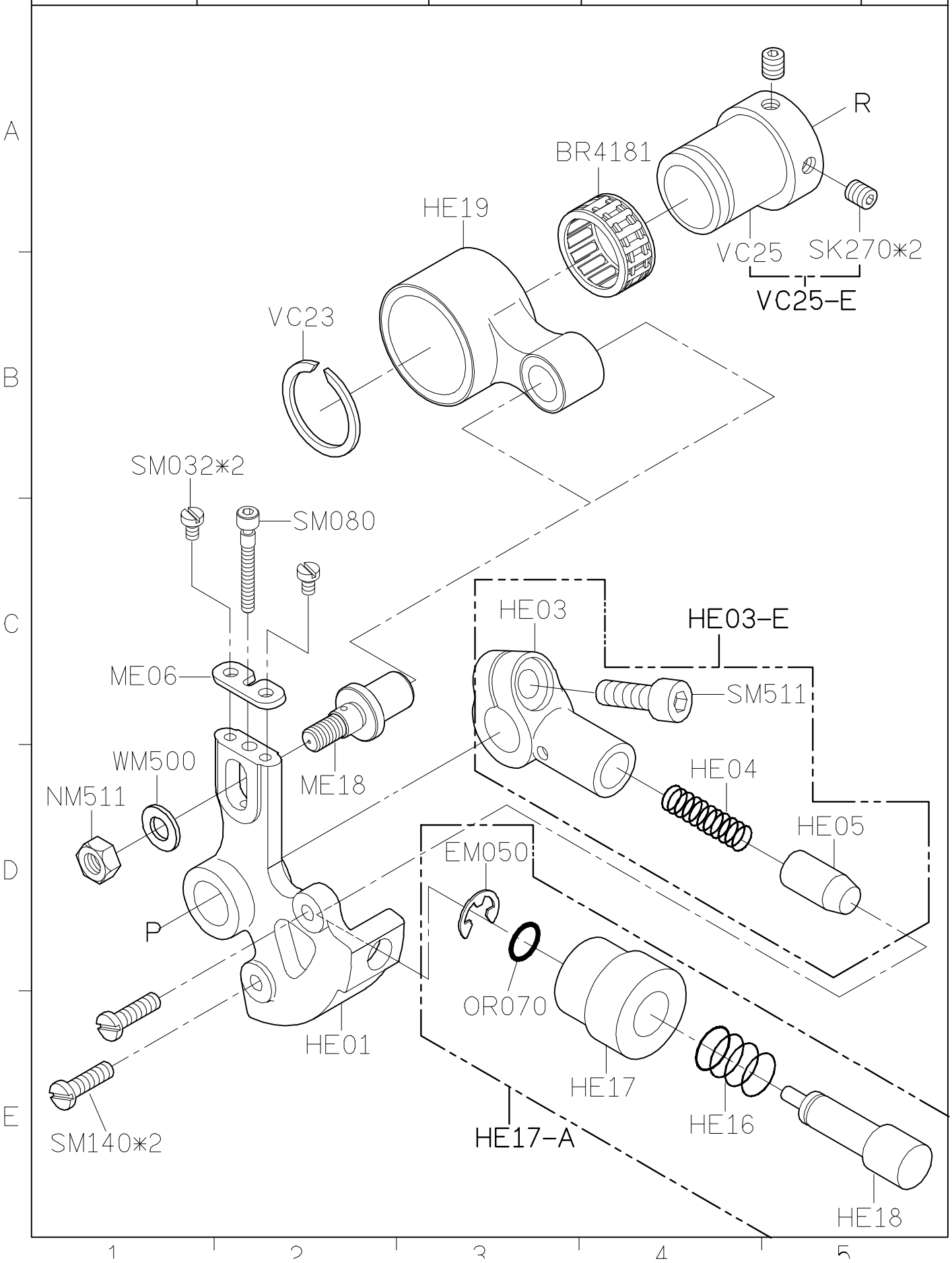

SiRUBA PARTS LIST	Series	Parts Group	Subclass / Remark	Page
	HF008	HE		3/4
				Date
				2022/11/14

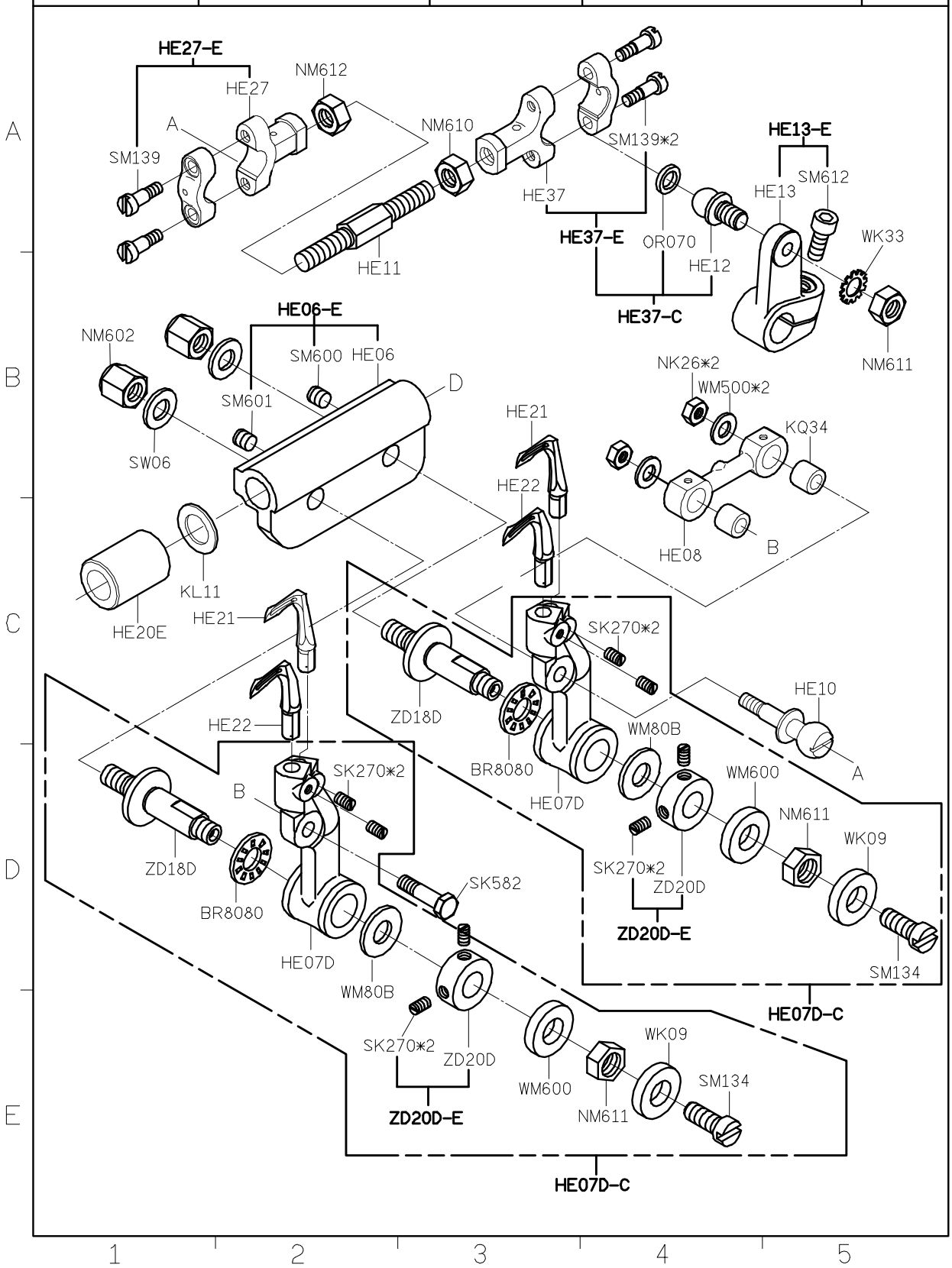

SiRUBA PARTS LIST	Series	Parts Group	Subclass / Remark	Page
	HF008	HE		4/4
				Date
				2012/08/25

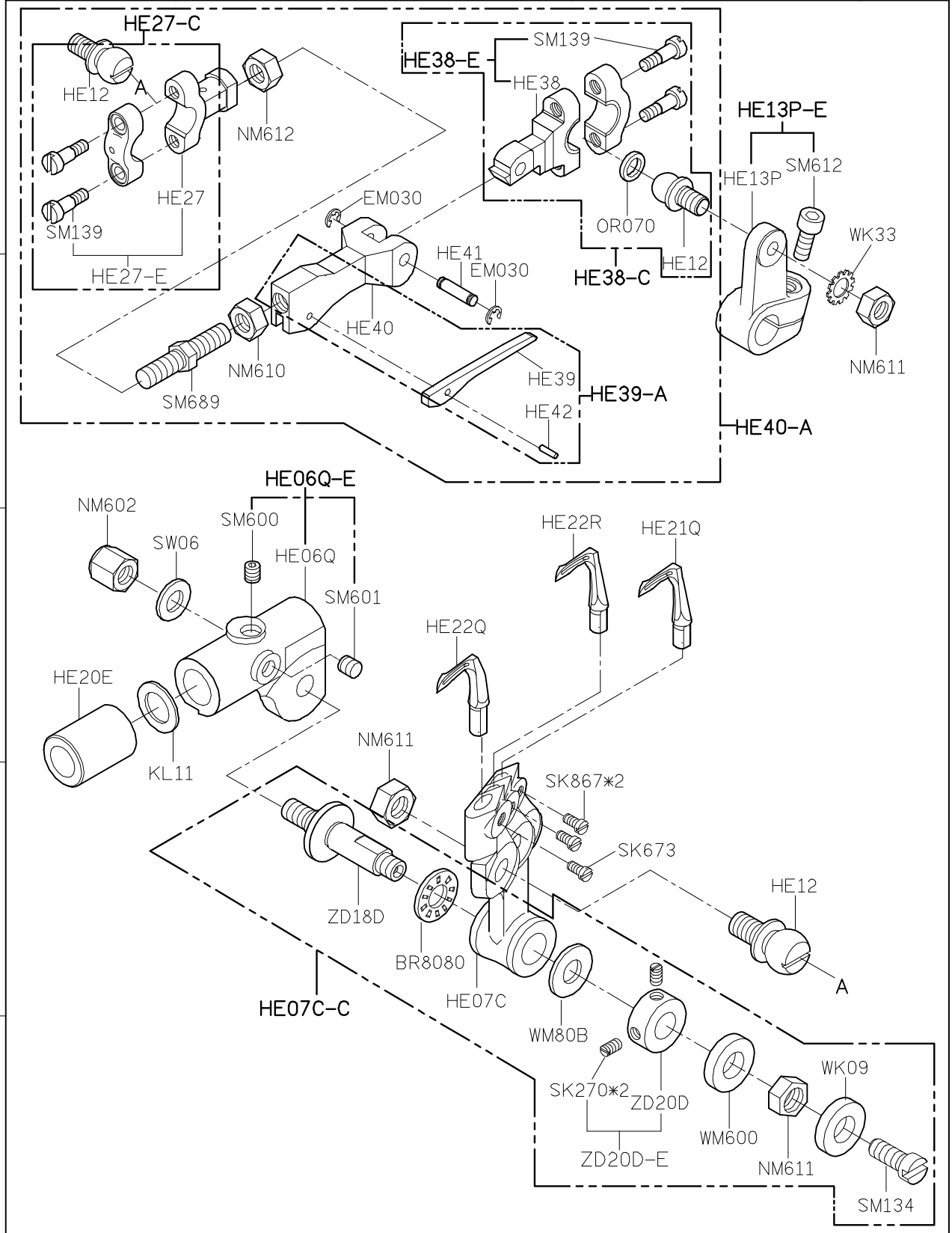

SIRUBA PARTS LIST	Series	Parts Group	Subclass / Remark	Page
	HF008	HF		1/1
				Date
				2023/03/13

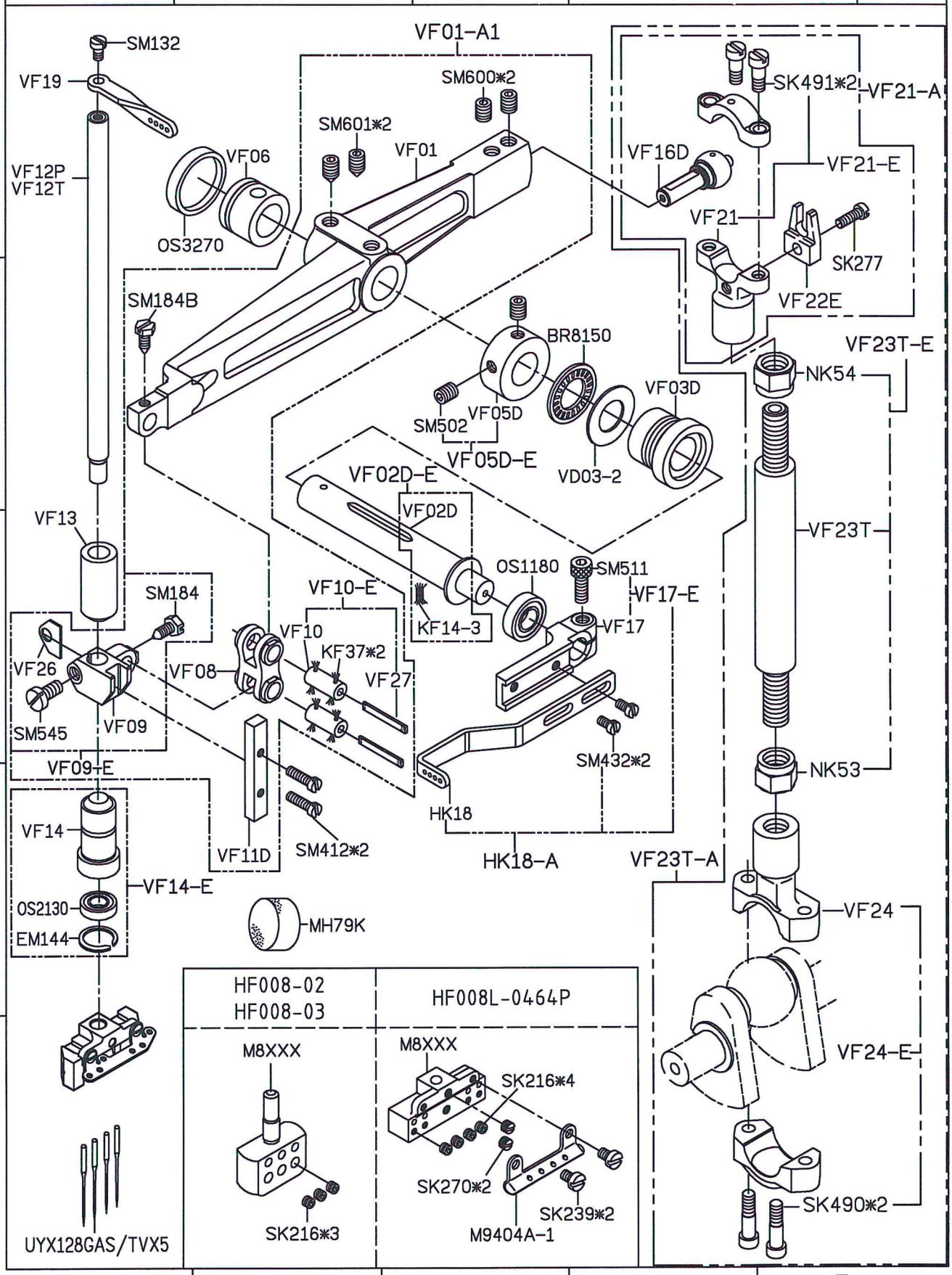

SIRUBA PARTS LIST	Series	Parts Group	Subclass / Remark	Page
	HF008	HJ		1/1
				Date
				2020/03/24

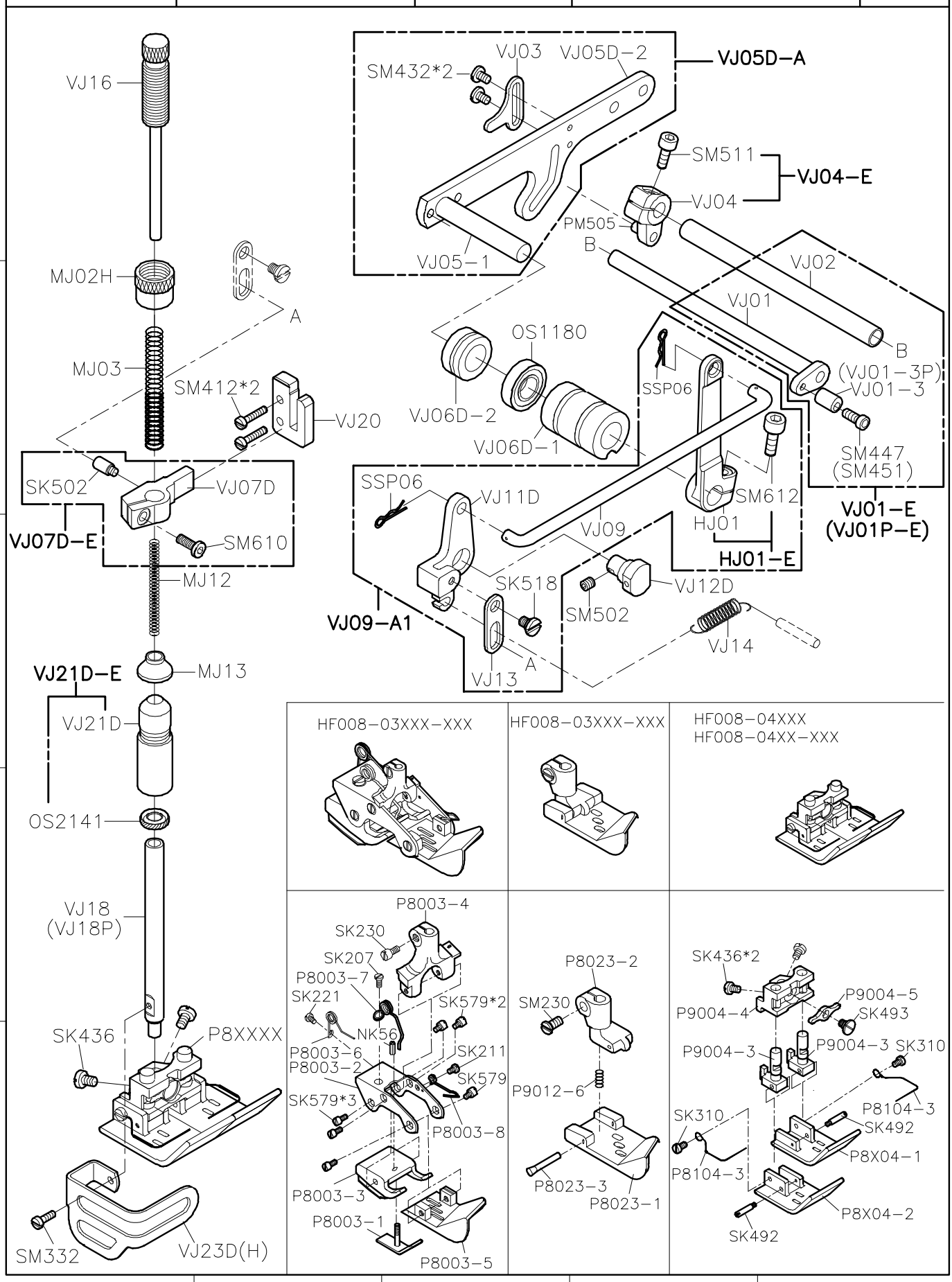

SiRUBA PARTS LIST	Series	Parts Group	Subclass / Remark	Page
	HF008	HK		1/2
				Date
				2020/04/15

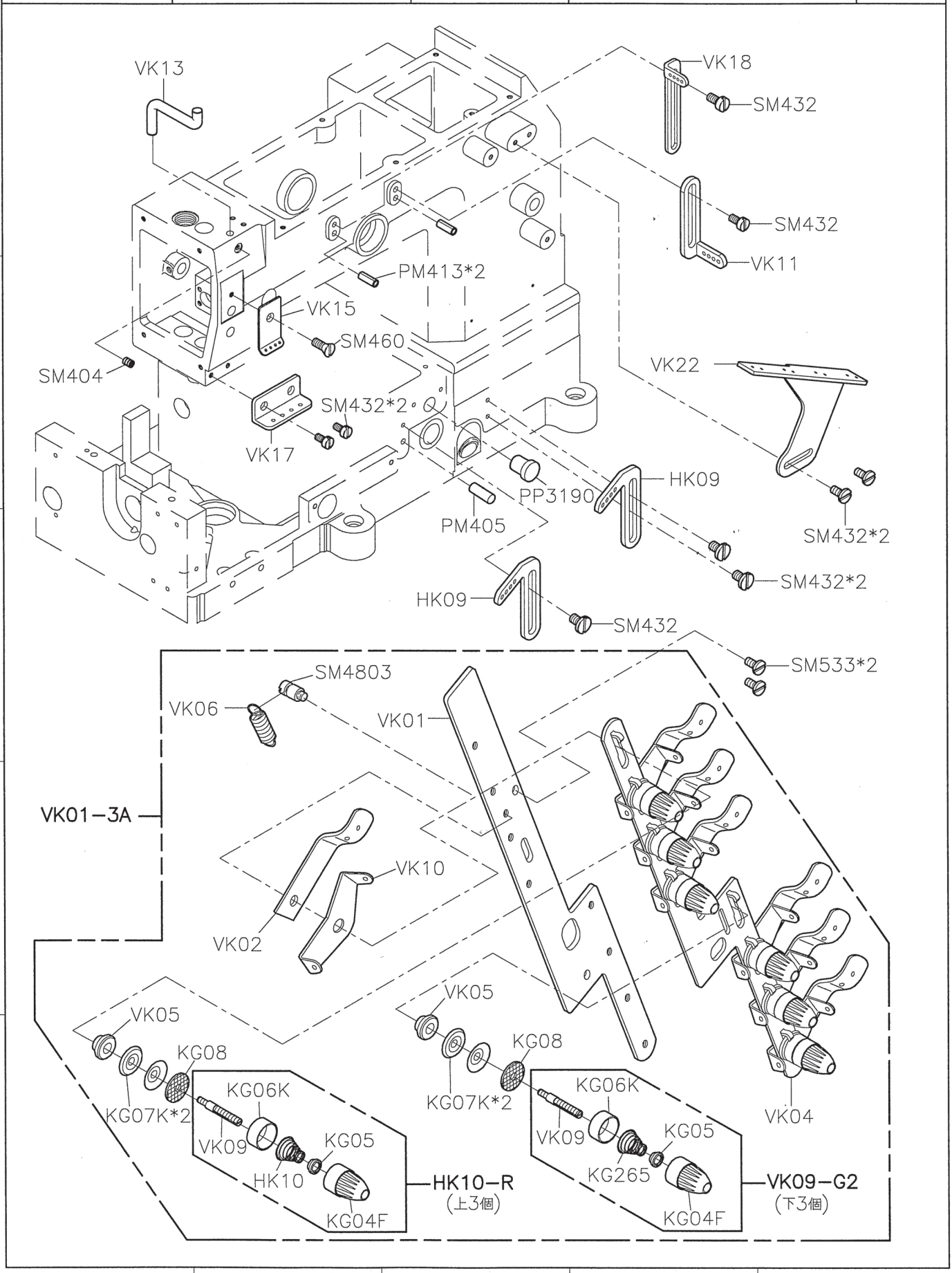

SiRUBA PARTS LIST	Series	Parts Group	Subclass / Remark	Page
	HF008	HK		2/2
				Date
				2012/08/25

HK01-A

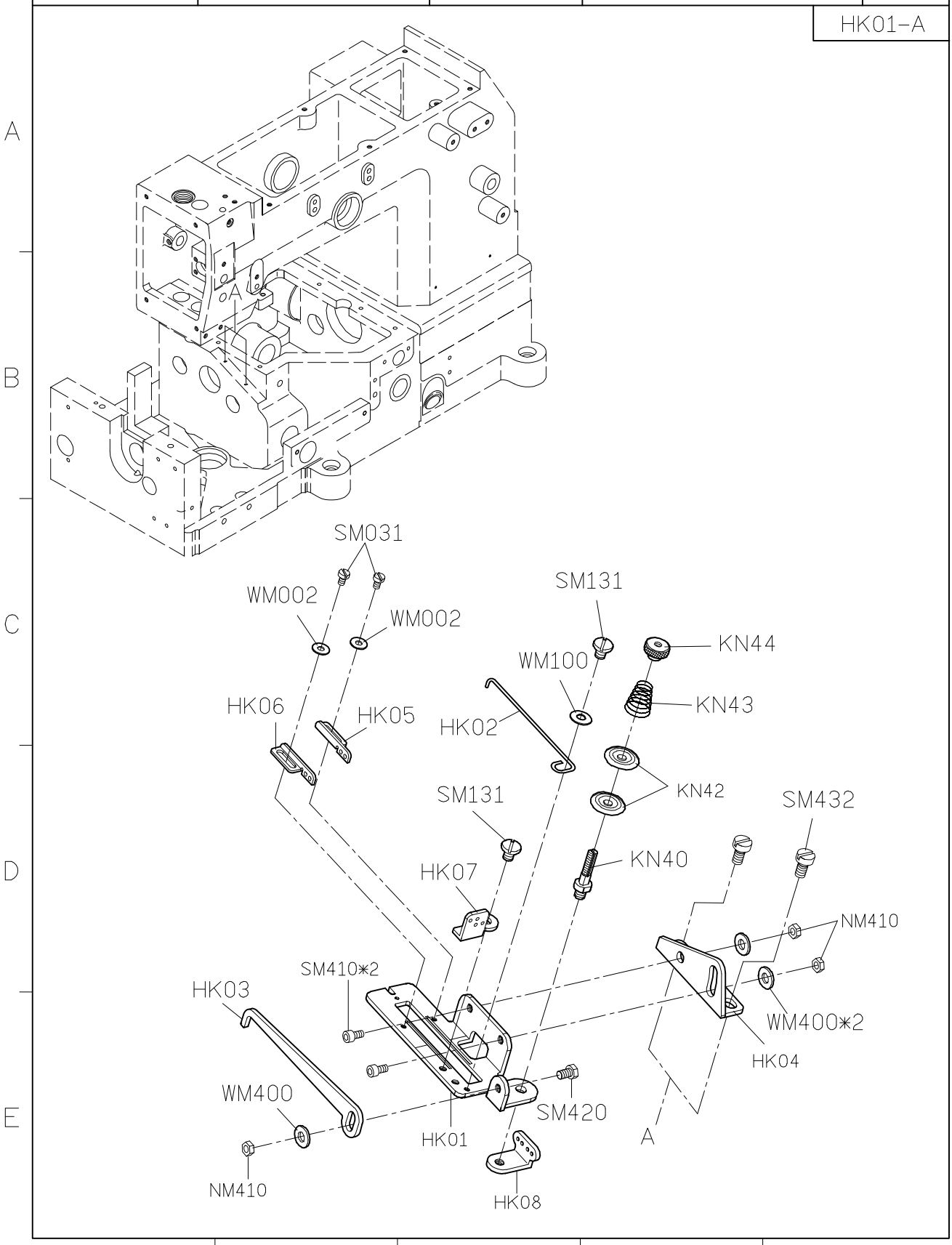

SIRUBA PARTS LIST	Series	Parts Group	Subclass Remark	Page
	HF008	HL		1/1
				Date
				2022/03/29

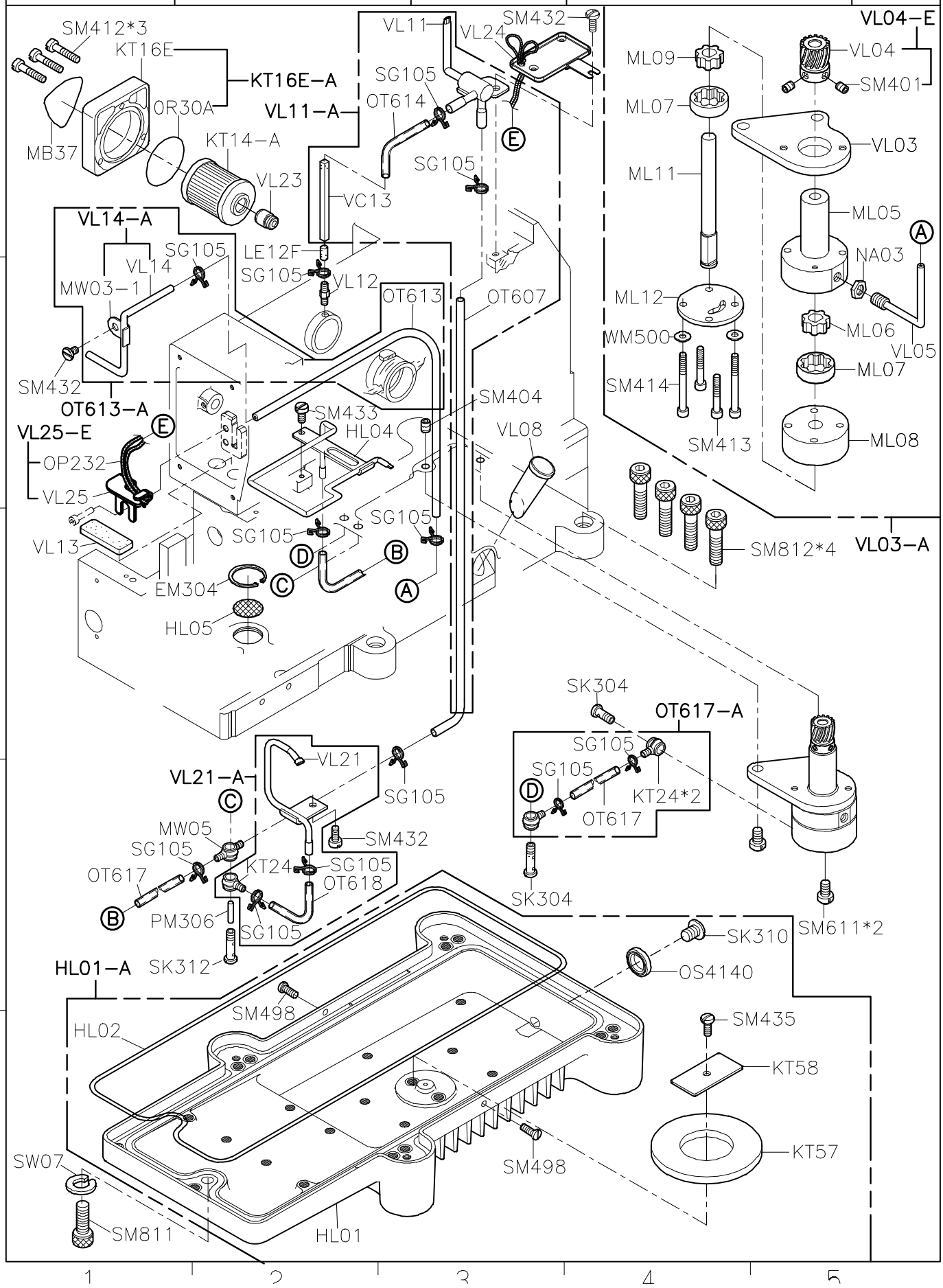

SIRUBA PARTS LIST	Series	Parts Group	Subclass / Remark	Page
	HF008	HN		1/2
				Date
				2015/11/06

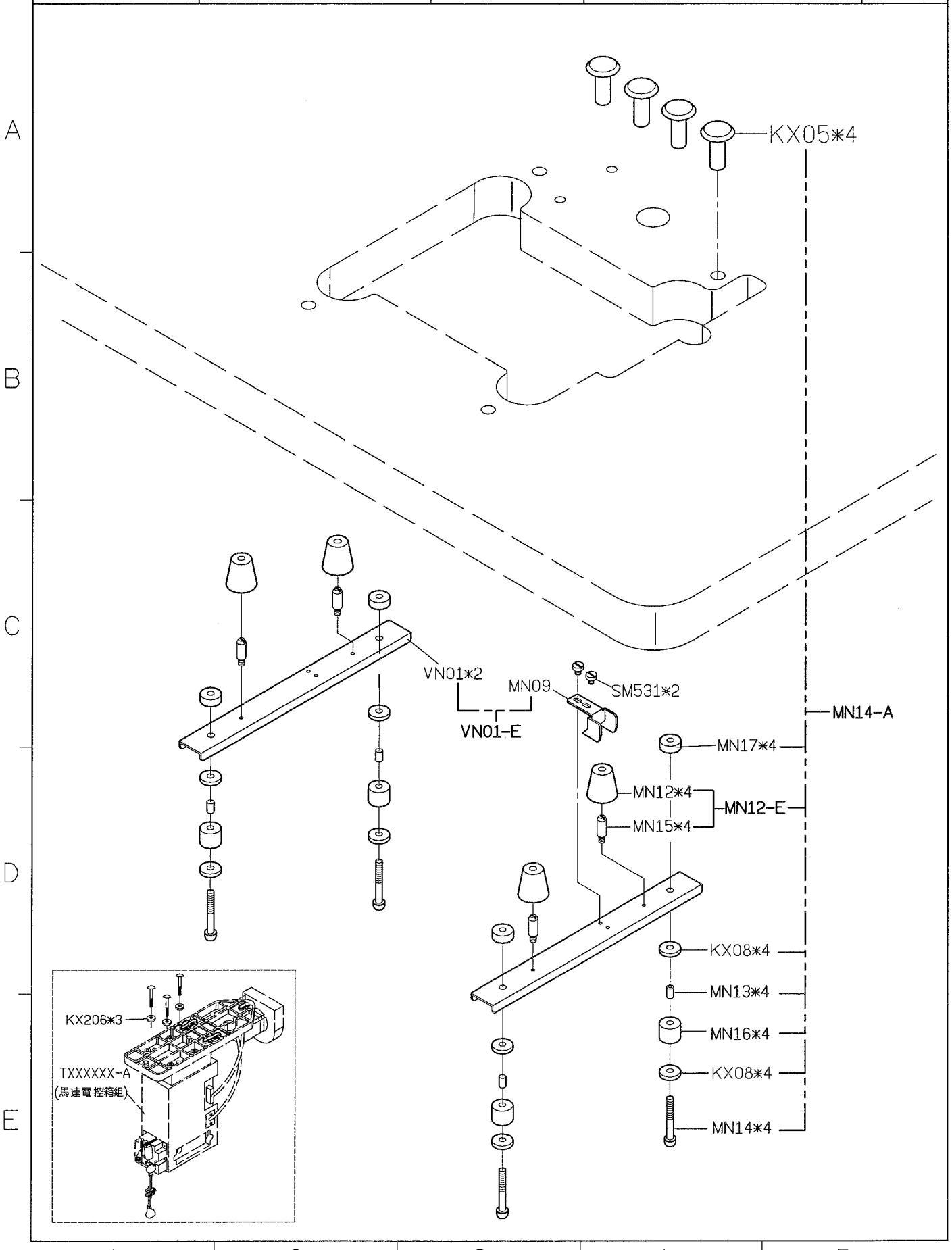

SiRUBA PARTS LIST	Series	Parts Group	Subclass / Remark	Page
	HF008	HN		2/2
				Date
				2017/01/19

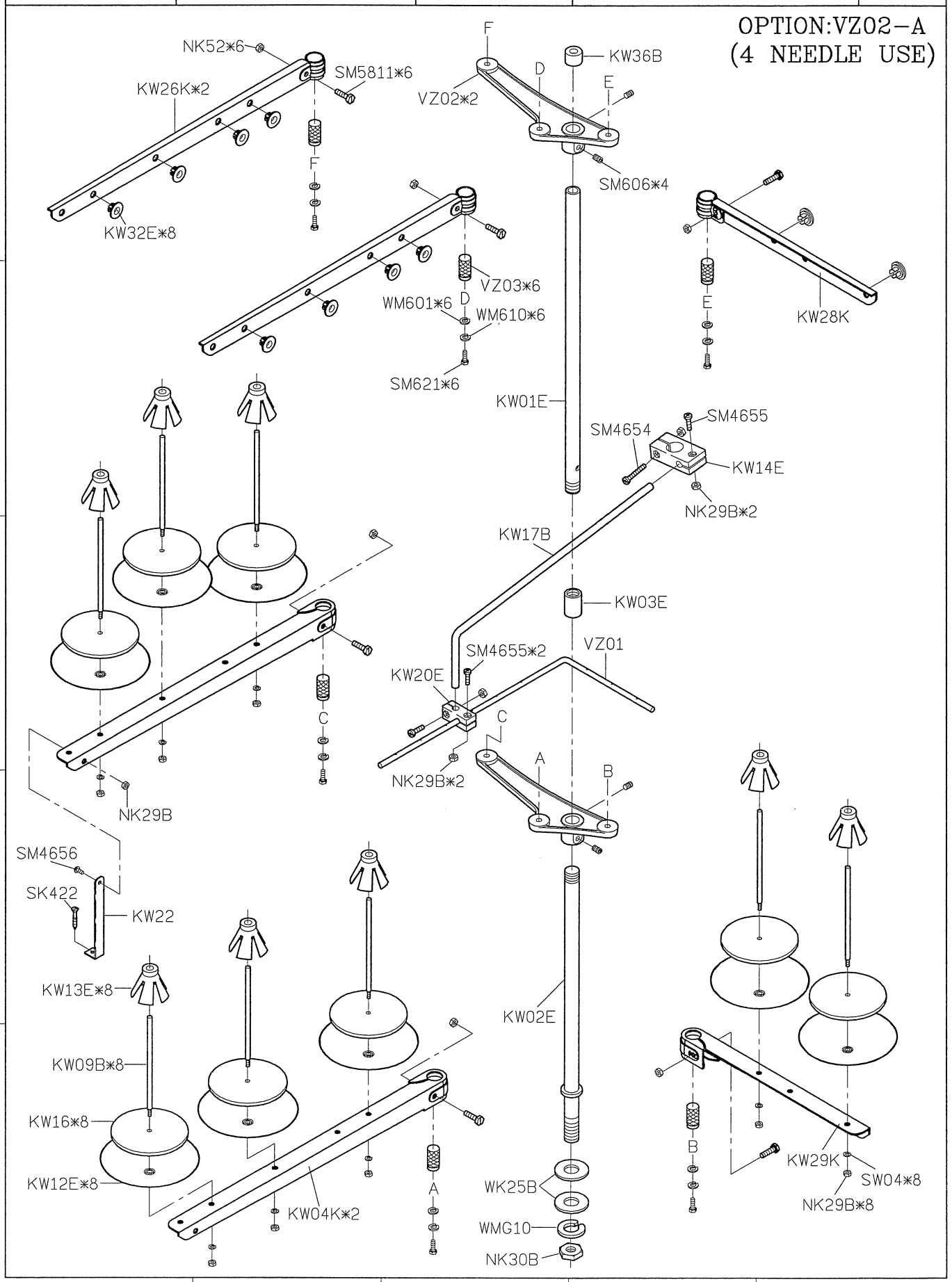

SiRUBA PARTS LIST	Series	Parts Group	Subclass / Remark	Page
	HF008	HY		1/2
				Date
				2018/07/31

MY01
防塵罩

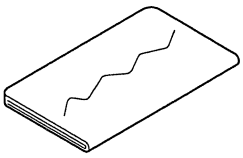

KT14-A
濾油器

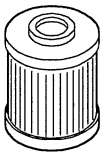

KY02F-A
油　罐

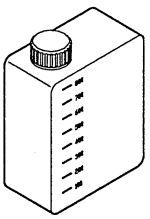

KY03
油　壺

KY04
漏　斗

KY14
內六角螺絲起子

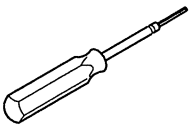

KY18
鑷　子

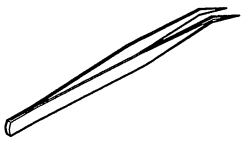

KY201JK
工具袋

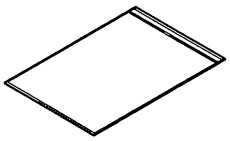

KY21-E
鉤　子

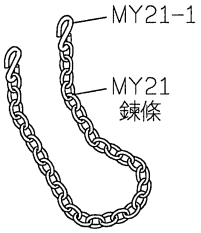

KZ03
乾燥劑

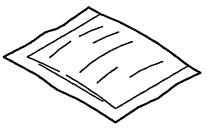

LY33
一字起子

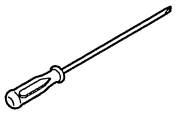

SiRUBA PARTS LIST	Series	Parts Group	Subclass / Remark	Page
	HF008	HY		2/2
				Date
				2018/07/31

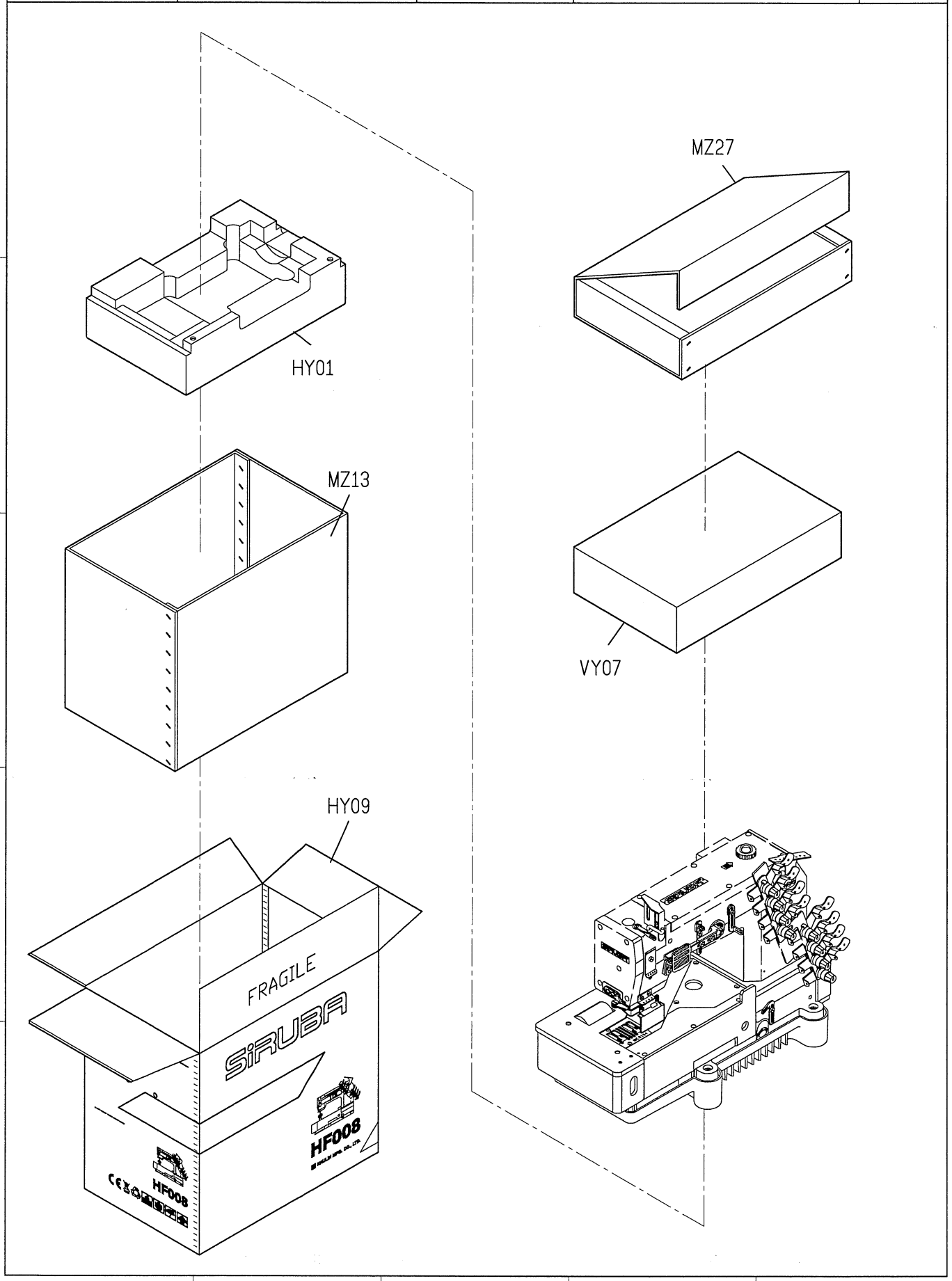

SIRUBA TABLE CUT - OUT	Series	Item Code	Subclass Remark	Mounting
	HF008 HF008A	HF008-T1		Semi-submerged
				Date
				2019/05/22

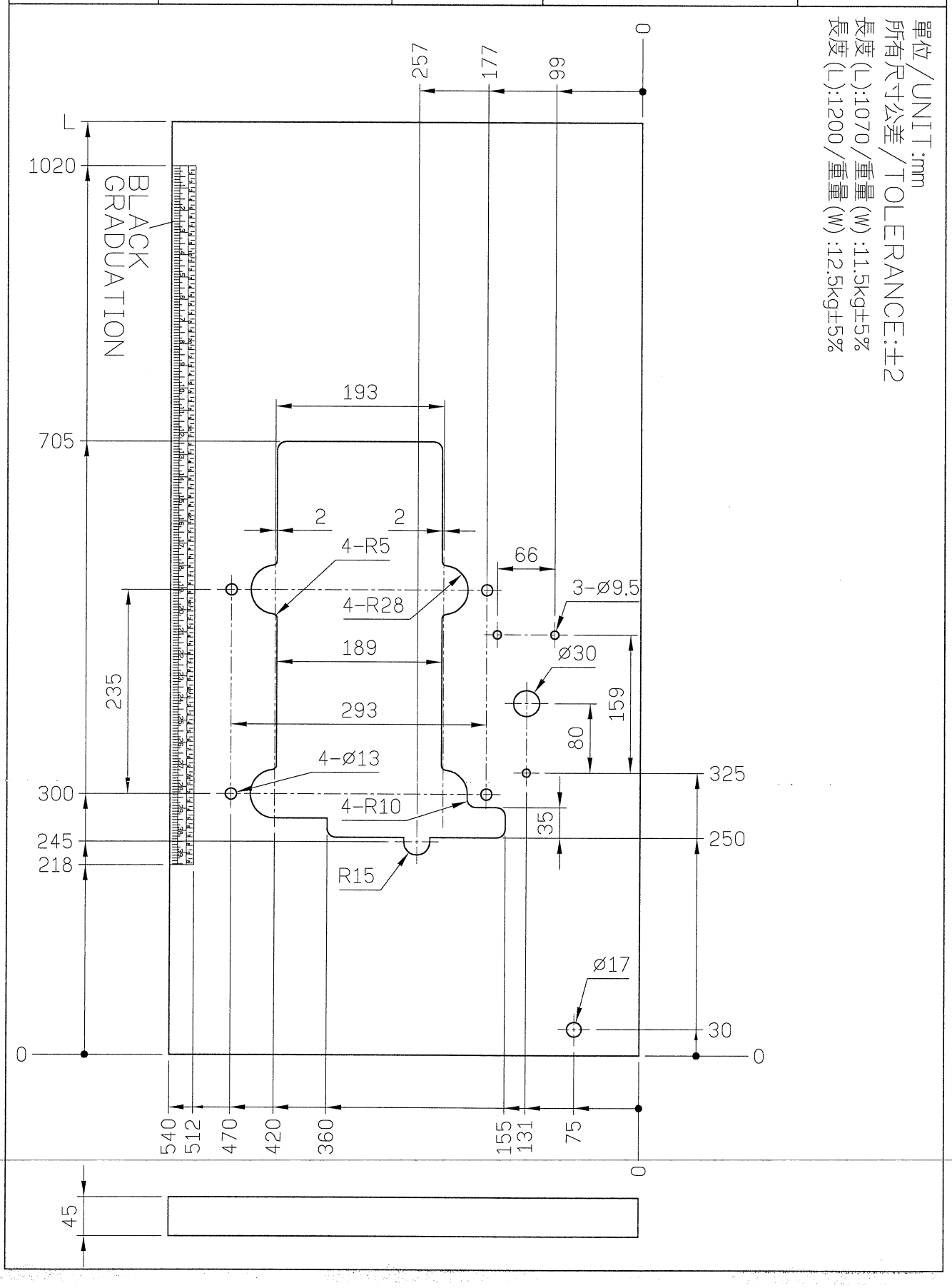

SIRUBA TABLE CUT - OUT	Series	Item Code	Subclass Remark	Mounting
	HF008 HF008A	HF008-T3		Fully-submerged
				Date
				2019/05/22

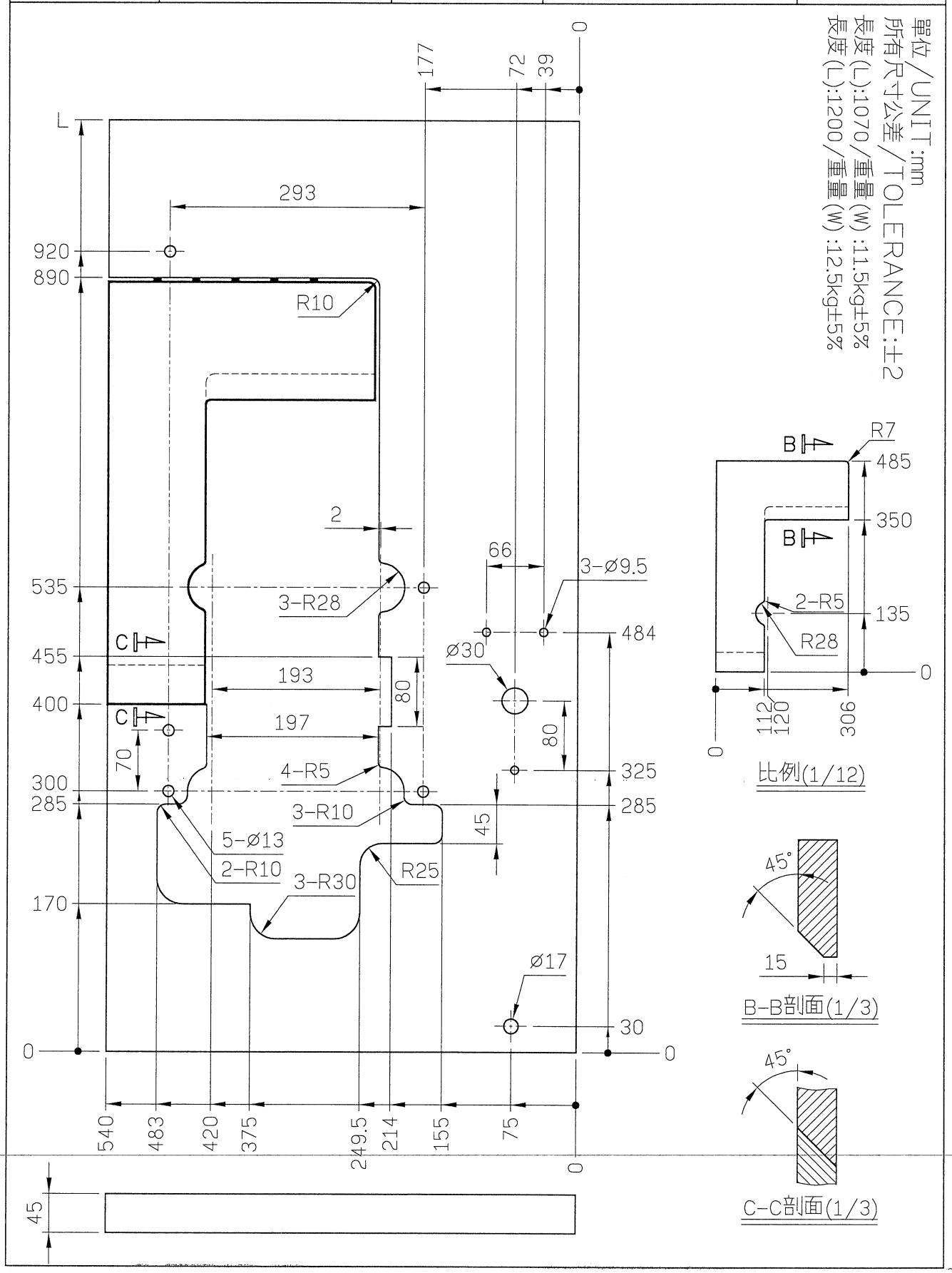
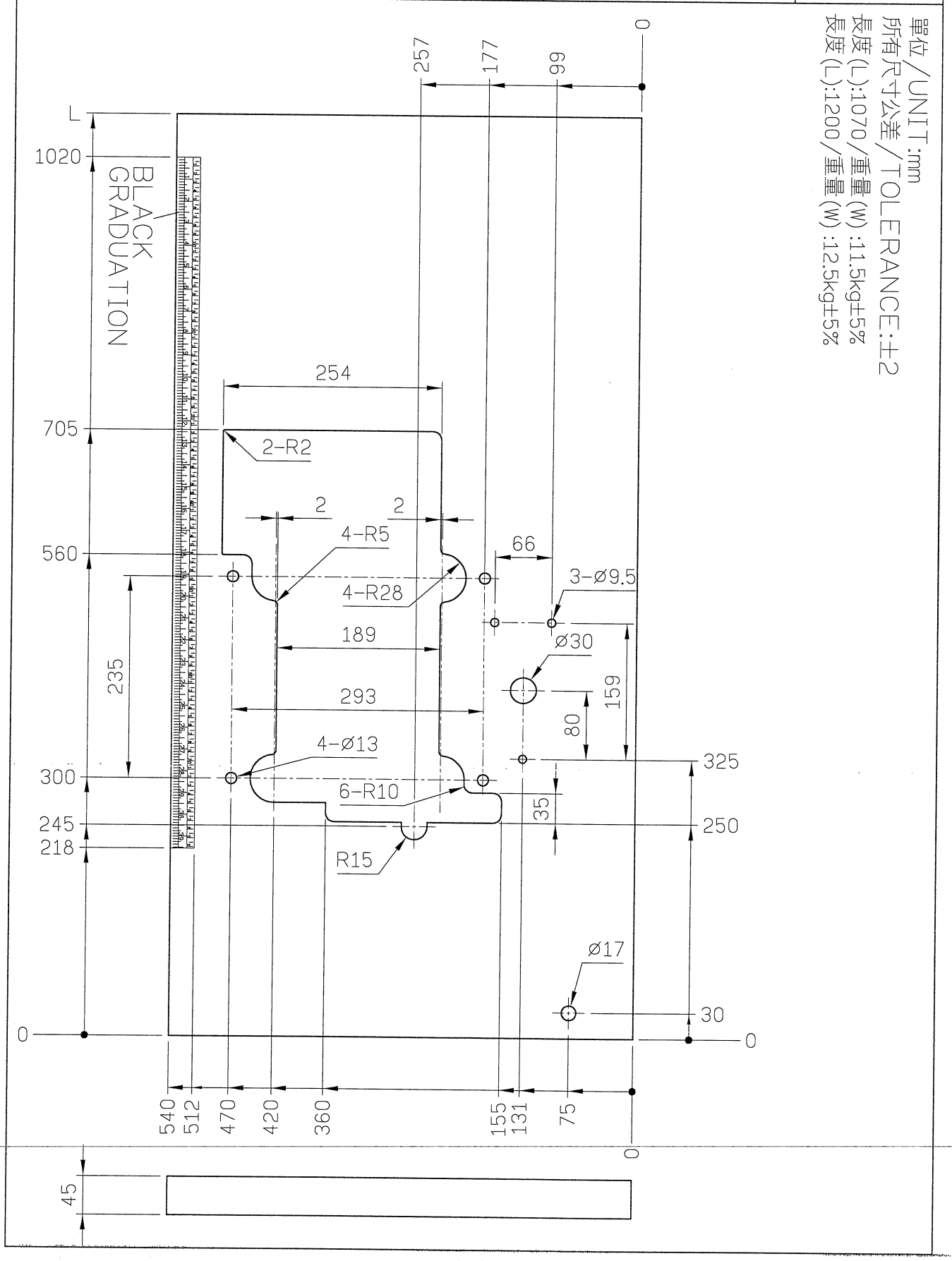
SIRUBA TABLE CUT - OUT	Series	Item Code	Subclass Remark	Mounting
	HF008 HF008A	HF008-T4	For FBQ	Semi-submerged
				Date
				2019/05/22