PARTS BOOK

FOUR-HEAD AUTOMATIC EMBROIDERY MACHINE

SWF®

PME-050525

SUNSTAR PRECISION CO., LTD.

Machine Layout

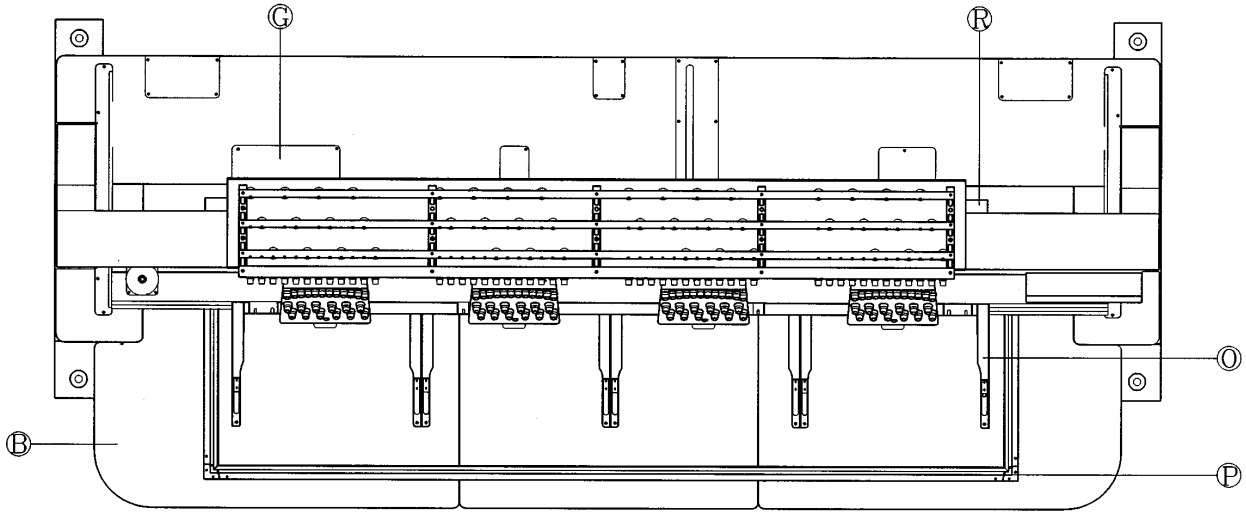

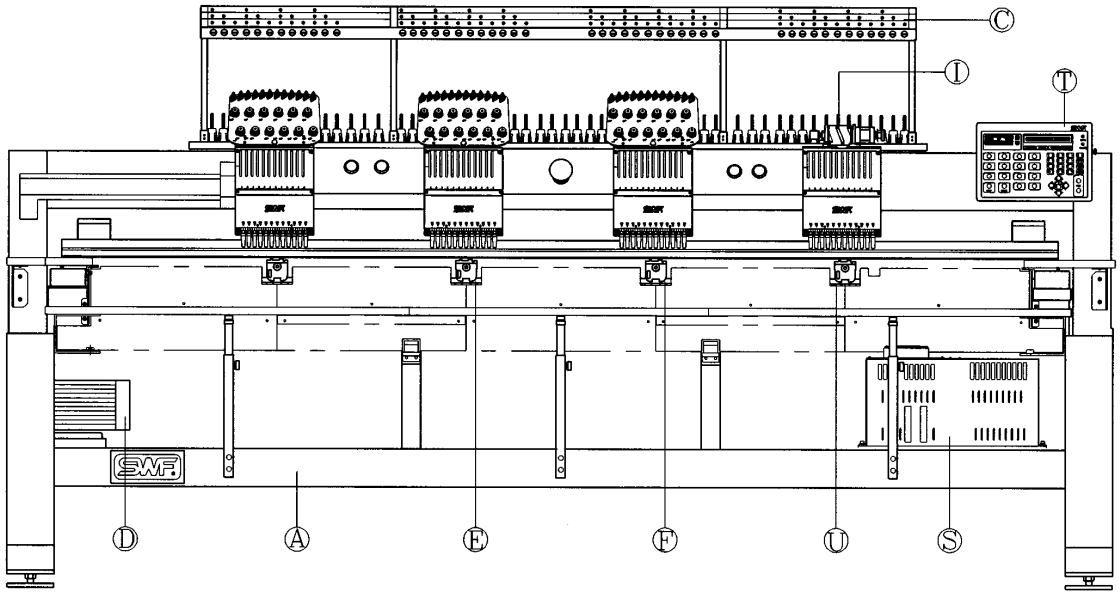

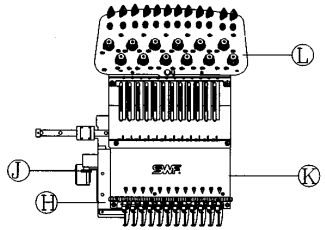

SWF®

CONTENT

A	Machine Body Ass'y	7
B	Work Table	9
C	Spool Stand	11
D	Main Drive System	13
E	Bed Ⅰ	17
F	Bed Ⅱ	19
G	Thread Cutting System	21
H	Arm Ⅰ	23
H1	Arm Ⅱ	27
H2	Arm Ⅲ	29
I	Color Change Set	31
J	Wiper Set	33
K	Head	37
L	Thread Tension Unit	41
M	X-Axis Drive Set	45
N	Y-Axis Drive Set	49
O	Tubular Frame	53
P	Border Frame	55
Q	S/B Switch Unit	57
R	Sub-Control Unit & Lamp	59
S	Main Controller	61
T	Operation Unit	63
U	Bobbin Winder	65

A

Machine Body Ass'y

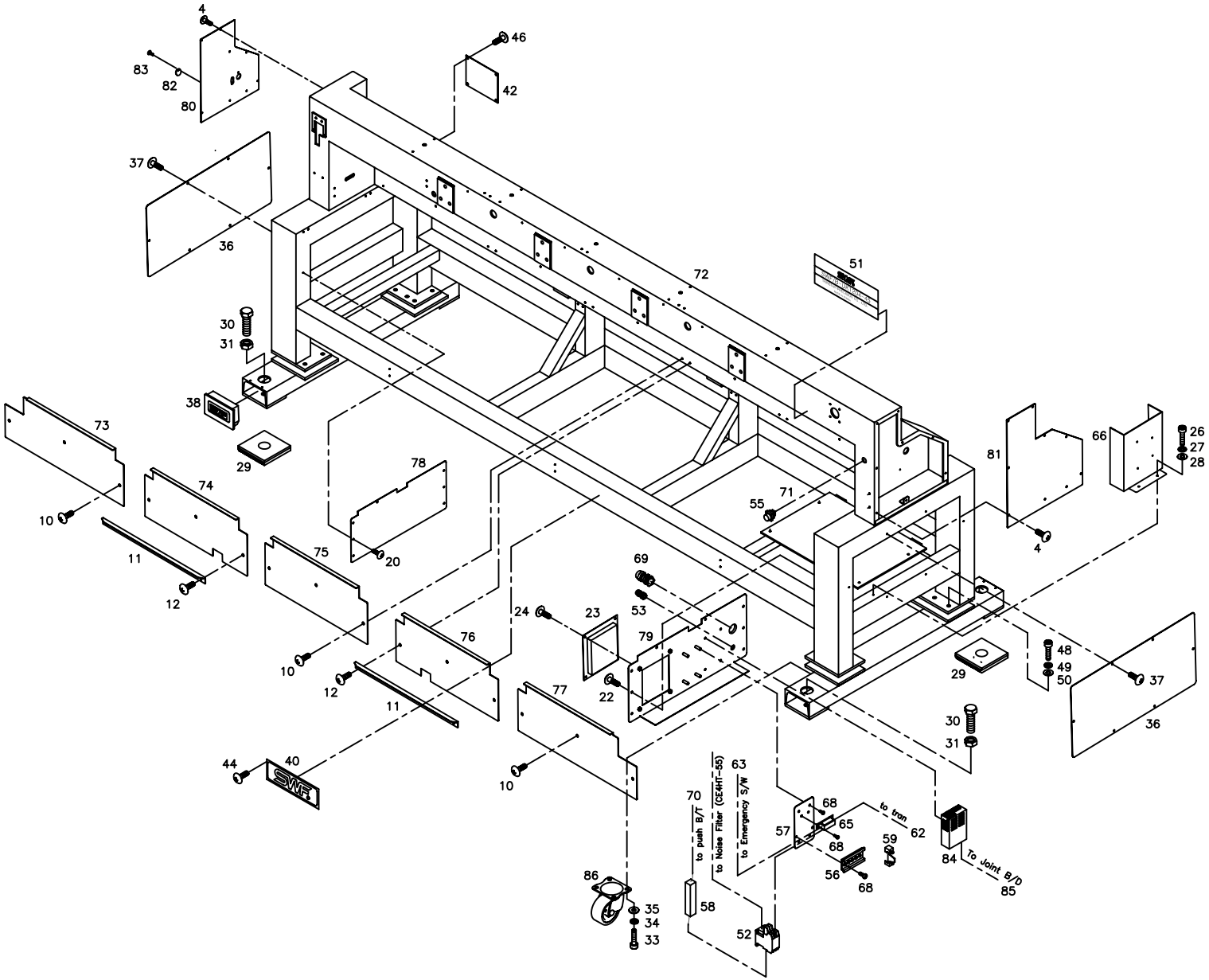

Ref. No	Part No.	Part Names	Q'ty
A-004	02044SC-3123	Truss Screw (M5*L8)	17
A-010	02044SC-3123	Truss Screw (M5*L8)	2
A-011	17087CW-UK01	Table Support Angle	4
A-012	02044SC-3123	Truss Screw (M5*L8)	1
A-020	02044SC-3123	Truss Screw (M5*L8)	7
A-022	02044SC-3123	Truss Screw (M5*L8)	8
A-023	02088PR-UK01	Power Switch Cover	4
A-024	02010SC-3123	Truss Screw (M4*L8)	4
A-026	02015SC-7113	Hex.Socket Bolt(M4*L10)	2
A-027	02028SW-9115	Spring Washer (@4)	2
A-028	05009SW-1111	Washer (@4-L)	2
A-029	01002LA-UK01	Leveling Base Ass'Y	4
A-030	01004SC-UK01	Hex. Bolt (M20*L60)	4
A-031	02036SN-1211	Hex. Nut (M20-No2)	4
A-033	08091SC-7113	Hex. Socket Bolt (M6*L20)	16
A-034	16014SW-4115	Spring Washer (@6)	16
A-035	08057SW-1111	Washer (@6)	16
A-036	02066PR-UK01	Body Side Cover	2
A-037	02044SC-3123	Truss Screw (M5*L8)	4
A-038	01022RB-UK01	Body Base Cover	1
A-040	02101ET-UK01	Brand Mark	1
A-042	02097ET-B001	Model Name Plate	4
A-044	02002SC-7119	Pluss Screw (M4*L8)	4
A-046	02010SC-3123	Truss Screw (M4*L8)	4
A-048	14003SC-4113	Hex. Socket Bolt (M8*L25)	16
A-049	15095SW-3115	Spring Washer (@8)	16
A-050	08041SW-1111	Washer (@8-S)	16
A-051	08000102UK41	MODEL MARK (B-UK604-45)	1
	08000104UK41	MODEL MARK (B-UK1204-45)	
	08000105UK41	MODEL MARK (B-UK1504-45)	
A-052	02000100T000	Magnetic Switch Set	1
A-053	02000400T000	Cable Grand (Dacl-11)	1
A-055	02000700T000	Push B/T Switch	1
A-056	02000910T000	Magnetic S/W Fixed Bracket	1
A-057	02001100T000	Switch Plate	1
A-058	02001200T000	Resister 5/20W (Ce)	1
A-059	02001300T000	Bracket Stopper (Ce)	2
A-062	02105800E040	Magnetic - Emt24 Trans	1
A-063	02105900E040	Emt24 Trans Output - Emergen	1
A-065	05000210T000	Transformer (Emt25V) 1A/25.5V	1

Ref. No	Part No.	Part Names	Q'ty
A-066	07000100U000	Main Switch Box	1
A-068	02010SC-3123	Truss Screw (M4*L8)	8
A-069	02000600T000	Cable Grand (Dapg-36)	1
A-070	02105600U040	I/O S/W - Magnetic Contactor	1
A-071	02105700U020	I/O Switch Connect Cable	1
A-072	01000100UK41	Beam & Body (Ass'Y)	1
A-073	01000200UK00	Body Front Cover (A)	1
A-074	01000300UK00	Body Front Cover (B)	1
A-075	01000400UK00	Body Front Cover (C)	1
A-076	01000500UK00	Body Front Cover (D)	1
A-077	01000600UK00	Body Front Cover (E)	1
A-078	01000800UK00	Body Inside Cover (A)	1
A-079	01000900UK00	Body Inside Cover (B)	1
A-080	01001200UK00	Beam Bracket Cover(L)	1
A-081	01001300UK00	Beam Brackt Cover(R)	1
A-082	02054PR-A001	Main Motor Pulley Cover	1
A-083	02044SC-3123	Truss Screw (M5*L8)	1
A-084	02001500U000	Jump Smps (Mrk0R4-H)	1
A-085	02106300U000	Sh-63	1
A-086	01000100UH80	HAMMER CASTER SET (URETHANE)	4

B

Work Table

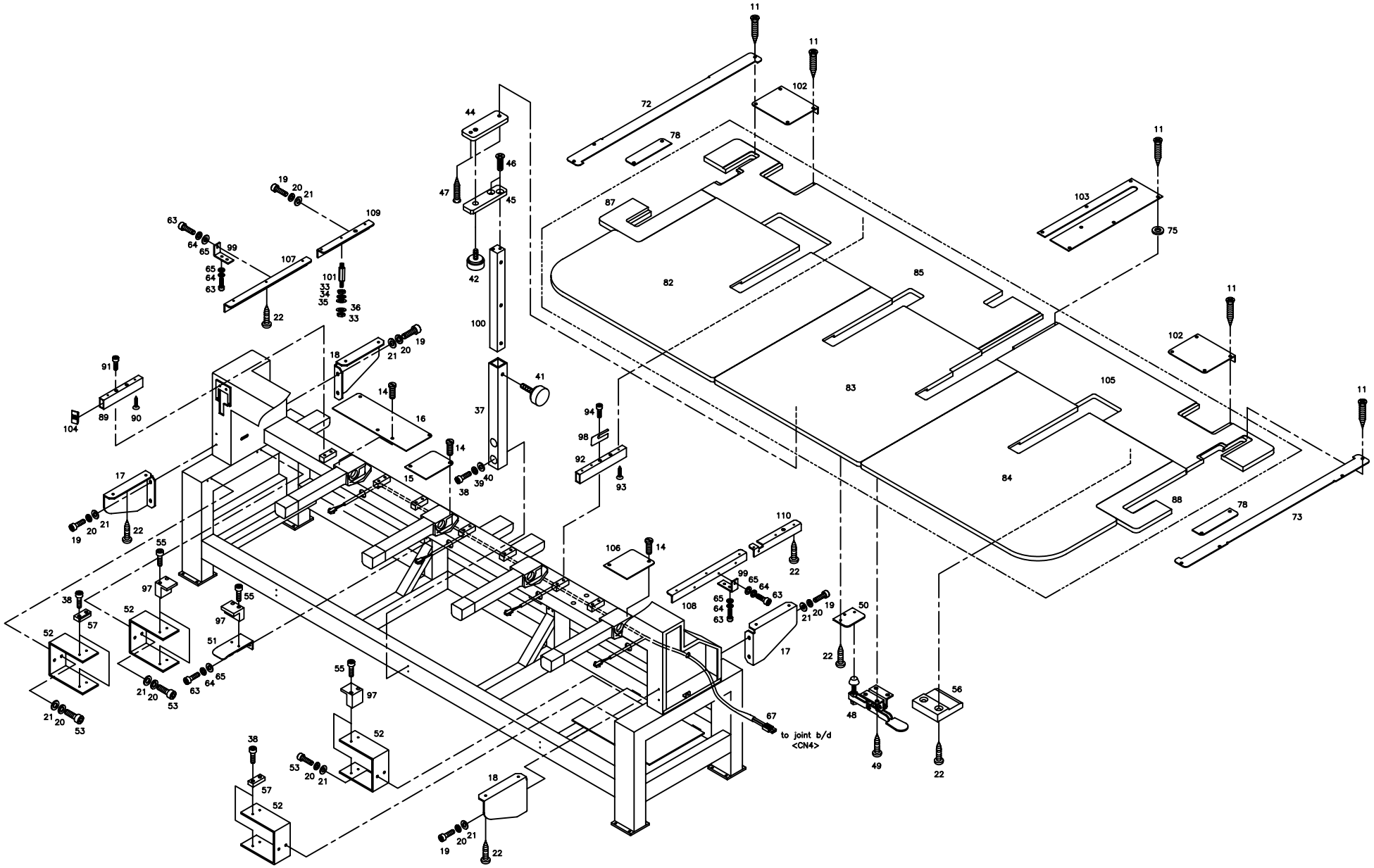

Ref.No	Part No.	PartNames	Q'ty
B-011	08101SC-8329	Tapping Screw (M3*L16)	27
B-014	02030SC-T121	Bed Cover Screw(9/64" 40)	10
B-015	16016PR-UK01	Gear Cover	1
B-016	16018PR-UK01	Mes Cam Driving Box Cover	1
B-017	16020PR-UK01	Front Table Support (L)	2
B-018	16025PR-UK01	Front Table Support (R)	2
B-019	08076SC-7113	Hex. Socket Bolt (M5*L12)	14
B-020	18048SW-3115	Spring Washer (@5)	24
B-021	16018SW-1111	Washer (@5)	24
B-022	16009SC-8330	Tapping Screw (M6*L20)	71
B-033	04032SN-A001	Hex. Nut (M8-No2)	8
B-034	15095SW-3115	Spring Washer (@8)	4
B-035	04030SW-A001	Stud Bolt Washer(L) (@8)	4
B-036	04029SW-A001	Stud Bolt Washer(S) (@8)	4
B-037	16052AD-UK01	Table Support Guide	3
B-038	02015SC-7113	Hex.Socket Bolt(M4*L10)	14
B-039	02028SW-9115	Spring Washer (@4)	6
B-040	05009SW-1111	Washer (@4-L)	6
B-041	17062SC-UK01	Table Support Stopper Screw	3
B-042	17063SC-UK01	Table Support Stopper Screw	3
B-044	16061PR-UK01	Table Support Plate (A)	3
B-045	16058AD-UK01	Table Support Plate (B)	3
B-046	15089SC-7119	C.S Screw (M4*L12)	6
B-047	17012SC-8329	Hex. Socket Set Screw(M4*L16)	6
B-048	16067ET-UK01	Table Toggle Clamp	8
B-049	19002SC-1330	Tapping Screw (4*L16-No1)	32
B-050	16065PR-UK01	Clamp Plate	4
B-051	17073PR-UK01	Table Support Angle "F"	2
B-052	17077PR-UK01	Table Fixing Plate	4
B-053	08062SC-7113	Hex. Socket Bolt (M5*L20)	8
B-055	05014SC-7113	Hex. Socket Bolt (M4*L25)	12
B-056	16063PM-UK01	Table Holding Block	7
B-057	17085PM-UK01	Positioning Block	4
B-063	08076SC-7113	Hex. Socket Bolt (M5*L12)	12
B-064	18048SW-3115	Spring Washer (@5)	12
B-065	16018SW-1111	Washer (@5)	12
B-067	25025EL-UK01	Picker Sol. Connecting/ 4Ht-25	1
B-072	05000600UH01	Lm Guide Cover (L) L=693	1
B-073	05000700UH01	Lm Guide Cover (R) L=693	1
B-075	10000310A000	Washer T=0.3,0.5,0.8,1.2,1.6	30

Ref. No	Part No.	Part Names	Q'ty
B-078	05001400UH00	Belt Cover	2
B-082	05000500UK40	Table "A"	1
B-083	05000600UK40	Table "B"	1
B-084	05000700UK40	Table "C"	1
B-085	05000110UK40	Fixed Table "A"	1
B-087	05000310UK40	Fixed Table "C"	1
B-088	05000410UK40	Fixed Table "D"	1
B-089	05001100UK40	Table Support Angle (B) L160	1
B-090	16009SC-8330	Tapping Screw (M6*L20)	2
B-091	14002SC-7113	Hex.Socket Bolt (M6*L15)	2
B-092	05001000UK40	Table Support Angle (C)L266.5	7
B-093	16009SC-8330	Tapping Screw (M6*L20)	14
B-094	14002SC-7113	Hex.Socket Bolt (M6*L15)	14
B-097	05008100UK40	Table Fixing Block	6
B-098	05001700U000	Table Support Plate	16
B-099	05001500UK40	Angle Support	4
B-100	05001300U000	Table Support L=263	3
B-101	05001600U000	Table Support Stud	4
B-102	05000810UH01	Y-Motor Cover	2
B-103	05001310UH00	Rail Guide Table Cover L352	1
B-104	GP-003757-00	TABLE SUPPORT END CAP	16
B-105	05000220UK40	FIXED TABLE "B"	1
B-106	16016PR-UK01	GEAR COVER	1
B-107	16000100U000	TABLE SUPPORT ANGLE (A1)	1
B-108	16000200U000	TABLE SUPPORT ANGLE (D1)	1
B-109	05000920UH01	TABLE SUPPORT ANGLE (A)L250	1
B-110	05001120UH01	TABLE SUPPORT ANGLE (D)L250	1

C

Spool Stand

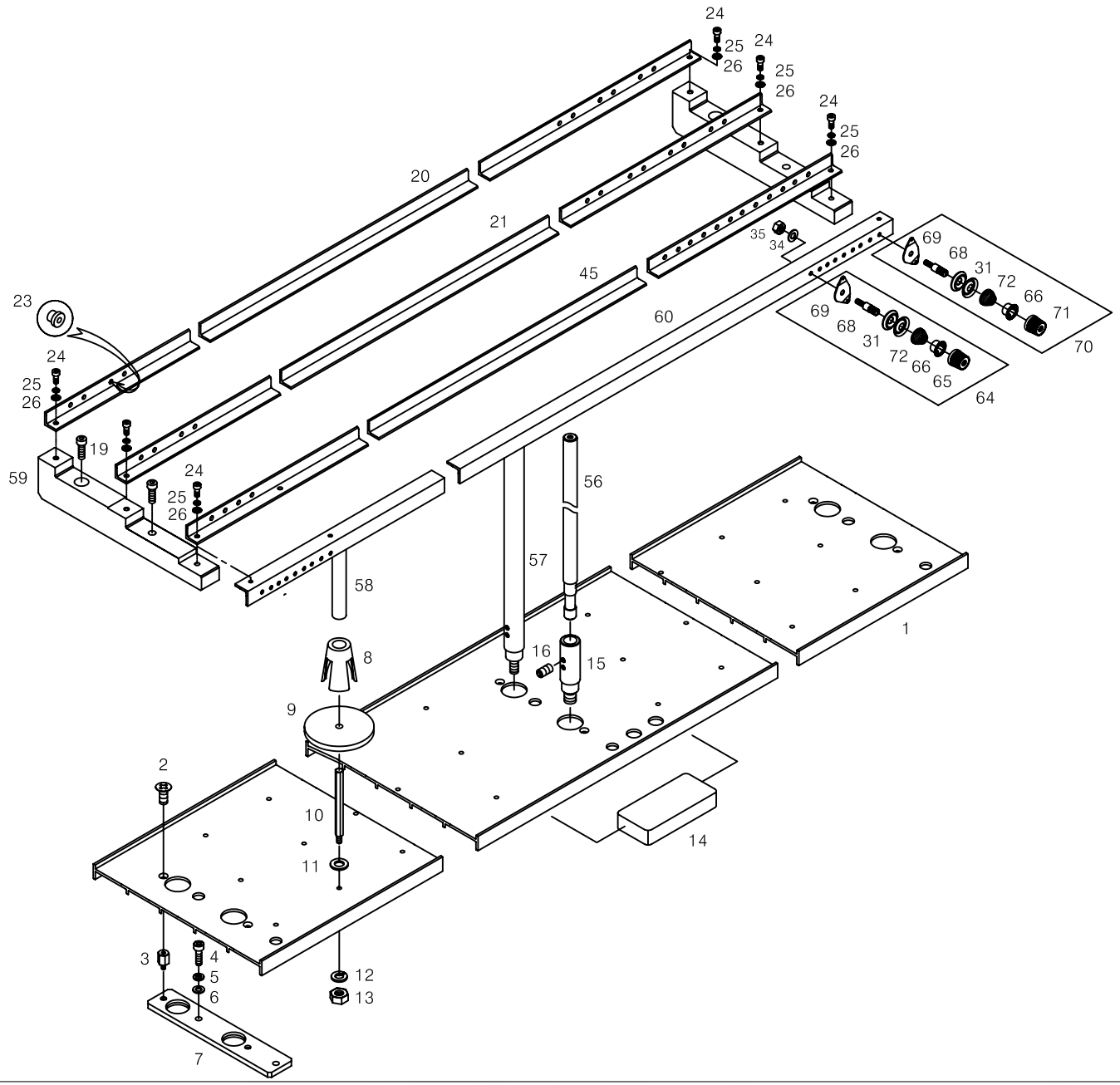

Ref. No	Part No.	Part Names		Q'ty
C-001	11000102UK00	Spool Plate	(6C)	1
	11001AD-UK01	Spool Plate	(12C)	
	11001AD-UK14	Spool Plate	(15C)	
C-002	02002SC-7119	Pluss Screw (M4*L8)		8
C-003	11005CW-UK01	Spool Plate Fixing Bolt M6*L21		8
C-004	03016SC-4113	Hex. Socket Bolt (M5*L15)		8
C-005	18048SW-3115	Spring Washer (@5)		8
C-006	18049SW-3111	Washer (@5)		8
C-007	11006PR-UK01	Spool Plate Base		4
C-008	12012PM-A001	Spool Holder		48
C-009	12052SF-A001	Spool Sponge		48
C-010	12009SC-A001	Spool Post		48
C-011	18049SW-3111	Washer (@5)		48
C-012	18048SW-3115	Spring Washer (@5)		48
C-013	12010SN-1211	Hex.Nut (M5)		48
C-014	12033RB-UK01	Cushion Rubber		1
C-015	12014SC-A001	Spool Stand Bolt		5
C-016	04014SC-4517	Hex.Socket Set Screw(M5*L5)		10
C-019	03016SC-4113	Hex. Socket Bolt (M5*L15)		5
C-020	05200304UK24	Angle "A"	(6C)	1
	11022AD-UK01	Angle "A"	(12C)	
	11022AD-UK14	Angle "A"	(15C)	
C-021	05200404UK24	Angle "B"	(6C)	1
	11023AD-UK01	Angle "B"	(12C)	
	11023AD-UK14	Angle "B"	(15C)	
C-023	12042PM-A001	Eyelet		96
C-024	02015SC-7113	Hex.Socket Bolt(M4*L10)		15
C-025	02028SW-9115	Spring Washer (@4)		15
C-026	06003SW-2111	Washer (@4)		15
C-031	11153PR-B001	Tension Disc @22		96
C-034	18048SW-3115	Spring Washer (@5)		48
C-035	03031SN-A001	Pin. Nut (11/64,N=40)		48
C-045	05200104UK24	Angle "C"	(6C)	1
	05200104UK40	Angle "C"	(12C)	
	05200105UK40	Angle "C"	(15C)	
C-056	12015SF-A001	Spool Stand (L=330)	(6,12C)	5
	01001500T000	Spool Stand (L=380)	(15C)	
C-057	01001504U000	Spool Stand L=345	(6,12C)	4
	01001505U000	Spool Stand L=395	(15C)	
C-058	10000100A000	Thread Guide L=200		8

Ref. No	Part No.	Part Names		Q'ty
C-059	10600100H000	Thread Angle Frame		5
C-060	05200214UK24	Angle "D"	(6C)	1
	05200214UK40	Angle "D"	(12C)	
	05200215UK40	Angle "D"	(15C)	
C-064	10600110B000	SUB TENSION ADJUSTING SET		44
C-065	08300600A000	SUB TENSION ADJUSTING NUT (A)		44
C-066	11088PM-A001	TENSION SPRING STOPPER		48
C-068	08301000A000	TENSION ADJUSTING STUD		48
C-069	11162PR-A001	TENSION PLATE		48
C-070	10600210B000	SUB TENSION ADJUSTING SET	(black)	4
C-071	10600610A000	SUB TENSION ADJUSTING NUT (B)	(black)	4
C-072	08301100A000	TENSION SPRING		48

D

Main Drive System

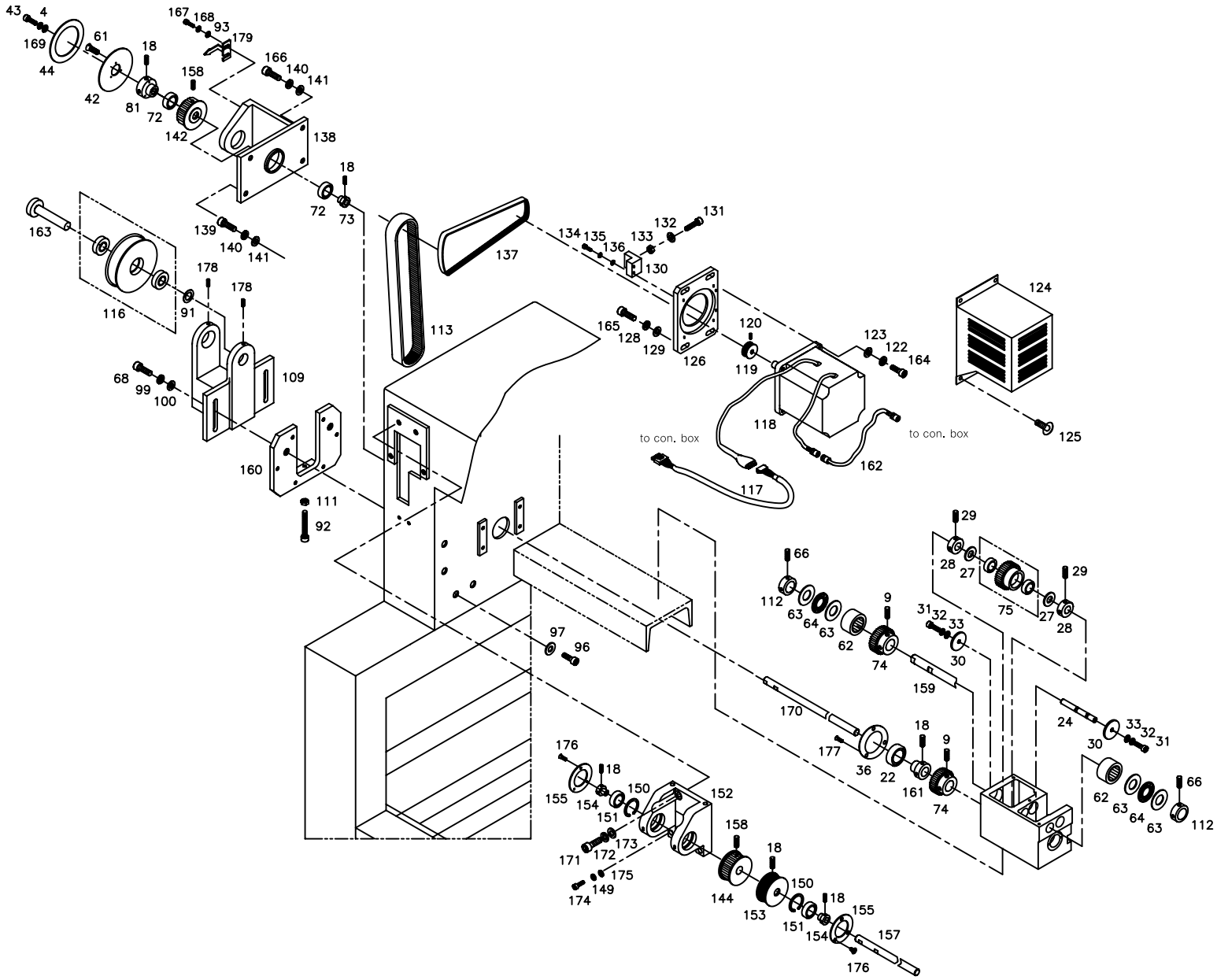

Ref. No	Part No.	Part Names	Q'ty
D-004	15095SW-3115	Spring Washer (@8)	1
D-009	04012AF-A001	Hook Shaft Bush Screw	11
D-018	14060AF-4517	Hex.Socket Screw(M6*L6)	12
D-022	04026BR-A001	Ball Bearing 6003Z	1
D-024	13041SH-UK01	Middle Shaft	1
D-027	12019BR-T121	Fiber Washer R-Tw1020	2
D-028	13038CW-UK01	Collar "C"	2
D-029	03022SC-4517	Hex. Socket Set Screw(M4*L5)	4
D-030	08053PR-A001	Lever Washer	2
D-031	02023SC-7113	Hex. Socket Bolt (M4*L8)	2
D-032	02028SW-9115	Spring Washer (@4)	2
D-033	05009SW-1111	Washer (@4-L)	2
D-036	04039PR-A001	Bearing Cover	1
D-042	13053PR-UK01	Angle Plate Base	1
D-043	14006SC-7113	Hex.Socket Set Screw(M8*L15)	1
D-044	13054ET-UK01	Angle Disk	1
D-062	04027BR-A001	Needle Bearing (Hmk1515)	2
D-063	08028BR-A001	Thrust Washer (As 1528)	4
D-064	08027BR-A001	Thrust Bearing (Ntb 1528)	2
D-066	04016AF-A001	Cam Collar Screw	4
D-068	14027SC-4113	Hex.Socket Bolt (M8*L30)	2
D-072	01029BR-A001	Ball Bearing (6004Zz)	2
D-073	14058CW-A001	Collar "A"	1
D-074	13032GA-UK06	Index Shaft Gear Uk06	2
D-075	13036BR-UK01	Needle Bearing (63800Zz)	2
D-081	13107CW-UK01	Collar	1
D-082	14017PR-E131	Bearing Cover	2
D-090	13109CL-UK01	Tension Adjusting Block	1
D-091	13106PR-UK01	Idler Spacer	1
D-092	14063SC-A001	Tension Control Bolt (M6*L40)	2
D-093	18015SW-3111	Washer (4@)	1
D-096	16059SC-7113	Hex.Socket Bolt (M6*L12)	2
D-097	08057SW-1111	Washer (@6)	8
D-099	15095SW-3115	Spring Washer (@8)	2
D-100	08041SW-1111	Washer (@8-S)	2
D-109	13118CS-UK01	Idler Support Bracket	1
D-111	13042SN-1111	Hex.Nut (M6*T5-R)	2
D-112	03704900A000	Cam Shaft Collar	2
D-113	03000200U000	Timing Belt (25-S5M*L1025)	1
D-116	03000300U000	Idler	1
	13026BR-T121	Needle Bearing (6002Z)	2

Ref. No	Part No.	Part Names	Q'ty
D-117	02106500U040	Sh-65-2	1
D-118	03000400U000	Main Motor (Xp50B07050Dxe92)	1
D-119	03010800UH80	MAIN MOTOR PULLEY	1
D-120	04014SC-4517	Hex.Socket Set Screw(M5*L5)	2
D-122	18048SW-3115	Spring Washer (5@)	4
D-123	18049SW-3111	Washer (@5)	4
D-124	03006300U000	Main Motor Cover	1
D-125	02044SC-3123	Truss Screw (M5*L8)	4
D-126	03006400U000	Motor Fixing	1
D-128	16014SW-4115	Spring Washer (@6)	4
D-129	08057SW-1111	Washer (@6)	4
D-130	03000900U000	Tension Adjusting Block	1
D-131	14063SC-A001	Tension Control Bolt (M6*L40)	1
D-132	08057SW-1111	Washer (@6)	1
D-133	08058SN-1311	Hex. Nut (M6-No3)	1
D-134	08062SC-7113	Hex. Socket Bolt (M5*L20)	2
D-135	18048SW-3115	Spring Washer (5@)	2
D-136	18049SW-3111	Washer (@5)	2
D-137	03100700H000	MAIN DRIVING BELT 290J*10R	1
D-138	03012100U000	Low Shaft Support Bracket	1
D-139	08091SC-7113	Hex. Socket Bolt (M6*L20)	2
D-140	16014SW-4115	Spring Washer (@6)	4
D-141	08057SW-1111	Washer (@6)	4
D-142	03000130U000	Pulley (Tubular)	1
D-144	03000120U000	Pulley (Tubular)	1
D-149	03026SW-9115	Spring Washer (@6)	2
D-150	03010SR-4013	C-Ring (@47)	2
D-151	01001100H000	Ball Bearing (6005Zz)	2
D-152	03101300UH80	UPPER SHAFT SUPPORT BRACKET	1
D-153	03010800UH00	TOP SHAFT PULLEY	1
D-154	03005210H000	Collar "A"	2
D-155	03101400U000	Upper Shaft Support Cover	2
D-157	03000100UK40	Top Shaft (L2298)	1
D-158	14061AF-4517	Hex.Socket Screw(M8*L8)	8
D-159	03000200UK40	Low Shaft	1
D-160	13123CW-E121	Idelr Plate	1
D-161	01102000B000	Bearing Bushing	1
D-162	02106400U040	Cable (Sh-64-2)	1
D-163	13120CW-UK01	IDLER SHAFT	1
D-164	08062SC-7113	HEX. SOCKET BOLT (M5*L20)	4
D-165	08091SC-7113	HEX. SOCKET BOLT (M6*L20)	4

D

Main Drive System

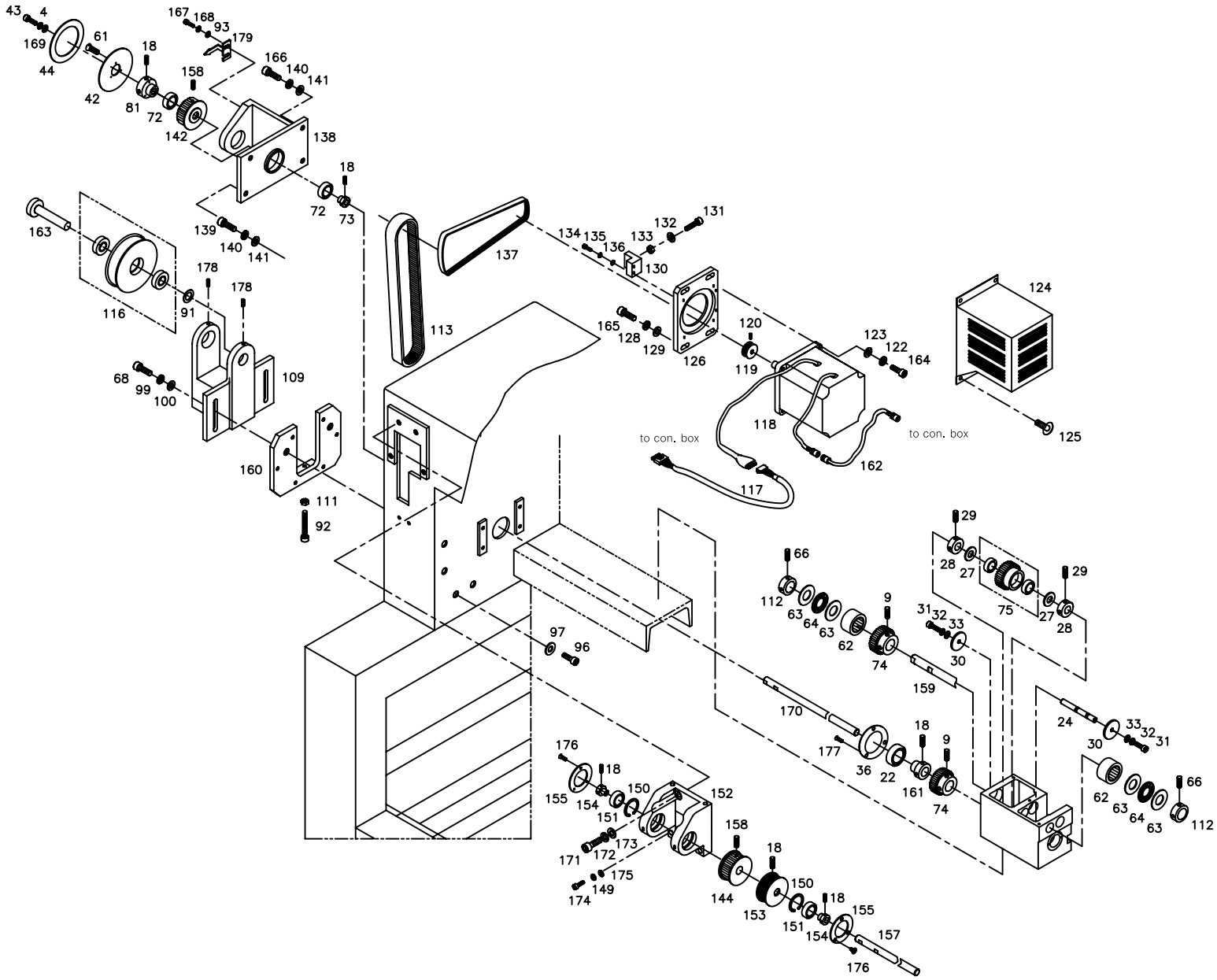

Ref. No	Part No.	Part Names	Q'ty
D-166	06025MC-7113	HEX.SOCKET BOLT(M6*L25)	2
D-167	02015SC-7113	HEX.SOCKET BOLT(M4*L10)	2
D-168	02028SW-9115	SPRING WASHER (@4)	2
D-169	04029SW-A001	STUD BOLT WASHER(S) (@8)	1
D-170	03100600UK40	INDEX SHAFT	1
D-171	08087SC-7113	HEX. SOCKET BOLT (M8*L25)	2
D-172	15095SW-3115	SPRING WASHER (@8)	2
D-173	08041SW-1111	WASHER (@8-S)	2
D-174	14046SC-7113	HEX.SOCKET BOLT (M6*L30)	2
D-175	08057SW-1111	WASHER (@6)	2
D-176	22006SC-7113	HEX. SOCKET BOLT (M3*L8)	6
D-177	21002SC-8119	PLUS SCREW (M3*L8)	3
D-178	14060AF-4517	HEX.SOCKET SCREW(M6*L6)	2
D-179	03012210U000	INDICATOR	1

Ref. No	Part No.	Part Names	Q'ty

E

Bed I

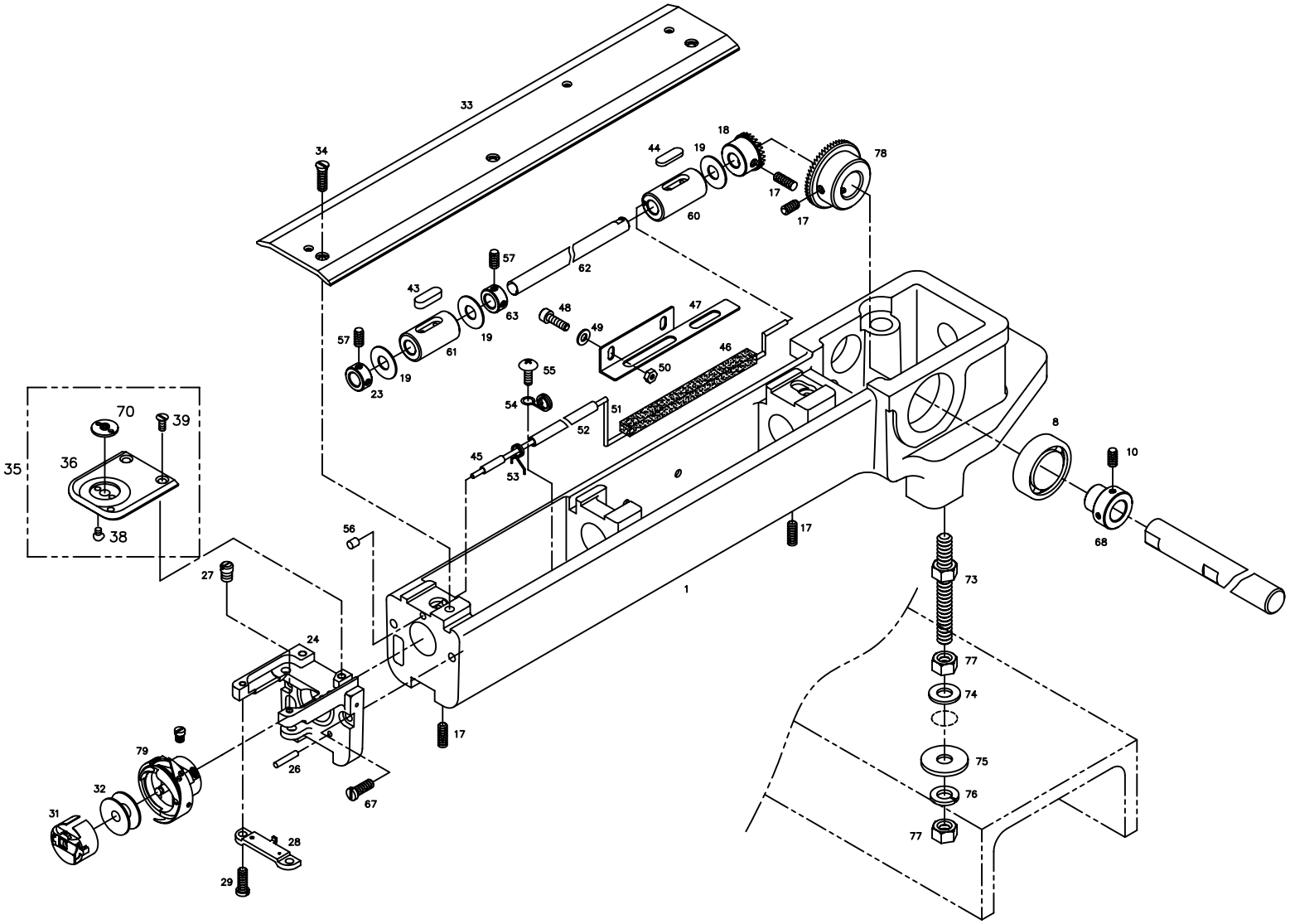
33
34
44
19
18
78
17
17
60
57
62
43
63
48
47
49
57
61
19
46
50
19
23
55
54
51
52
70
39
35
36
45
53
8
10
38
56
17
68
27
1
73
24
77
74
17
79
26
75
32
67
76
31
28
77
29

Ref. No	Part No.	Part Names	Q'ty
E-001	04001CS-UK01	Bed "A"	2
E-008	04026BR-A001	Ball Bearing 6003Z	4
E-010	04016AF-A001	Cam Collar Screw	8
E-017	04012AF-A001	Hook Shaft Bush Screw	24
E-018	04019GA-UK01	Hook Shaft Gear	4
E-019	02004BR-T121	Hook Shaft Bearing Washer	12
E-024	02007CL-T121	Needle Plate Bracket	4
E-025	02008SC-4122	NEEDLE PLATE BRACKET SCREW	8
E-026	02009PI-T121	Spring Pin	8
E-027	04026SC-T121	Needle Plate Pin	4
E-028	02010CL-T121	Rotary Hook Support	4
E-029	02011SC-3125	Rotary Hook Support Screw	8
E-031	04034AF-A001	Bobbin Case Set	4
E-032	04035AF-A001	Bobbin	4
E-033	04036PR-UK01	Bed Cover	4
E-034	02030SC-T121	Bed Cover Screw(9/64" 40)	12
E-035	02019BM-T121	Needle Plate Set(Cap)	4
E-036	02019PR-T121	Needle Plate(Cap)	4
E-038	04007SC-A001	Cushion Cover Screw (M3*L2.3)	8
E-039	04004AF-A001	Needle Plate Screw	8
E-043	32043SF-T121	Front Bushing Felt	4
E-044	18039SF-UK01	Felt	4
E-045	32045CW-T121	Oil Hose Pin	4
E-046	18041SF-UK01	Bed Felt	4
E-047	32040PR-T121	Bed Felt Cover	4
E-048	02023SC-7113	Hex. Socket Bolt (M4*L8)	8
E-049	02063SW-1111	Washer(@4)	8
E-050	05016SN-1211	Hex.Nut (M4)	8
E-051	-	Wick	4
E-052	-	Oil Tube	4
E-053	32046SP-T121	Holder For Oil Hose	4
E-054	32021SP-T121	Needle Bar Hose Holder "B"	4
E-055	28021SC-3123	Truss Screw (M3*L4)	4
E-056	32047RB-T121	Oil Rubber Cap	4
E-057	08113SC-A001	Collar Screw	16
E-060	01102200U000	Hook Shaft Rear Bushing	4
E-061	02000300T000	Hook Shaft Front Bushing	4
E-062	02100300U000	Hook Shaft	4
E-063	03707300A000	Solenoid Collar	8
E-067	04037SC-A001	Picker Bracket Screw(R)	8

Ref. No	Part No.	Part Names	Q'ty
E-068	01102000B000	Bearing Bushing	4
E-070	02022CW-T121	NEEDLE GUIDE PLATE(FLAT)	4
E-073	04028SC-UK01	STUD BOLT (M10*P1.25*L69)	12
E-074	04013PR-B001	WASHER (3.2T,@10)	4
E-075	04014PR-B001	WASHER (2T,@10)	4
E-076	01008SW-9115	SPRING WASHER(@10)	4
E-077	04032SN-UK01	HEX. NUT (M10*P1.25)	8
E-078	01101700U000	LOW SHAFT GEAR	4
E-079	04033AF-D002	Rotary Hook Set	4

F

Bed II

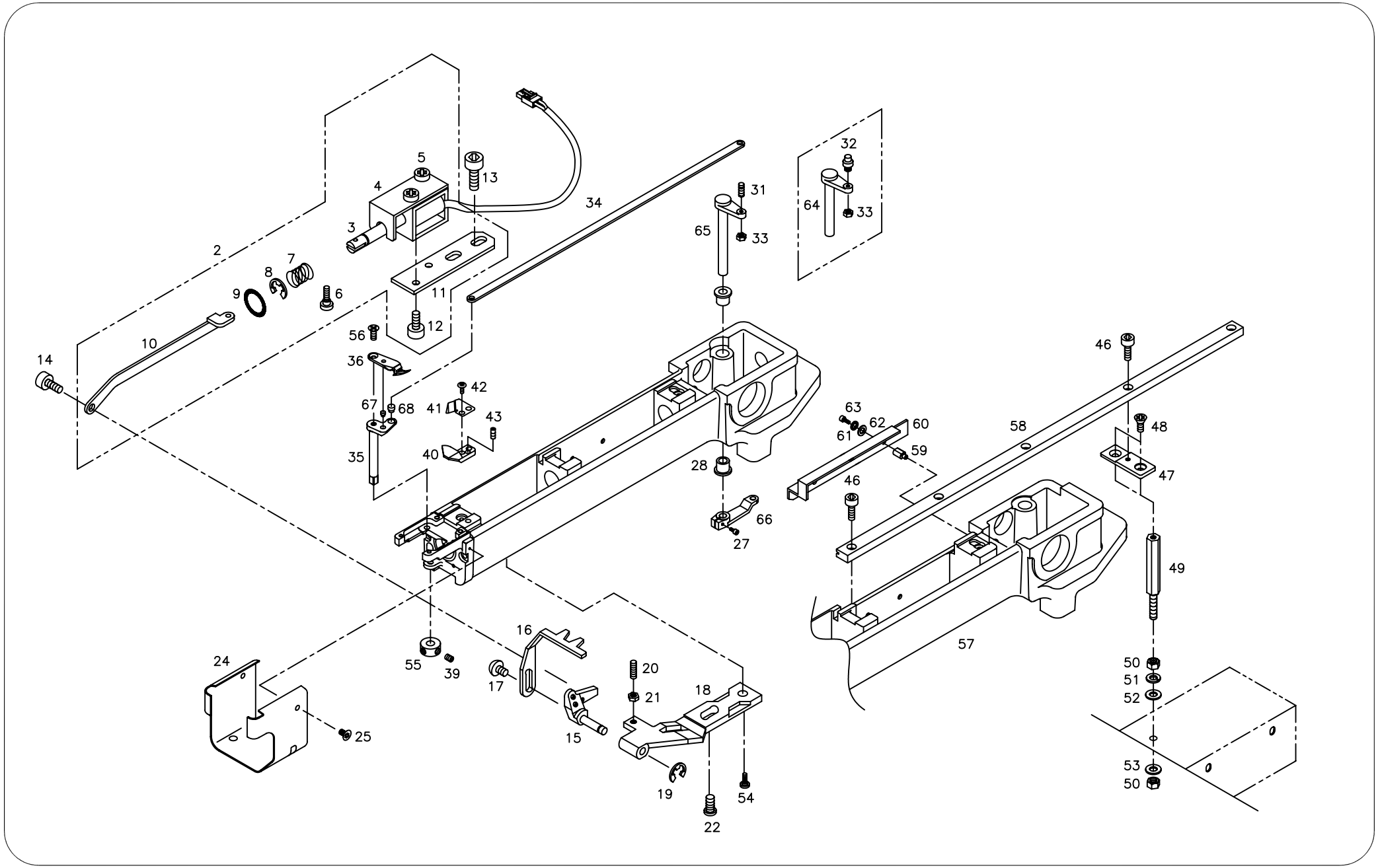
2
3
4
5
6
7
8
9
10
11
12
13
14
16
17
18
19
20
21
22
24
25
27
28
31
32
33
34
35
36
39
40
41
42
43
46
47
48
49
50
51
52
53
54
55
56
57
58
59
60
61
62
63
64
65
66
67
68

Ref. No	Part No.	Part Names	Q'ty
F-002	10009EL-A004	Picker Sol. Set	4
F-003	10009EL-T121	Picker Sol.	4
F-004	01-012A-AT10	Picker Sol. Cover	4
F-005	28021SC-3123	Truss Screw (M3*L4)	8
F-006	10021SC-A001	Sol. Stud Screw	4
F-007	10011SP-A001	Sol. Spring	4
F-008	13044SR-4013	E-Ring (@4)	4
F-009	10012RB-A001	Cushion Washer	4
F-010	01-011A-AT10	Connecting Plate	4
F-011	01-013A-AT10	Picker Sol. Base	4
F-012	06010AF-8118	Plus Screw(M3*L4)	8
F-013	02015SC-7113	Hex.Socket Bolt(M4*L10)	8
F-014	08012CW-T121	Connecting Plate Stud Screw	4
F-015	08018CL-T121	Picker Base	4
F-016	08021PR-T121	Picker	4
F-017	07018SC-8118	Plus Screw (M3*L8)	8
F-018	08013CL-T121	Picker Bracket	4
F-019	15159SR-4013	E-Ring (3@)	4
F-020	10015SC-4215	Plus Screw (M3*L10)	4
F-021	08112SN-A001	Hex. Nut (M3)	4
F-022	08016SC-T121	Plus Screw(15/64*N28)	4
F-024	04038PR-T121	Hook Cover	4
F-025	08014AF-A001	Plus Screw (M3*L8)	8
F-027	02015SC-7113	Hex.Socket Bolt(M4*L10)	4
F-028	07021MP-T121	Lever Shaft Bush	8
F-031	07023CW-T121	Lever Pin "A"	3
F-032	08122CW-UK01	Lever Pin "B"	1
F-033	02029SN-9311	Hex. Nut (M4-No2)	4
F-034	07006LA-UK01	Mes Connecting Link	4
F-035	07026FU-T121	Moving Mes Shaft	4
F-036	07028PR-T121	Moving Mes	4
F-039	03022SC-4517	Hex. Socket Set Screw(M4*L5)	8
F-040	07032CL-T121	Fixed Mes	4
F-041	07033PR-T121	Under Thread Presser	4
F-042	07018SC-8118	Plus Screw (M3*L8)	8
F-043	03050SC-4517	Hex. Socket Set Screw (M3*L3)	4
F-046	02023SC-7113	Hex. Socket Bolt (M4*L8)	2
F-047	04053PR-UK01	Rail Support Plate	2
F-048	16022AF-8119	Plus Screw(M6*L20)	4
F-049	16021CW-A001	Table Support Stud	4

Ref. No	Part No.	Part Names	Q'ty
F-050	04032SN-A001	Hex. Nut (M8-No2)	4
F-051	15095SW-3115	Spring Washer (@8)	4
F-052	04029SW-A001	Stud Bolt Washer(S) (@8)	4
F-053	04030SW-A001	Stud Bolt Washer(L) (@8)	4
F-054	116410S-8118	Driver Screw 11/64-40,L10	4
F-055	13003000T000	Mes Shaft Collar	4
F-056	08014SC-A001	Plus Screw (M3*L8)	4
F-057	01200100UH00	Bed	1
F-058	03200100UH00	Rail Guide	1
F-059	03200200UH00	Rail Guide Cover Stud	2
F-060	03200300UH00	Rail Guide Cover	1
F-061	18014SW-3115	Spring Washer (@4-No2)	2
F-062	18015SW-3111	Washer (4@)	2
F-063	02023SC-7113	Hex. Socket Bolt (M4*L8)	4
F-064	03001200U000	Mes Driving Lever Shaft "B"	1
F-065	03001100U000	Mes Driving Lever Shaft "A"	3
F-066	02100400U000	Mes Driving Lever	4
F-067	08122CW-A001	MES PIN	4
F-068	08123CW-T121	MOVING MES CONNECTING LINK PIN	4

Thread Cutting System

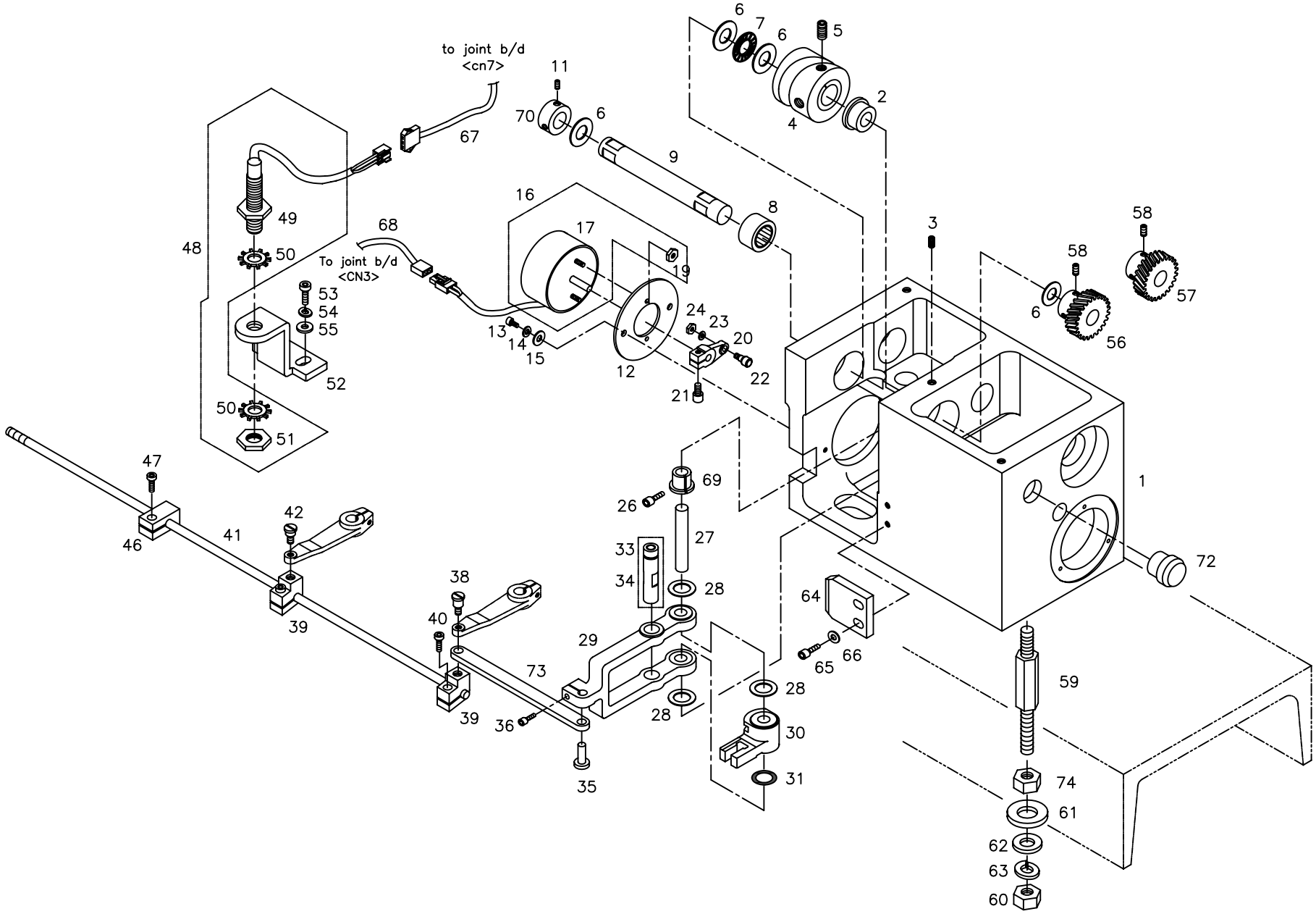

Ref. No	Part No.	Part Names	Q'ty
G-001	08023CS-UK01	Mes Cam Driving Box	1
G-002	08042MP-UK01	Mes Cam Shaft Bush	1
G-003	03022SC-4517	Hex. Socket Set Screw(M4*L5)	1
G-004	07034CM-UK01	Mes Cam	1
G-005	14005SC-4517	HEX.SOCKET SET SCREW (M8*L8	2
G-006	08028BR-A001	Thrust Washer (As 1528)	4
G-007	08027BR-A001	Thrust Bearing (Ntb 1528)	1
G-008	04027BR-A001	Needle Bearing (Hmk1515)	1
G-009	07038CW-UK01	Mes Cam Shaft	1
G-011	04016AF-A001	Cam Collar Screw	2
G-012	07015PR-UK01	Solenoid Plate	1
G-013	02031SC-7113	Hex. Socket Screw(M5*L10)	2
G-014	18048SW-3115	Spring Washer (5@)	2
G-015	18049SW-3111	Washer (@5)	2
G-016	08068EL-UK01	Thread Trimming Solenoid Ass'	1
G-017	-	Solenoid	1
G-019	11014SN-1211	Hex.Nut (M3-No2)	2
G-020	07017CL-UK01	Solenoid Crank	1
G-021	03071SC-7113	Hex. Socket Bolt (M3*L10)	1
G-022	08048AF-T121	Solenoid Crank Roller	1
G-023	18014SW-3115	Spring Washer (@4-No2)	1
G-024	08050SN-T121	Hex. Nut	1
G-026	02014SC-7113	Hex. Socket Bolt (M4*L5)	1
G-027	07025CW-UK01	Lever Shaft (@8*L70)	1
G-028	07024BR-UK01	Fiber Washer(R-Tw0805)	3
G-029	07028CL-UK01	Mes Driving Lever	1
G-030	07029CL-UK01	Mes Driving Crank	1
G-031	08022RB-T121	O-Ring (@10)	1
G-033	07030AF-UK01	Roller	1
G-034	07026CW-UK01	Roller Shaft	1
G-035	08034CW-UK01	Lever Connecting Pin	1
G-036	04010MC-7113	Hex.Socket Bolt (M4*L10)	1
G-038	08016CW-UK01	Link Stud Bolt	1
G-039	08023CL-UK01	Mes Shaft Cramp	4
G-040	02015SC-7113	Hex.Socket Bolt(M4*L10)	4
G-041	23004SH-UK01	Mes Driving Shaft	1
G-042	08019CW-UK01	Clamp Stud Bolt	3
G-046	08023CW-A001	Mes Shaft Cramp	1
G-047	02015SC-7113	Hex.Socket Bolt(M4*L10)	1
G-048	08102EL-A001	Zero Point Sensor Ass'Y	1

Ref. No	Part No.	Part Names	Q'ty
G-049	-	Mes Retracting Sensor	1
G-050	-	Tooth Locked Washer	2
G-051	-	Hex. Nut	2
G-052	08070PR-UK01	Sensor Bracket	1
G-053	02031SC-7113	Hex. Socket Screw(M5*L10)	2
G-054	18048SW-3115	Spring Washer (5@)	2
G-055	18049SW-3111	Washer (@5)	2
G-056	07041GA-UK01	Gear "A"	1
G-057	07043GA-UK01	Gear "B"	1
G-058	04012AF-A001	Hook Shaft Bush Screw	4
G-059	08025CW-UK01	Box Stud Bolt	3
G-061	04030SW-A001	Stud Bolt Washer(L) (@8)	3
G-062	04029SW-A001	Stud Bolt Washer(S) (@8)	3
G-063	15095SW-3115	Spring Washer (@8)	3
G-064	08021PM-UK01	Lever Stopper	1
G-065	02015SC-7113	Hex.Socket Bolt(M4*L10)	2
G-066	18015SW-3111	Washer (4@)	2
G-067	25043EL-UK01	Sensor To Joint Con.(4Ht-43)	1
G-068	25027EL-UK01	Sol. Connecting Cable (4Ht-27)	1
G-069	08203000A000	Take-Up Lever Shaft Bush(L)	1
G-070	03704900A000	Cam Shaft Collar	1
G-072	08071RB-UK01	Thread Driver Box Ruber	1
G-073	03000700TH00	Thread Lever Connect Link	1
G-074	04032SN-A001	Hex. Nut (M8-No2)	6

H

Arm I

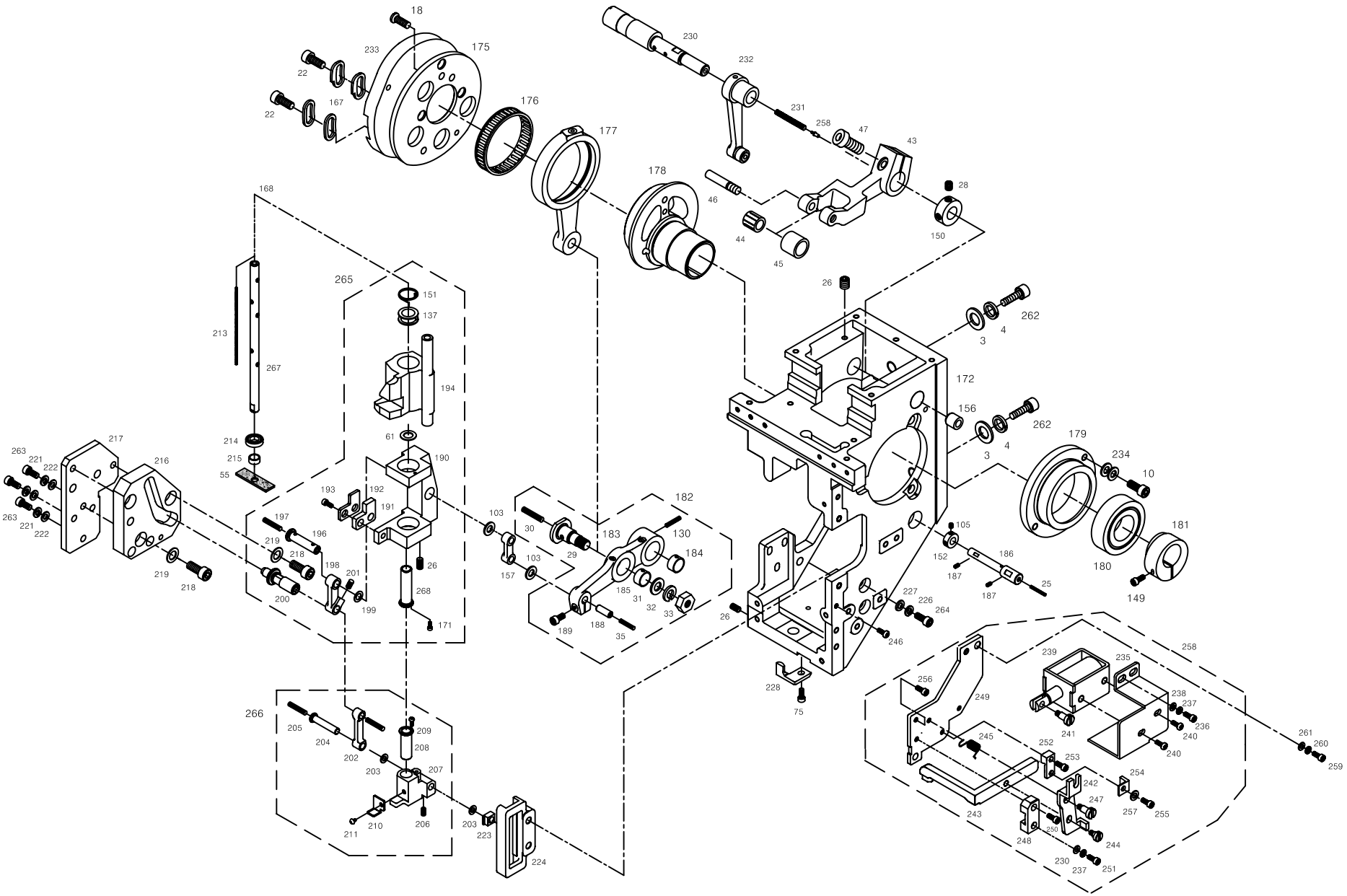
18
175
233
22
167
176
177
178
230
232
231
258
47
43
28
150
46
44
45
168
265
151
137
213
267
194
61
190
214
215
55
217
216
263
221
222
193
192
191
197
196
219
218
198
201
200
199
268
171
103
30
29
183
130
184
182
157
185
31
32
33
189
188
35
26
172
156
262
3
4
179
234
10
181
180
149
105
152
186
187
25
227
226
264
246
228
75
266
205
204
202
203
209
208
207
210
211
206
223
224
239
235
258
256
249
238
237
236
240
241
245
252
253
254
242
247
257
255
243
250
248
244
230
251
261
260
259

Ref. No	Part No.	Part Names	Q'ty
H-003	04029SW-A001	Stud Bolt Washer(S) (@8)	12
H-004	15095SW-3115	Spring Washer (@8)	12
H-010	02031SC-7113	Hex. Socket Screw(M5*L10)	12
H-018	03007SC-A001	Cam Base Screw	12
H-022	02023SC-7113	Hex. Socket Bolt (M4*L8)	8
H-025	-	Wick	4
H-026	03020SC-A001	Drive Pin Screw 11/64,N40,L8	20
H-028	03022SC-4517	Hex. Socket Set Screw(M4*L5)	32
H-029	03023SC-A001	Connecting Rod Stud	4
H-030	-	Wick	4
H-031	03025SW-1211	Washer (@6)	4
H-032	03026SW-9115	Spring Washer (@6)	4
H-033	03027SN-A001	Stud Nut	4
H-035	-	Wick	4
H-043	07018CA-UK01	Take-Up Driving Lever "B"	4
H-044	04021BR-T121	Neddle Bearing Kt367N (Iko)	4
H-045	04020AF-T121	Roller For Take-Up Gear-B	4
H-046	04019CW-T121	Pin Stud Screw	4
H-047	02015SC-7113	Hex.Socket Bolt(M4*L10)	4
H-055	03053SF-A001	Felt "B"	4
H-061	03048SW-A001	Reciprocator Washer	4
H-075	03057SC-A001	Head Rail Holder Screw	12
H-103	03034SW-A001	Reciprocator Washer	12
H-105	04012AF-A001	Hook Shaft Bush Screw	8
H-130	-	Needle Bar Drive Lever Wick	4
H-137	03046CW-B001	Jump Spring Guide	4
H-149	05015MC-4113	Hex. Socket Bolt (M5*L15)	4
H-150	03302100A000	Pin Collar	4
H-151	03045SP-B001	Jump Spring	4
H-152	01101300A000	Hook Shaft Collar	4
H-156	03301200A000	Bushing	4
H-157	03003200A000	Needle Bar Drive Rink	4
H-167	03300100A000	Cam Washer A	8
H-168	03300200A000	Cam Washer B	8
H-171	03006MC-3123	Truss Screw (M3*L6)	4
H-172	03300100U000	Arm	4
H-175	03300210H000	Take-Up Lever Cam Base	4
H-176	03302900H000	Needle Case (Kt-42469)	4
H-177	03303000H000	Connecting Rod	4
H-178	03300310H000	Needle Bar Driving Cam @20	4

Ref. No	Part No.	Part Names	Q'ty
H-179	03303100H000	Bearing Case A @20	4
H-180	01001100H000	Ball Bearing (6005Zz)	4
H-181	03000110H000	Cam Tightening Collar (@20)	4
H-182	03313200H000	Needle Bar Drive Lever	4
H-183	03000200A000	NEEDLE BAR DRIVE LEVER	4
H-184	03307200A000	Needle Driving Lever Bushing	4
H-185	03307300A000	Needle Driving Lever Bushing	4
H-186	03301800U000	Needle Bar Drive Pin	4
H-187	03020SC-A001	Drive Pin Screw 11/64,N40,L8	8
H-188	03303300H000	Lever Pin	4
H-189	02015SC-7113	Hex.Socket Bolt(M4*L10)	4
H-190	03600110H000	Needle Driving Shaft Driver	4
H-191	03600300H000	Reciprocator Stopper	4
H-192	03600600H000	Stopper Bracket	4
H-193	03046SC-8118	Plus Screw (M3*L5)	8
H-194	03600210H000	Needle Bar Reciprocator	4
H-196	03600500H000	Driver Pin	4
H-197	-	Wick	4
H-198	03007600H000	Foot Drving Connect Link A	4
H-199	03034SW-A001	Reciprocator Washer	4
H-200	03302800H000	Presser Foot Hinge Pin Ass'Y	4
H-201	08113SC-A001	Collar Screw	4
H-202	03007700H000	Foot Drving Connect Link B	4
H-203	03034SW-A001	Reciprocator Washer	8
H-204	03007800H000	Presser Foot Reciprocator Pin	4
H-205	-	Wick	4
H-206	08113SC-A001	Collar Screw	8
H-207	03001510H000	Presser Foot Reciprocator	4
H-208	03001610H000	Presser Foot Bush @20	4
H-209	09005SC-3123	Truss Screw (M3*L6)	4
H-210	03001710H000	Presser Foot Stopper	4
H-211	08006SC-8118	Plus Screw (M3*L5)	4
H-213	-	Wick	4
H-214	03008000H000	Ball Bearing 6800	4
H-215	03008100H000	Bearing Bushing For Shaft	4
H-216	03300810H000	Presser Foot Driver Cam	4
H-217	03303400H000	Presser Foot Drving Cam Base	4
H-218	02023SC-7113	Hex. Socket Bolt (M4*L8)	18
H-219	06003SW-2111	Washer (@4)	12
H-221	18014SW-3115	Spring Washer (@4-No2)	12

H

Arm I

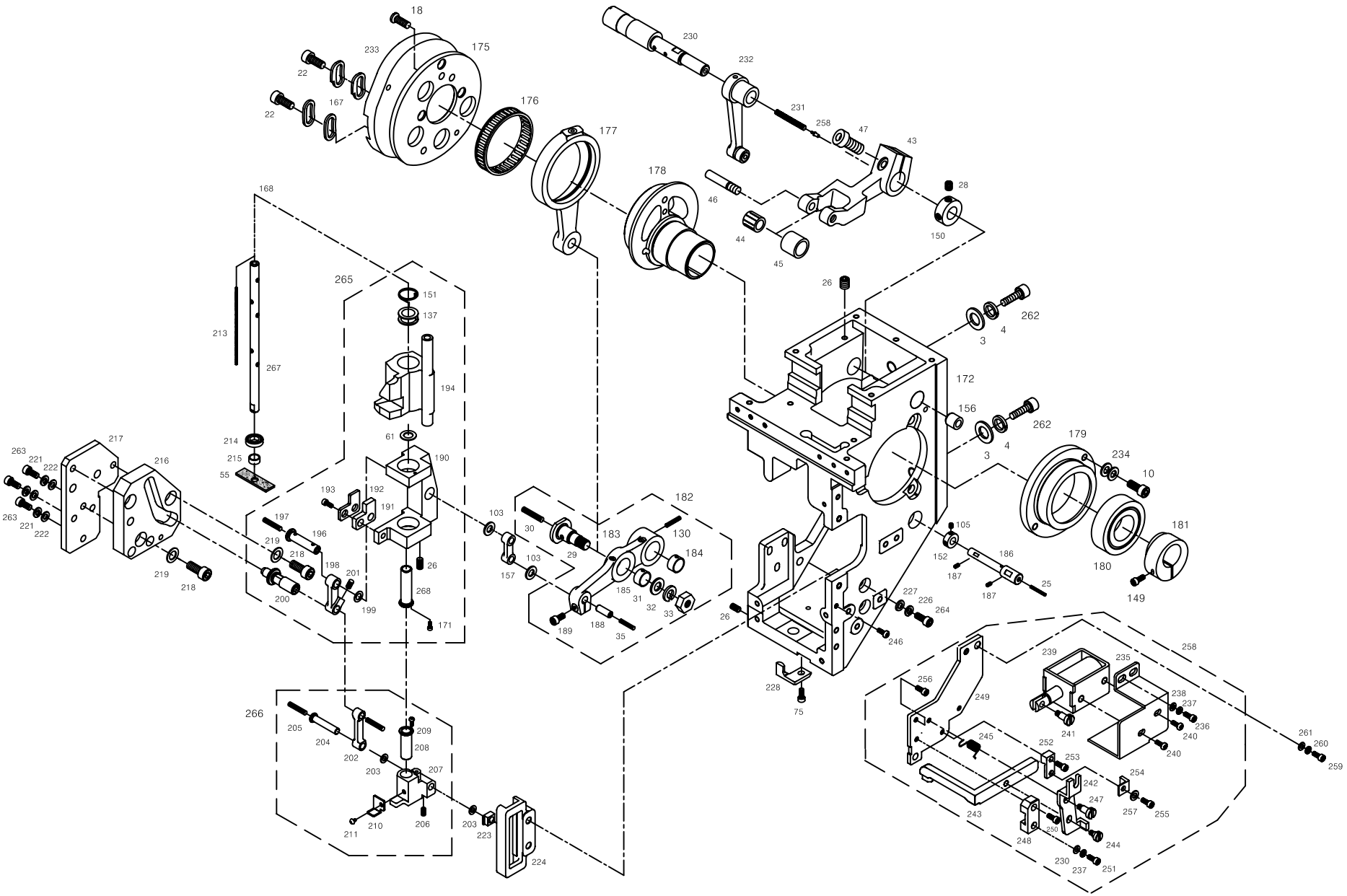
18
175
233
22
167
176
177
178
230
232
231
258
47
43
28
150
46
44
45
168
265
151
137
213
267
194
61
190
214
215
55
217
216
263
221
222
193
192
191
197
196
219
218
198
201
200
199
268
171
103
30
29
183
130
184
182
157
185
31
32
33
189
188
35
26
172
156
262
3
4
179
234
10
181
180
149
105
152
186
187
25
227
226
264
246
228
75
266
205
204
202
203
209
208
207
210
211
206
223
224
239
235
258
256
249
238
237
236
240
241
245
252
253
254
242
247
257
255
243
250
248
244
230
251
261
260
259

Ref.No	Part No.	PartNames	Q'ty
H-222	18015SW-3111	Washer (4@)	12
H-223	03303500H000	Presser Foot Guide Block	4
H-224	03303600H000	Reciprocator Guide	4
H-226	18014SW-3115	Spring Washer (@4-No2)	8
H-227	18015SW-3111	Washer (4@)	8
H-228	03056CL-B001	Head Rail Holder	4
H-230	03301000B000	Take-Up Lever Drive Pin	4
H-231	-	Wick	4
H-232	03314100A000	Take-Up Lever A	4
H-233	03300720H000	Take-Up Lever Driver Cam (Hb)	4
H-234	02030SW-B001	Braring Case Washer	24
H-235	03303900H000	Solenoid Bracket	4
H-236	04010MC-7113	Hex.Socket Bolt (M4*L10)	8
H-237	18014SW-3115	Spring Washer (@4-No2)	20
H-238	18015SW-3111	Washer (4@)	20
H-239	03304000H000	Upper Thread Holder Solenoid	4
H-240	05007SC-7113	Hex. Socket Bolt (M3*L5)	8
H-241	03304100H000	Upper Thread Holder Stud Screw	4
H-242	03304200H000	Holder Connecting Link	4
H-243	03304300H000	Upper Thread Holder Push Bar	4
H-244	03304400H000	Holder Stud Screw "A"	4
H-245	03304500H000	Upper Holder Return Spring	4
H-246	18033SC-3123	Truss Screw (M5*L6)	4
H-247	03304600H000	Holder Stud Screw "B"	4
H-248	03304800H000	Push Bar Base	4
H-249	03304700H000	Push Bar Base	4
H-250	04010MC-7113	Hex.Socket Bolt (M4*L10)	4
H-251	11029SC-4113	Hex. Socket Bolt (M4*L20)	4
H-252	03305000H000	Push Bar Base	4
H-253	04010MC-7113	Hex.Socket Bolt (M4*L10)	4
H-254	03304910H000	Upper Thread Holder Stopper	4
H-255	11029SC-4113	Hex. Socket Bolt (M4*L20)	4
H-256	11029SC-4113	Hex. Socket Bolt (M4*L20)	4
H-257	06011SW-2111	Washer (@3)	4
H-258	03900010H000	Upper Thread Holder Base Set	4
H-259	15105SC-7113	Hex.Socket Screw (M4*L15)	4
H-260	18014SW-3115	Spring Washer (@4-No2)	4
H-261	18015SW-3111	Washer (4@)	4
H-262	03072MC-4113	HEX. SOCKET BOLT (M8*L28)	12
H-263	15105SC-7113	HEX.SOCKET SCREW (M4*L15)	12

Ref. No	Part No.	Part Names	Q'ty
H-264	07016SC-7113	HEX.SOCKET BOLT (M4*L12)	8
H-265	03600010H000	NEEDLE BAR REECIPROCATOR SET	4
H-266	03800010H000	PRESSER FOOT RECIPROCATOR SET	4
H-267	03007900K000	NEEDLE BAR DRIVING SHAFT	4
H-268	03304710A000	NEEDLE BAR DRIVING SHAFT BUSH	4

H1

Arm II

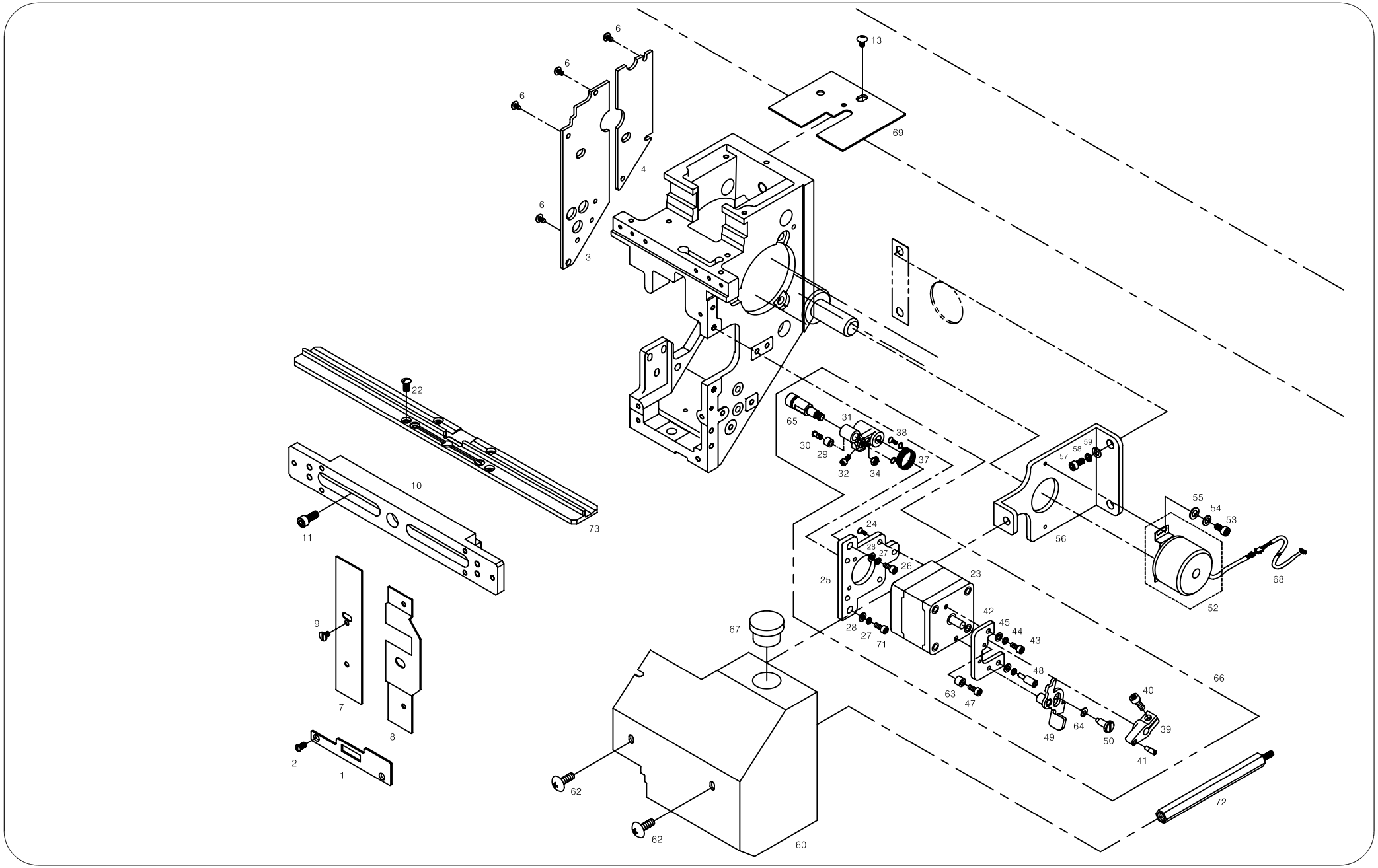
6
6
6
6
4
3
13
69
22
10
11
73
65
31
38
30
29
37
32
34
57
58
59
55
54
53
56
52
68
24
28
27
26
25
23
42
45
44
43
28
27
71
67
48
63
47
66
40
39
64
50
49
41
9
7
8
2
1
62
62
60
72

Ref.No	Part No.	PartNames	Q'ty
H1001	03302610H000	Arm Bearing Guide Plate @20	4
H1002	05062SC-A001	Thread Guide (L) Screw	8
H1003	03302210H000	Side Cover "A" @20	4
H1004	03302310H000	Side Cover "B1" @20	4
H1006	02009SC-A001	Side Cover Screw	24
H1007	03008200H000	Arm Guard Plate "L" @20	4
H1008	03303800H000	Arm Guard Plate "R" @20	4
H1009	03065SC-A001	Guard Plate Screw	16
H1010	03070LM-BE00	Lm Guide Block Set (6C)	4
	03068LM-BB00	Lm Guide Block Set (12C)	
	03068LM-H003	Lm Guide Block Set (15C)	
H1011	03071SC-A001	Hex.Scoket Bolt (M3*L15)	24
H1013	02009SC-A001	Side Cover Screw	4
H1022	05041SC-A001	Guide Rail Serew	16
H1023	03410200H000	Jump Motor (103H548-0496)	4
H1024	08014SC-A001	Plus Screw (M3*L8)	16
H1025	03410100H000	Jump Motor Base	4
H1027	18014SW-3115	Spring Washer (@4-No2)	12
H1028	06003SW-2111	Washer (@4)	12
H1029	03410300H000	Jump Crank Stopper	4
H1030	03411400H000	Jump Crank Stopper Stud Screw	4
H1031	03410400H000	Jump Driving Crank	4
H1032	02023SC-7113	Hex.Socket Bolt (M4*L8)	4
H1034	03031SN-A001	Pin. Nut (11/64,N=40)	4
H1037	03410800H000	Jump Return Spring	4
H1038	08006SC-8118	Plus Screw (M3*L5)	8
H1039	03410900H000	Jump Driving Clutch	4
H1040	02023SC-7113	Hex.Socket Bolt (M4*L8)	4
H1041	03411000H000	Jump Driving Clutch Pin	4
H1042	03411100H000	Jump Clutch Base	4
H1043	22006SC-7113	Hex. Socket Set Screw(M3*L8)	4
H1044	11019SW-9115	Spring Washer (3@)	8
H1045	06011SW-2111	Washer (@3)	8
H1047	15105SC-7113	Hex.Socket Screw (M4*L15)	4
H1048	03411600H000	Jump Clutch Stopper Screw	4
H1049	03411200H000	Jump Driving Clutch Lever	4
H1050	03411300H000	Jump Clutch Lever Stud Bolt	4
H1052	03013EL-T121	Encoder Set	1
H1053	07035SC-7113	Bracket Screw (M3*L6)	2
H1054	08011SW-1111	Spring Washer (@3-S)	2

Ref. No	Part No.	Part Names	Q'ty
H1055	06011SW-2111	Washer (@3)	2
H1056	05000100H000	Encoder Base	1
H1057	08076SC-7113	Hex. Socket Bolt (M5*L12)	4
H1058	16018SW-1111	Washer (@5)	2
H1059	18048SW-3115	Spring Washer (@5)	2
H1060	02003500UK40	Oil Tank Cover (4 Head)	1
H1062	05008MC-9123	TRUSS SCREW(M5*L8) SUS	2
H1063	03304900H000	Upper Thread Holder Stopper	4
H1064	03411900H000	Jump Clutch Plate Spring	4
H1065	03411810H000	Jump Crank Roller Set	4
H1066	03410000H000	Jump Set	4
H1067	01303800U000	Cover Rubber Cap	1
H1068	25033EL-UK01	ENCODER CABLE (4HT-33)	1
H1069	GP-007318-00	ARM TOP COVER	4
H1071	07016SC-7113	HEX.SOCKET BOLT (M4*L12)	12
H1072	18036CW-UK06	OIL TANK COVER SUPPORT	1
H1073	07027AD-AE00	TAKE-UP GUIDE RAIL (6C)	4
	03300604U000	TAKE-UP GUIDE RAIL (12C)	4
	01300105U000	TAKE-UP GUIDE RAIL (L) (15C)	1
	01300205U000	TAKE-UP GUIDE RAIL (M) (15C)	2
	01400105U000	TAKE-UP GUIDE RAIL (R) (15C)	1

H2

Arm III

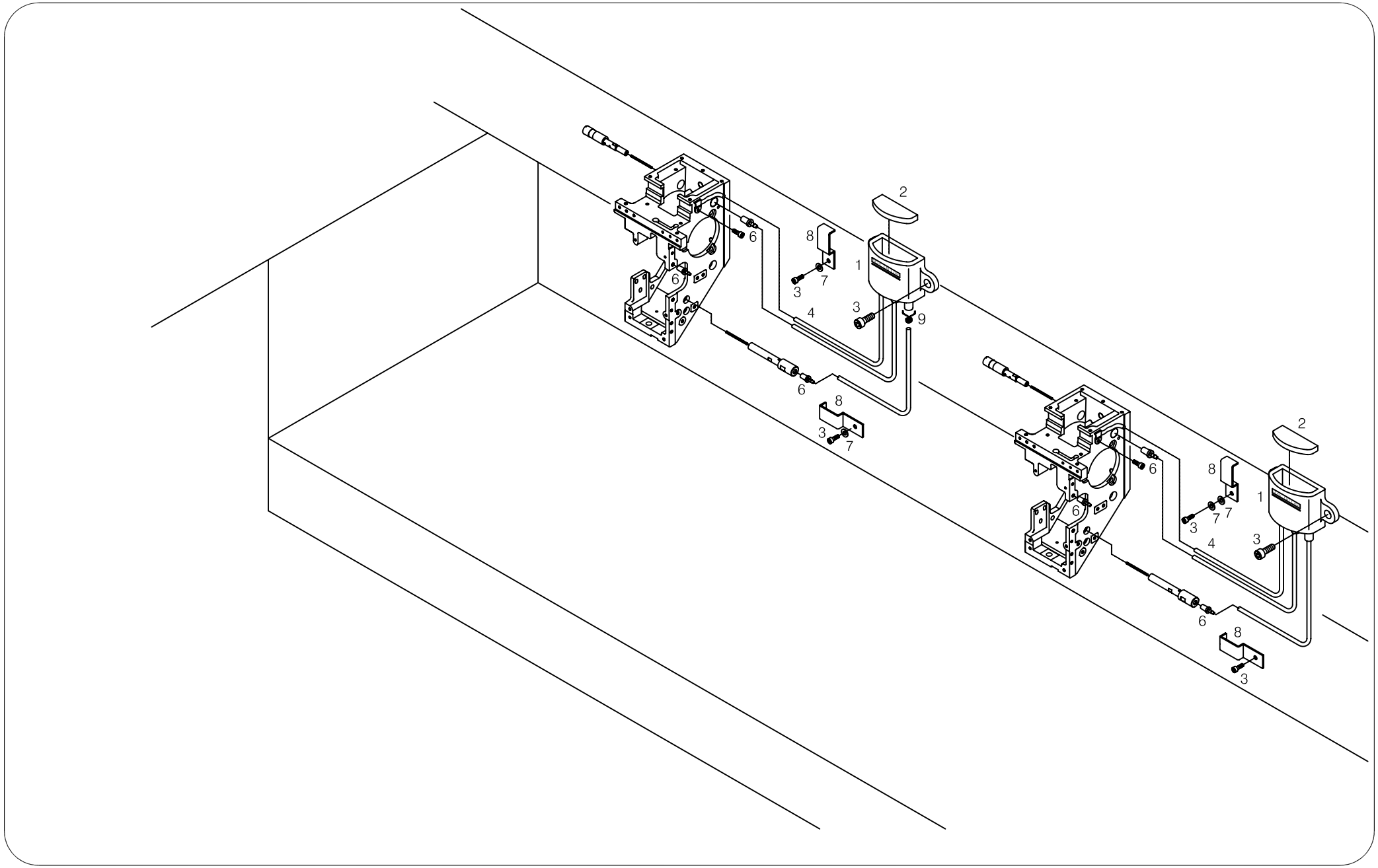

Ref. No	Part No.	Part Names	Q'ty
H2001	32000100UK40	Oil Tank Ass'Y	4
H2002	32000500UK40	Oil Tank Felt	4
H2003	02023SC-7113	Hex. Socket Bolt (M4*L8)	16
H2004	18045ET-UK01	Oil Hose L=160	16
H2006	03000500U000	Oil Tube Pin	12
H2007	18015SW-3111	WASHER (4@)	8
H2008	18033PR-UK01	OIL TUBE GUIDE	8
H2009	32046SP-T121	HOLDER FOR OIL HOSE	12

Ref. No	Part No.	Part Names	Q'ty

I

Color Change Set

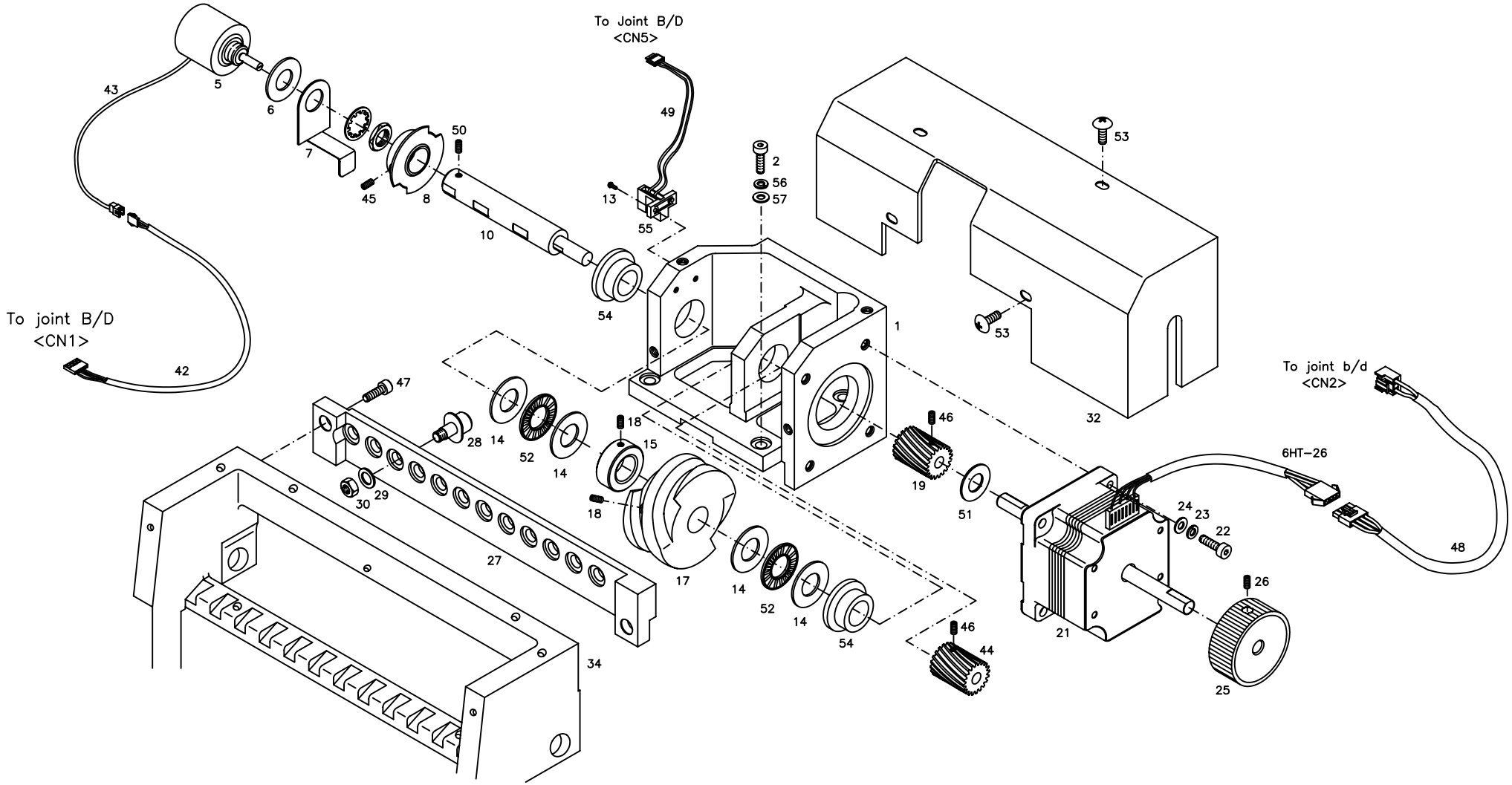

Ref. No	Part No.	Part Names	Q'ty
I-001	13001CA-UK06	Color Change Base	1
I-002	05008SC-4113	Hex.Socket Bolt (M4*L16)	4
I-005	15012MT-T121	Potentiometer (7824 R1K L25)	1
I-006	15014PR-T121	Potentiometer Washer	1
I-007	13015PR-UK06	Potentiometer Bracket	1
I-008	13032AD-UK06	Color Change Film Set	1
I-010	13007CW-UK06	Color Change Shaft	1
I-013	08006SC-8118	Plus Screw (M3*L5)	2
I-014	13010BR-T121	Washer(@12*@26*1T)	4
I-015	13010CW-UK06	Color Change Collar	1
I-017	13005CM-UK06	Color Change Cam	1
I-018	04012AF-A001	Hook Shaft Bush Screw	5
I-019	13020GA-UK06	Color Change Gear (L)	1
I-021	13016MT-UK06	Color Change Motor	1
I-022	05008SC-4113	Hex.Socket Bolt (M4*L16)	4
I-023	02028SW-9115	Spring Washer (@4)	4
I-024	05009SW-1111	Washer (@4-L)	4
I-025	13022AD-UK06	Color Change Passivity Handle	1
I-026	03020SC-A001	Drive Pin Screw 11/64,N40,L8	2
I-027	08103102C010	Color Change Roller Base (6C)	1
	13026CL-UK06	Color Change Roller Base (12C)	
	13026CL-UK16	Color Change Roller Base (15C)	
I-028	15029AF-T121	Roller Set	12
I-029	18048SW-3115	Spring Washer (@5)	12
I-030	12010SN-1211	Hex.Nut (M5)	12
I-032	13024PR-UK06	Color Change Cover	1
I-035	05000103UK00	Color Change Shaft (6C)	1
	23007SH-UK01	Color Change Shaft (12C)	
	23007SH-UK14	Color Change Shaft (15C)	
I-042	25035EL-UK01	Cc Poten. Meter To J/B(4Ht-35)	1
I-043	25036EL-UK01	Cc Potentiometer Cable(4Ht-36)	1
I-044	13021GA-UK06	Color Change Gear (R)	1
I-045	04014SC-4517	Hex.Socket Set Screw(M5*L5)	2
I-046	08113SC-A001	Collar Screw	4
I-047	18047SC-7113	Hex/ Socket Bolt (M5*L15)	2
I-048	25029EL-UK01	C/C Motor Cable (2Ht-28)	1
I-049	25037EL-UK01	Half Turn Cable (2Ht-36)	1
I-050	08113SC-A001	Collar Screw	1
I-051	13019PR-A001	Half Turm Film Washer (T1.0)	1
I-052	13041BR-UK01	Washer(12*@26*1T)	2

Ref. No	Part No.	Part Names	Q'ty
I-053	04006MC-9123	Truss Screw (M4*L6) SUS	4
I-054	GP-006252-00	Cam Bushing	2
I-055	08102300B000	Half Turn Sensor (Gp1S51V)	1
I-056	18014SW-3115	Spring Washer (@4-No2)	4
I-057	18015SW-3111	Washer (4@)	4

J

Wiper Set

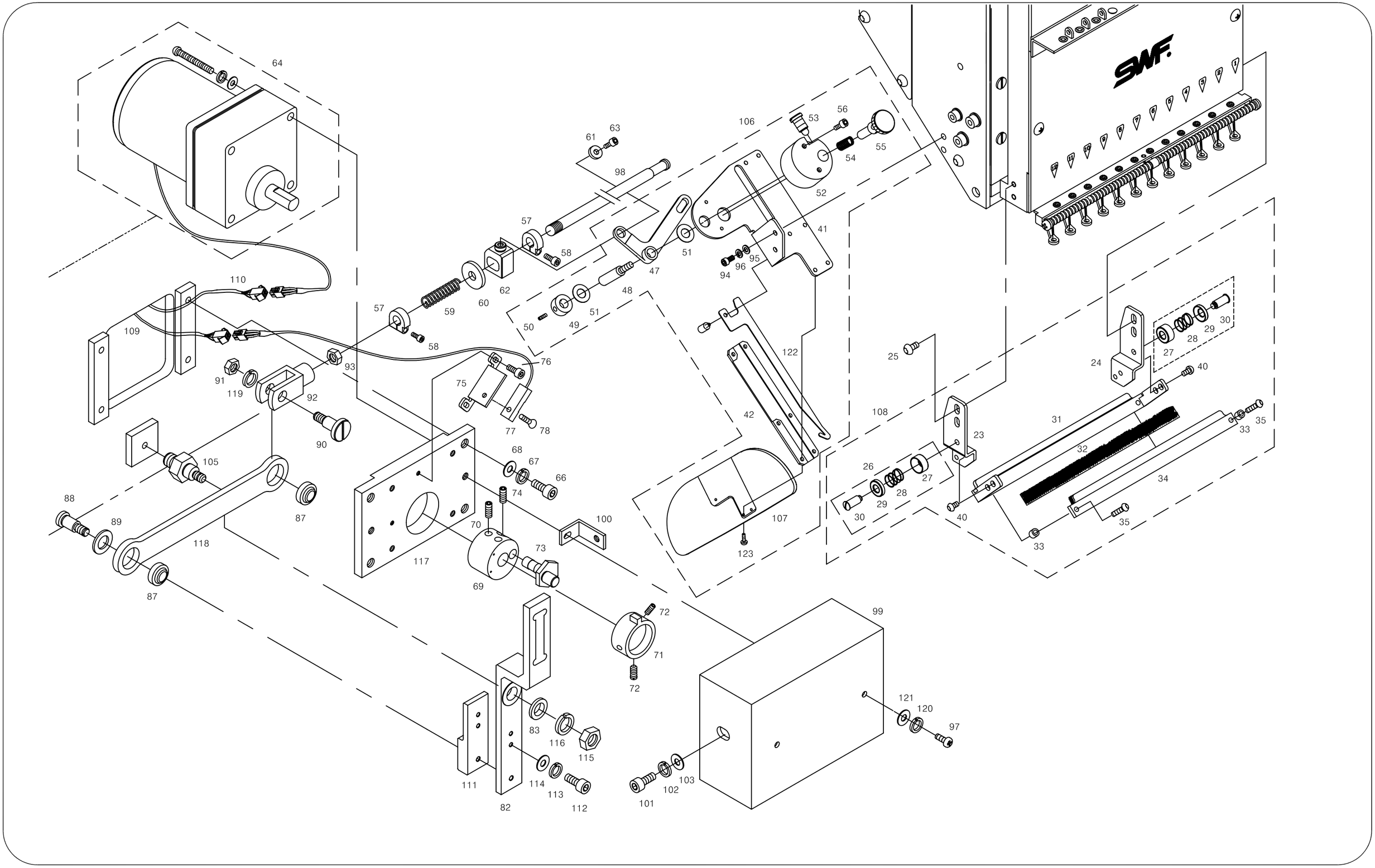
64
63
61
98
106
53
56
55
54
52
41
57
58
51
47
95
96
94
62
60
59
48
51
49
50
110
109
93
91
119
92
90
76
75
77
78
42
122
25
24
30
29
28
27
40
108
23
31
32
33
35
34
26
27
28
29
30
40
35
33
107
123
105
88
89
87
118
87
68
67
66
74
70
100
73
69
117
72
71
72
99
121
120
97
83
116
115
111
114
113
112
82
101
102
103

Ref.No	Part No.	PartNames	Q'ty
J-023	09040PR-A001	Bracket (L)	4
J-024	09041PR-A001	Bracket (R)	4
J-025	02009SC-A001	Side Cover Screw	16
J-026	09044PR-A001	Upper Thread Holder Disk Set	8
J-027		Upper Thread Holder Disk "A"	8
J-028		Spring	8
J-029		Upper Thread Holder Disk "B"	8
J-030		Upper Thread Holder Stud	8
J-031	09034PR-AE00	Upper Thread Presser Base (6C)	4
	09026PR-AB00	Upper Thread Presser Base (12C)	
	09052PR-T151	Upper Thread Presser Base (15C)	
J-032	09035ET-AE00	Velcro (6C)	8
	09027ET-AB00	Velcro (12C)	
	09027ET-T151	Velcro (15C)	
J-033	09038CW-A001	Thread Presser Space	8
J-034	09037PR-AE00	Presser Base Cover (6C)	4
	09029PR-AB00	Presser Base Cover (12C)	
	09029PR-T151	Presser Base Cover (15C)	
J-035	07018SC-8118	Plus Screw (M3*L8)	8
J-040	06010SC-8118	Plus Screw (M3*L4)	16
J-041	03500110H000	Upper Thread Catcher Base	4
J-042	03500210H000	Upper Thread Hook Base Cover	4
J-047	03500500H000	Upper Catcher Driving Lever	4
J-048	03500600H000	Driving Lever Pin	4
J-049	03500700H000	Driving Lever Pin Collar	4
J-050	04014SC-4517	Hex.Socket Set Screw(M5*L5)	8
J-051	03500800H000	Driving Lever Pin Washer	8
J-052	03500900H000	Clutch Block	4
J-053	03501000H000	Clutch Stud Screw	4
J-054	03501100H000	Clutch Spring	4
J-055	03501200H000	Clutch Dial	4
J-056	11029SC-4113	Hex. Socket Bolt (M4*L20)	8
J-057	03002610H000	Return Spring Stopper	8
J-058	05008SC-4113	Hex.Socket Bolt (M4*L16)	8
J-059	03002700H000	Return Spring	4
J-060	03002800H000	Return Spring Stopper Washer	4
J-061	03002900H000	Return Spring Fix Pin Washer	4
J-062	03003000H000	Return Spring Fix Pin	4
J-063	02015SC-7113	Hex.Socket Bolt(M4*L10)	4
J-064	03003100H000	Upper Thread Hook Motor Unit	1

Ref. No	Part No.	Part Names	Q'ty
J-066	06025MC-7113	Hex.Socket Bolt(M6*L25)	4
J-067	16014SW-4115	Spring Washer (@6)	4
J-068	08057SW-1111	Washer (@6)	4
J-069	03003300H000	Cam Shaft Fixing Block	1
J-070	05008MC-4517	Hex.Socket Bolt(M5*L8)	2
J-071	GP-005184-00	SENSOR SENSING ADJUSTING RING	1
J-072	04014SC-4517	Hex.Socket Set Screw(M5*L5)	2
J-073	03003500H000	Motor Driving Cam Shaft	1
J-074	04014SC-4517	Hex.Socket Set Screw(M5*L5)	1
J-075	GP-005180-00	UPPER THREAD HOOK SENSOR BASE	1
J-076	07035SC-7113	BRACKET SCREW (M3*L6)	2
J-077	15-027A-2070	SENSOR	1
J-078	13061SC-8119	Plus Screw (M3*L10)	1
J-082	03003910H000	Upper Thread Driving Plate	1
J-083	03004000H000	Stud Bolt Washer	1
J-087	03004400H000	Motor Driving Connect Bearing	2
J-088	03008300H000	Connecting Plate Stud Screw A	1
J-089	03004500H000	Connecting Plate Pin Washer	1
J-090	03004700H000	Connecting Plate Stud Screw	1
J-091	13042SN-1111	Hex.Nut (M6*T5-R)	1
J-092	03004800H000	Connecting Plate Knuckle	1
J-093	04032SN-A001	Hex. Nut (M8-No2)	1
J-094	02023SC-7113	Hex.Socket Bolt (M4*L8)	8
J-095	18015SW-3111	Washer (4@)	8
J-096	18014SW-3115	Spring Washer (@4-No2)	8
J-097	02023SC-7113	Hex. Socket Bolt (M4*L8)	2
J-098	03007000UK40	Upper Thread Driving Shaft	1
J-099	12001900U000	Upper Thread Hook Motor Cover	1
J-100	03008600H000	Motor Cover Fixing Bracket	2
J-101	02023SC-7113	Hex.Socket Bolt (M4*L8)	2
J-102	18014SW-3115	Spring Washer (@4-No2)	2
J-103	18015SW-3111	Washer (4@)	2
J-105	03003810H000	Stud Bolt For Driving Plate	1
J-106	08500010U000	Upper Thread Catcher Set	4
J-107	12209100U000	Cap Guide	4
J-108	08600002B000	Upper Thread Base Set (6C)	4
	08600004B000	Upper Thread Base Set (12C)	
	08600005B000	Upper Thread Base Set (15C)	
J-109	02106600U040	Sh-66-2	1
J-110	02106700U040	Sh-67-2	1

J

Wiper Set

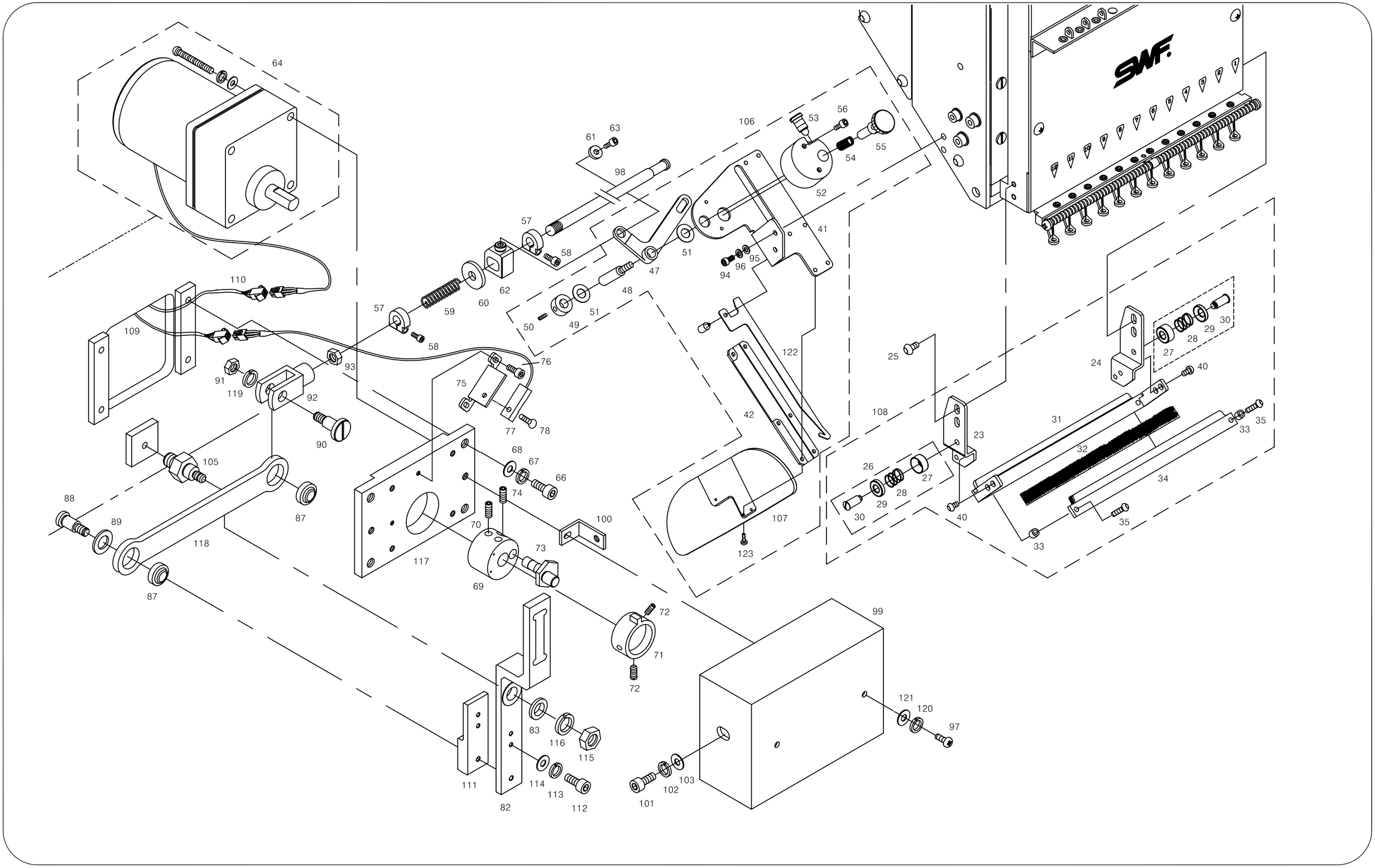
64
63
61
98
106
53
56
55
54
52
41
57
58
51
47
95
96
94
62
60
59
48
51
49
50
110
109
93
91
119
92
90
76
75
77
78
42
122
25
24
30
29
28
27
40
108
23
31
32
33
35
34
26
27
28
29
30
40
35
33
107
123
105
88
89
87
118
87
68
67
66
74
70
100
73
69
117
72
71
72
99
121
120
97
83
116
115
111
114
113
112
82
101
102
103

Ref.No	Part No.	PartNames	Q'ty
J-111	03004100H000	Driving Plate Block	1
J-112	18047SC-7113	Hex/ Socket Bolt (M5*L15)	2
J-113	18048SW-3115	Spring Washer (5@)	2
J-114	18049SW-3111	Washer (@5)	2
J-115	04032SN-A001	Hex. Nut (M8-No2)	1
J-116	15095SW-3115	Spring Washer (@8)	1
J-117	03003210H000	MOTOR BASE	1
J-118	03004200HH00	MOTOR DRIVING CONNECT PLATE	1
J-119	16014SW-4115	SPRING WASHER (@6)	1
J-120	18014SW-3115	SPRING WASHER (@4-NO2)	1
J-121	18015SW-3111	WASHER (4@)	1
J-122	03500330H000	Upper Thread Hook	4
J-123	03005MC-3123	TRUSS SCREW (M3*L5)	24

Ref. No	Part No.	Part Names	Q'ty

K

Head

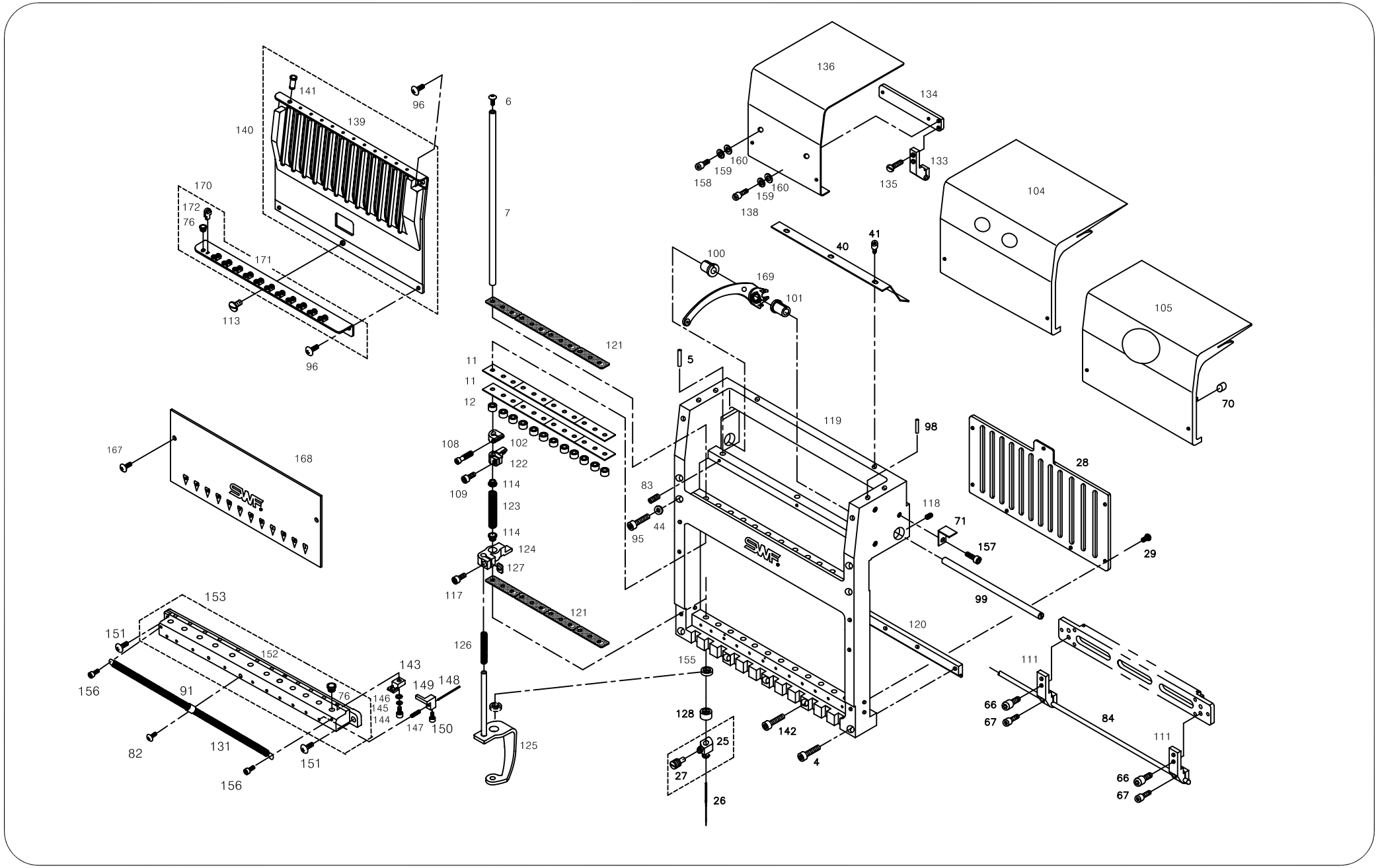
141
96
140
139
170
172
76
171
113
96
6
7
121
11
11
12
108
102
122
109
114
123
114
124
127
117
121
126
125
136
134
160
159
158
160
159
138
133
135
104
41
40
100
169
101
105
70
5
119
98
28
167
168
83
44
95
118
71
157
29
99
153
151
152
156
91
76
146
145
144
143
149
148
147
150
82
131
151
156
155
128
25
27
26
142
4
120
111
66
67
84
111
66
67

Ref.No	Part No.	PartNames		Q'ty
K-004	05014SC-7113	Hex. Socket Bolt (M4*L25)		40
K-005	05015CW-A001	Head Base Pin(@5*L15)		8
K-006	05019SC-A001	Needle Bar Cover Screw (M5*L6)		48
K-007	05018CW-A001	Needle Bar		48
K-011	05023RB-A001	Needle Bar Cushion Rubber "A"		32
K-012	05024RB-A001	Needle Bar Cushion Rubber "B"		48
K-025	05036CW-A001	Needle Fixed Holder		48
K-026	05037DB-A001	Needle (Db-K5, #11)		48
K-027	05363SC-A001	Needle Fixed Screw (A/S)		48
K-028	05040PM-AE00	Needle Bar Guide Rail	(6C)	4
	05038PM-AB00	Needle Bar Guide Rail	(12C)	
	05038PM-H003	Needle Bar Guide Rail	(15C)	
K-029	05041SC-A001	Guide Rail Serew		32
K-040	11048PR-AE00	Cable Support Plate "B"	(6C)	3
	11046PR-AB00	Cable Support Plate "B"	(12C)	
	11046PR-H003	Cable Support Plate "B"	(15C)	
K-041	02023SC-7113	Hex. Socket Bolt (M4*L8)		12
K-044	06003SW-2111	Washer (@4)		16
K-066	02031SC-7113	Hex. Socket Screw(M5*L10)		16
K-067	02015SC-7113	Hex.Socket Bolt(M4*L10)		8
K-070	02023ET-A001	Top Shaft Cover Magnet		6
K-071	02022PR-UK01	Upper Shaft Cover "B" Bracket		2
K-076	05452CM-A001	Eyelet "A"		96
K-082	05060SC-8118	Screw (M3*L3)		4
	05060SC-8118	Screw (M3*L3)		8
K-083	03022SC-4517	Hex. Socket Set Screw(M4*L5)		8
K-084	05000103UK00	Color Change Shaft	(6C)	1
	23007SH-UK01	Color Change Shaft	(12C)	
	23007SH-UK14	Color Change Shaft	(15C)	
K-091	10400304B000	Spring Holder	(12C)	4
	10400304B000	Spring Holder	(15C)	8
K-095	05008SC-4113	Hex.Socket Bolt (M4*L16)		16
K-096	05070SC-3123	Head Face Plate (U) Screw		16
K-098	01303700H000	Tension Plate Pin		8
K-099	08200602A000	Take-Up Lever Shaft	(6C)	4
	08200404A000	Take-Up Lever Shaft	(12C)	
	07004SF-T151	Take-Up Lever Shaft	(15C)	
K-100	08203000A000	Take-Up Lever Shaft Bush(L)		4
K-101	08200800A000	Take-Up Lever Shaft Bush(R)		4
K-102	11101200T000	Upper Dead Point Stopper		48

Ref.No	Part No.	PartNames		Q'ty
K-104	09000104UK00	Top Shaft Cover "A"		1
K-105	09000204UK00	Top Shaft Cover "B"		1
K-108	05026SC-4113	Stopper Screw (9/64-11.5)		48
K-109	05028SC-4113	Holder Screw (9/64-L8)		48
K-111	08004900A000	Color Change Bracket "B"		7
K-113	05062SC-A001	Thread Guide (L) Screw		4
K-114	05021PM-H001	Presser Foot Spring Guide		48
K-117	05026SC-H001	Presser Foot Holder Screw		48
K-118	07009SC-4517	Hex.Socket Set Screw (M5*L6)		8
K-119	08200102U000	Head	(6C)	4
	08200104U000	Head	(12C)	
	08200105U000	Head	(15C)	
K-120	05200BM-UK24	Head Rail	(6C)	4
	08201304H000	Head Rail	(12C)	
	08201305H000	Head Rail	(15C)	
K-121	08200700H000	Needle Bar Felt		48
K-122	08201400H000	Needle Bar Holder		48
K-123	08200800H000	Needle Bar Return Spring		48
K-124	08200900H000	Presser Foot Holder Set		48
K-125	08200510H000	Presser Foot (Hight Speed)		48
K-126	08201000H000	Presser Foot Return Spring		48
K-127	08201100H000	Presser Foot Spacer		48
K-128	08201200H000	Presser Foot Cushion Rubber A		48
K-131	10800502H000	Thread Guide Spring	(6C)	4
	10800504H000	Thread Guide Spring	(12C)	
	10800505H000	Thread Guide Spring	(15C)	
K-133	08004700A000	Color Change Bracket "A"		1
K-134	09000200H000	Top Shaft Cover (L) Bracket		1
K-135	13048SC-A001	Bracket "A" Screw		2
K-136	01001400UK00	Top Shaft Cover (L)		1
K-138	02015SC-7113	Hex.Socket Bolt(M4*L10)		1
K-139	10200102B000	Head Face Plate (U)	(6C)	4
	10200104B000	Head Face Plate (U)	(12C)	
	10200105B000	Head Face Plate (U)	(15C)	
K-140	10200012H000	Thread Guide (U) Set	(6C)	4
	10200014H000	Thread Guide (U) Set	(12C)	
	10200015H000	Thread Guide (U) Set	(15C)	
K-141	10200100H000	Eyelet "A-1"		48
K-142	05014SC-7113	Hex. Socket Bolt (M4*L25)		12
K-143	10900200H000	Upper Thread Holder Block		48

K

Head

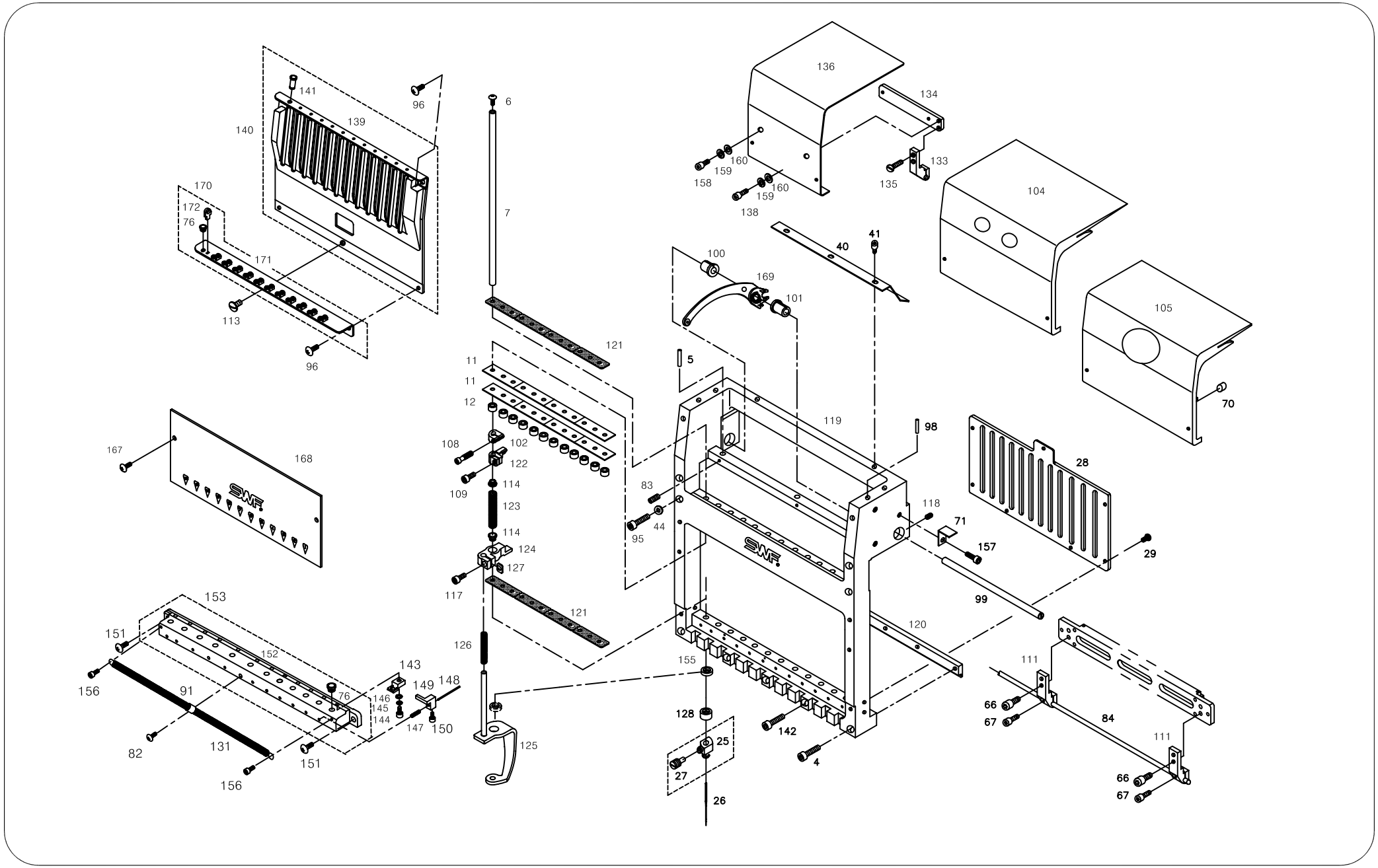
141
96
140
139
170
172
76
171
113
96
6
7
121
11
11
12
108
102
122
109
114
123
114
124
127
117
121
126
125
136
134
160
159
158
160
159
138
133
135
104
41
40
100
169
101
105
70
5
119
98
28
167
168
83
44
95
118
71
157
29
99
153
151
152
156
91
76
146
145
144
143
149
148
147
150
82
131
151
156
155
128
25
27
26
142
4
120
111
66
67
84
111
66
67

Ref. No	Part No.	Part Names	Q'ty
K-144	03010MC-4135	Holder Block Screw	48
K-145	11019SW-9115	Spring Washer (3@)	48
K-146	06011SW-2111	Washer (@3)	48
K-147	10900300H000	Upper Thread Holder Spring	48
K-148	10900400H000	Upper Thread Holder Pin	48
K-149	10900500H000	Upper Thread Holder Clamp	48
K-150	03006MC-4535	Thread Holder Clamp Screw	48
K-151	05070SC-3123	Head Face Plate (U) Screw	8
K-152	10900104H000	Upper Thread Holder Apron 12C	4
K-153	10900014H000	Upper Thread Holder Apron Set	4
K-155	08201500H000	PRESSER FOOT CUSHION RUBBER B	48
K-156	03004MC-7113	HEX. SOCKET BOLT (M3*L4)	8
K-157	02023SC-7113	HEX. SOCKET BOLT (M4*L8)	2
K-158	02023SC-7113	HEX. SOCKET BOLT (M4*L8)	1
K-159	18014SW-3115	SPRING WASHER (@4-NO2)	2
K-160	18015SW-3111	WASHER (4@)	2
K-167	05070SC-3123	HEAD FACE PLATE (U) SCREW (9/64",N=40,L10)	8
K-168	05000102U000	Head Face Plate (L) (6C)	4
	05000114U000	Head Face Plate (L) (12C)	
	05000115U000	Head Face Plate (L) (15C)	
K-169	07005BM-B002	TAKE-UP LEVER SET	48
K-170	10300002A000	Thread Guide (M) Set (6C)	4
	10300004A000	Thread Guide (M) Set (12C)	
	10300005A000	Thread Guide (M) Set (15C)	
K-171	10300112A000	Thread Guide (M) (6C)	4
	10300114A000	Thread Guide (M) (12C)	
	10300115A000	Thread Guide (M) (15C)	
K-172	10110000A000	Eyelet "B" (6C)	24
	10110000A000	Eyelet "B" (12C)	48
	10110000A000	Eyelet "B" (15C)	60

Ref. No	Part No.	Part Names	Q'ty

L

Thread Tension Unit

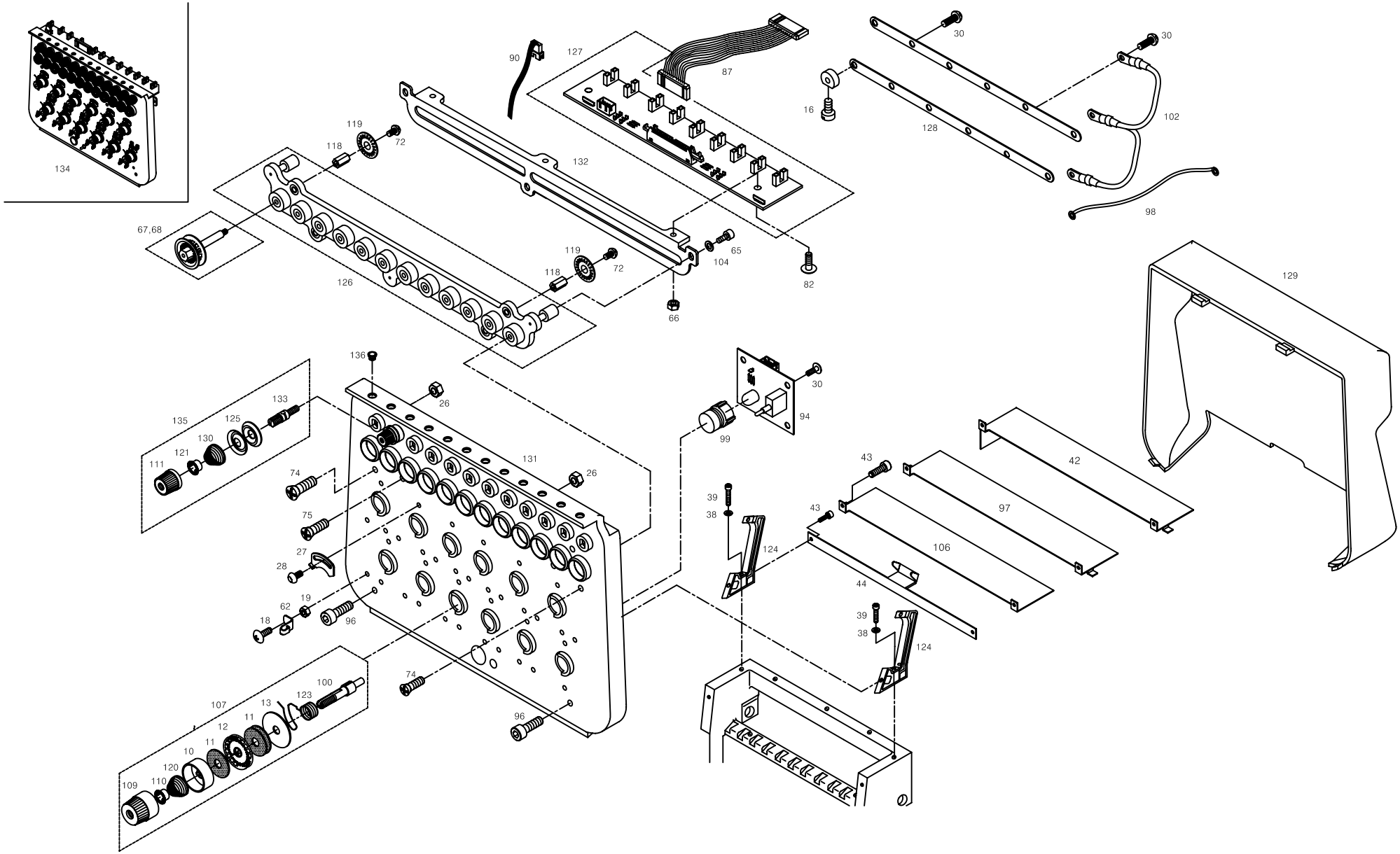

Ref. No	Part No.	Part Names	Q'ty
L-010	11086PM-A001	Tension Spring Collar	48
L-011	11084AF-A001	Felt	144
L-012	11085AF-A001	Rotary Tension Disc	48
L-013	11083PM-A001	Disc Plate	48
L-016	11009SC-A001	Stud Screw	48
L-018	09005SC-3123	Truss Screw (M3*L6)	120
L-019	11014SN-1211	Hex.Nut (M3-No2)	120
L-026	03031SN-A001	Pin. Nut (11/64,N=40)	48
L-027	11009PR-B001	Thread Breakage Detecting Plat	48
L-028	09005SC-3123	Truss Screw (M3*L6)	48
L-030	09005SC-3123	Truss Screw (M3*L6)	48
L-038	05009SW-1111	Washer (@4-L)	8
L-039	11029SC-4113	Hex. Socket Bolt (M4*L20)	8
L-042	02009PR-UK01	Cover Plate (L)	1
L-043	02023SC-7113	Hex. Socket Bolt (M4*L8)	6
L-044	11032PR-T121	Cable Supporter 12C	1
L-045	02010AF-3123	Truss Screw (M4*L8)	2
L-062	11012PR-B001	Thread Guide (New) (12C)	120
L-065	02023SC-7113	Hex.Socket Bolt (M4*L8)	12
L-066	05016SN-1211	Hex.Nut (M4)	12
L-067	11075PM-B001	Thread Sensor Roller(B1)Set (6C)	24
	11075PM-B001	Thread Sensor Roller(B1)Set (12C)	48
	11075PM-B001	Thread Sensor Roller(B1)Set (15C)	28
L-068	11076PM-B001	Thread Sensor Roller(B2)Set (15C)	32
L-072	08011SC-8118	Screw (M2*L4)	48
L-074	15089SC-7119	C.S Screw (M4*L10)	8
L-075	02002SC-7119	Pluss Screw (M4*L8)	20
L-082	02010SC-3123	Truss Screw (M4*L8)	12
L-087	02102200U000	Plate To B/B Cable	4
L-090	02101800B000	Plate Led S/W Board Cable	4
L-094	03-0000-EMB1	Head On/Off S/W Board 6C,12C	4
	02-0000-EMB1	Head On/Off S/W Board 9C,15C	
L-096	04010MC-7113	Hex.Socket Bolt (M4*L10)	8
L-097	11031PR-AB00	Cover Plate 12C	1
L-098	25126EL-B001	Sensor Board To Wheel Earth	4
L-099	08300400A000	Lamp Cover	4
L-100	11081CW-A001	Thread Tension Adjusting Stud	48
L-102	02103903H000	Wheel Earth 6,9,12C	4
	25124EL-B001	Tension Plat Earth Cable 15C	
L-104	06003SW-2111	Washer (@4)	12

Ref. No	Part No.	Part Names	Q'ty
L-106	08003204B000	COVER PLATE (R) 12C	1
	02006PR-UK14	COVER PLATE (R) 15C	
L-107	08310000B000	TENSION ADJUSTING SET	48
L-109	08300500A000	TENSION ADJUSTING NUT	48
L-110	08300700A000	TENSION SPRING STOPPER	48
L-111	08300600A000	SUB TENSION ADJUSTING NUT(A)	48
L-118	08308300B000	THREAD DETECTING WHEEL STUD (6C)	24
	08308300B000	THREAD DETECTING WHEEL STUD (12C)	48
	11083CW-B001	THREAD DETECTING WHEEL STUD (15C)	60
L-119	GP-005179-00	THREAD BREAKAGE DETECTING WHEEL	48
L-120	08300800A000	TENSION ADJUSTING SPRING	48
L-121	11088PM-A001	TENSION SPRING STOPPER	48
L-123	11082AF-A001	THREAD TAKE-UP SPRING	48
L-124	08202000A000	TENSION ADJUSTING PLATE HOLDER (6C)	8
	08202000I000	TENSION ADJUSTING PLATE HOLDER (12C)	
	11020PM-B001	TENSION ADJUSTING PLATE HOLDER (15C)	
L-125	08301200I000	TENSION DISC	96
L-126	08300702I000	ROLLER BASE (6C)	4
	08300704I000	ROLLER BASE (12C)	
	08300705I000	ROLLER BASE (15C)	
L-127	18009EL-WH06	WHEEL SENSOR BOARD (6C)	4
	20009EL-WH12	WHEEL SENSOR BOARD (12C)	
	20009EL-WH15	WHEEL SENSOR BOARD (15C)	
L-128	08300302I000	CONNECTION PLATE (6C)	8
	08300304I000	CONNECTION PLATE (12C)	8
	08300305I000	CONNECTION PLATE "A" (15C)	4
	08300405I000	CONNECTION PLATE "B" (15C)	4
L-129	08000804I000	TENSION PLATE COVER (12C)	4
	08000805I000	TENSION PLATE COVER (15C)	
L-130	08301100I000	TENSION SPRING	48
L-131	08300102I000	TENSION UNIT PLATE (6C)	4
	08300104I000	TENSION UNIT PLATE (12C)	
	08300105I000	TENSION UNIT PLATE (15C)	
L-132	08300202I000	BOARD BASE (6C)	4
	08300204I000	BOARD BASE (12C)	
	08300205I000	BOARD BASE (15C)	
L-133	08301000I000	TENSION ADJUSTING STUD	48
L-134	08300002I000	TENSINO UNIT SET (6C)	4
	08300004I000	TENSINO UNIT SET (12C)	
	08300005I000	TENSINO UNIT SET (15C)	

L

Thread Tension Unit

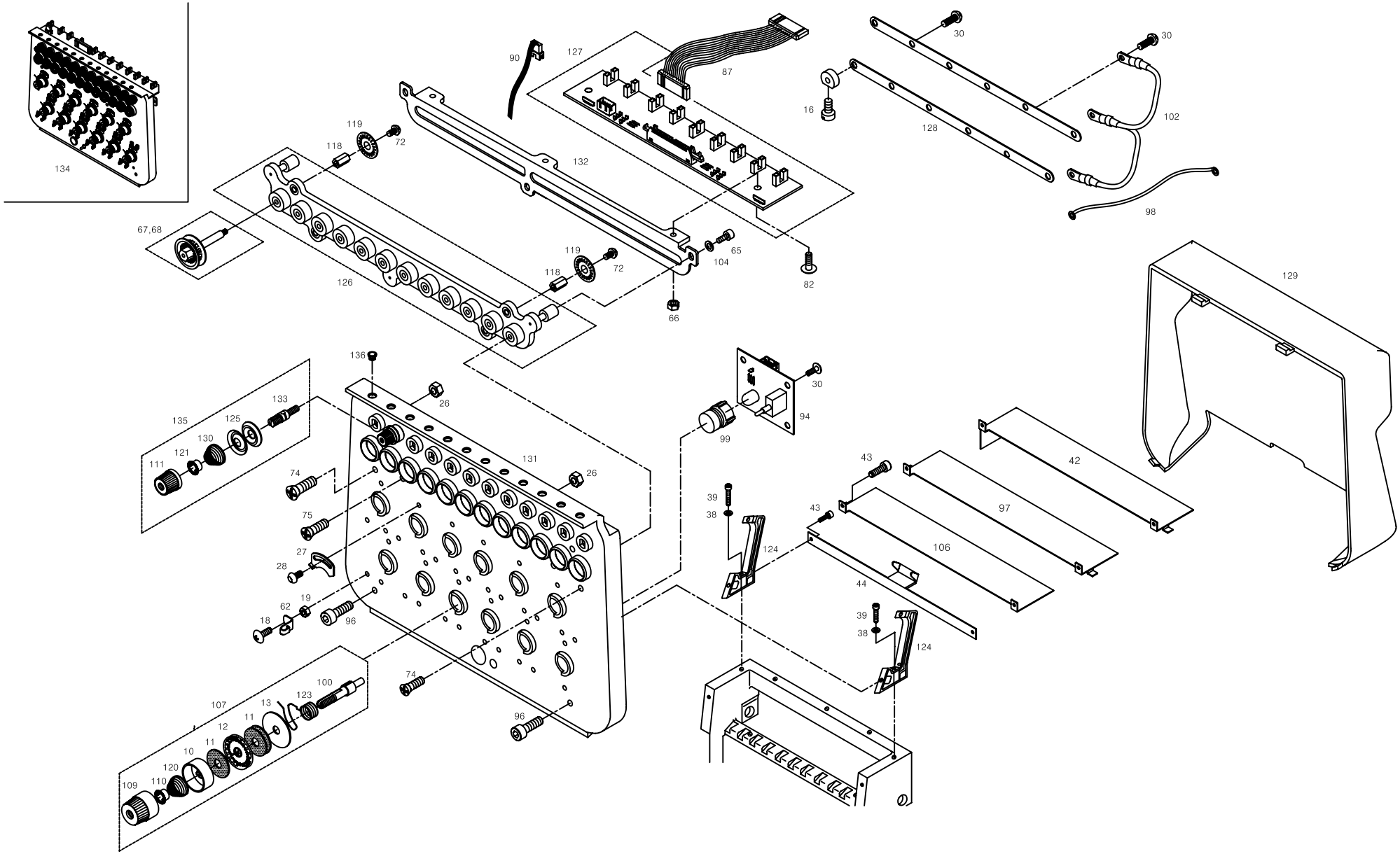

Ref. No	Part No.	Part Names	Q'ty
L-135	08320000I000	SUB TENSION ADJUSTING SET	48
L-136	05452CM-A001	EYELET "A"	48

Ref. No	Part No.	Part Names	Q'ty

M

X-Axis Drive Set

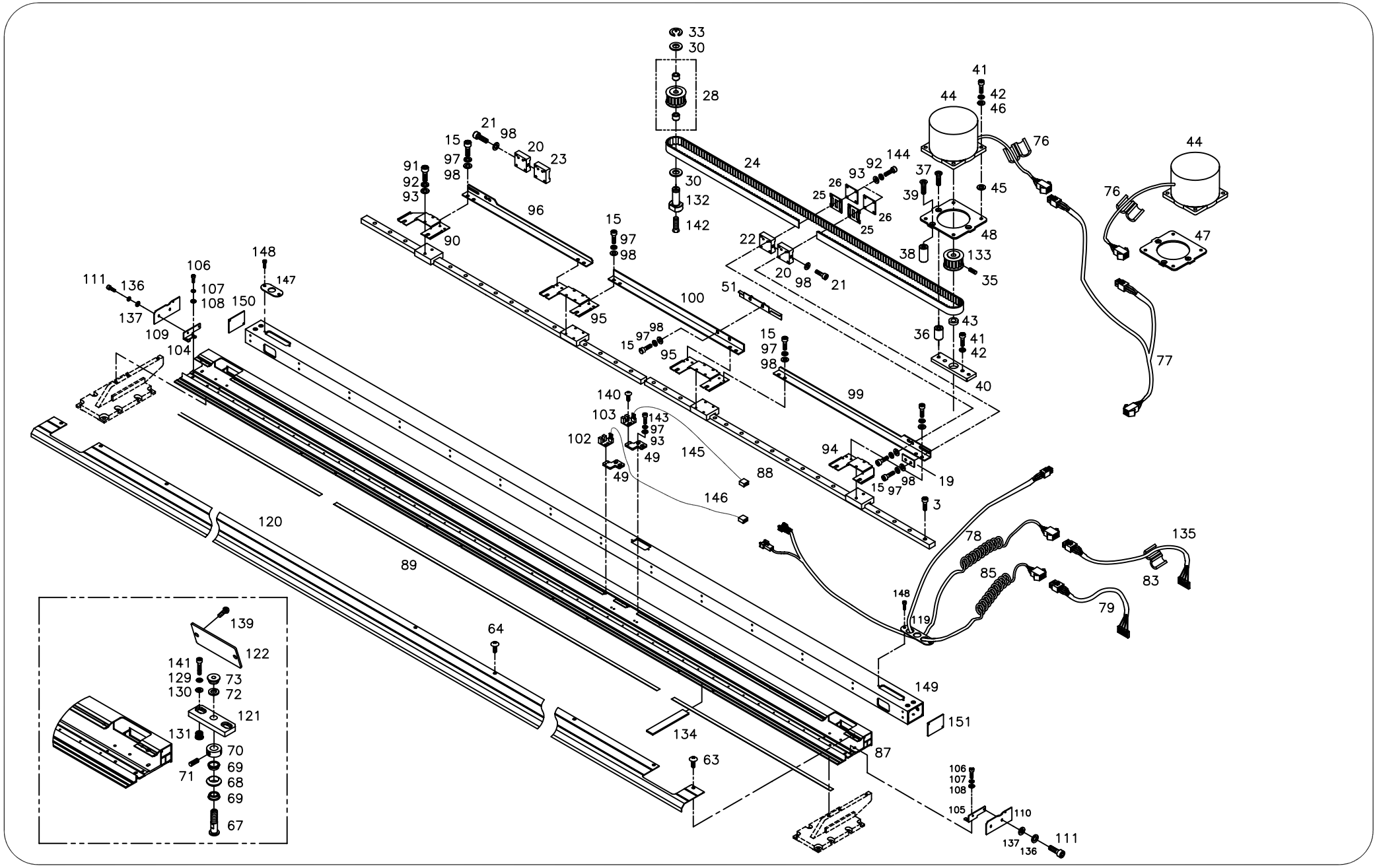

Ref.No	Part No.	PartNames	Q'ty
M-003	22006SC-7113	Hex. Socket Bolt (M3*L8)	62
M-015	02023SC-7113	Hex. Socket Bolt (M4*L8)	32
M-019	14020PR-UK01	Space	2
M-020	14045AD-UK01	Belt Bracket (B)	2
M-021	15034SC-4113	Hex. Socket Boit (M4*L45)	2
M-022	14049AD-UK01	Belt Bracket (C)	1
M-023	14048AD-UK01	Belt Bracket (A)	1
M-024	12048BT-T121	X-Axis Timing Belt	2
M-025	14051PR-UK01	Fixing Plate	4
M-026	14052PR-UK01	Fixing Plate Holder	4
M-028	12017PU-T121	Timing Pulley "A"	2
	12018BR-T121	Neddle Bearing Hk1010(Ina)	4
M-030	12019BR-T121	Fiber Washer R-Tw1020	4
M-033	08044SR-4013	E-Ring (@8)	2
M-035	04014SC-4517	Hex.Socket Set Screw(M5*L5)	4
M-036	14065AD-UK01	Motor Fixing Shaft (A)	4
M-037	15053SC-4119	Plus Screw (M5*L30)	4
M-038	14067AD-UK01	Motor Fixing Shaft (B)	2
M-039	15055SC-4119	Plus Screw (M5*L35)	2
M-040	14069AD-UK01	Motor Block	2
M-041	08076SC-7113	Hex. Socket Bolt (M5*L12)	12
M-042	18048SW-3115	Spring Washer (@5)	12
M-043	14071BR-UK01	Bearing Bc616Zz	2
M-044	15076AF-UK01	X-Motor (103H8221-5044)	2
M-045	15061PR-UK01	Motor Space (@5*@11*2T)	8
M-046	16018SW-1111	Washer (@5)	8
M-047	14074PR-UK01	Motor Base (L)	1
M-048	14075PR-UK01	Motor Base (R)	1
M-049	15067PR-UK01	Sensor Plate	2
M-051	15071PR-UK01	Perception Plate	1
M-063	15042SC-3123	Truss Screw (M4*L6)	12
M-064	18153SC-3123	Plus Screw (M4*L10)	2
M-067	15104CW-UK01	Roller Stud Bolt	2
M-068	15130AF-A001	Roller Guide	2
M-069	15106BR-A001	Flange Bearing (1280Zz)	4
M-070	15107CW-UK01	Roller Collar	2
M-071	03022SC-4517	Hex. Socket Set Screw(M4*L5)	4
M-072	15095SW-3115	Spring Washer (@8)	2
M-073	04032SN-A001	Hex. Nut (M8-No2)	2
M-076	15044EL-T121	Bid (S)	2

Ref. No	Part No.	Part Names	Q'ty
M-077	25014EL-UK01	Calble (4Ht-14)	1
M-078	25019EL-T121	Power Cable 2 (1Ht-19)	1
M-079	25041EL-UK01	X Original In (4Ht-41)	1
M-083	15045EL-UK01	Bid (L)	1
M-085	25038EL-UK06	Cable (25-38)	1
M-087	GP-005113-00	X-LM GUIDE FRAME L2635	1
M-088	03200500UK40	X-Axis L/M Guide 1160L	2
M-089	03200700UK40	Tubular Frame Rail Plate	1
M-090	15007PR-UK02	Connecting Plate(L)	1
M-091	02015SC-7113	Hex.Socket Bolt(M4*L10)	12
M-092	18014SW-3115	Spring Washer (@4-No2)	12
M-093	18015SW-3111	Washer (4@)	12
M-094	15011PR-UK02	Connecting Plate(R)	1
M-095	15015PR-UK02	Connecting Plate	2
M-096	03200800UK40	L/M Block Connecting Plate (L)	1
M-097	18014SW-3115	Spring Washer (@4-No2)	30
M-098	18015SW-3111	Washer (4@)	30
M-099	03200900UK40	L/M Block Connecting Plate (R)	1
M-100	03201000UK40	L/M Block Connecting Plate	1
M-102	03201700UH00	X-Positioning Sonsor	1
M-103	03201600UH00	X-Positioning Sensor	1
M-104	GP-005104-00	X-FRAME SIDE COVER HOLDER (L)	1
M-105	GP-005105-00	X-FRAME SIDE COVER HOLDER (R)	1
M-106	02023SC-7113	Hex. Socket Bolt (M4*L8)	8
M-107	18014SW-3115	Spring Washer (@4-No2)	8
M-108	05009SW-1111	Washer (@4-L)	8
M-109	GP-005106-00	X-AXIS FRAME SIDE COVER (L)	1
M-110	GP-005107-00	X-AXIS FRAME SIDE COVER (R)	1
M-111	15042SC-3123	Truss Screw (M4*L6)	4
M-119	15087PR-UK02	Cable Plate For Bushing	1
M-120	03201300UK40	X-Cover (L=2635)	1
M-121	03101700UH00	Roller Fixed Plate	2
M-122	03000100UH00	Roller Plate Cover	2
M-129	18014SW-3115	Spring Washer (@4-No2)	4
M-130	18015SW-3111	Washer (4@)	4
M-131	03201900UH00	X-Frame Screw Bush	4
M-132	03106000U000	Timing Pulley Driving Pin	2
M-133	14063PU-UK01	Timing Pulley "B"	2
M-134	03201800UH00	Felt (190*30*1.5T)	4
M-135	02101300U040	Cable (Sh-13-1)	1

M

X-Axis Drive Set

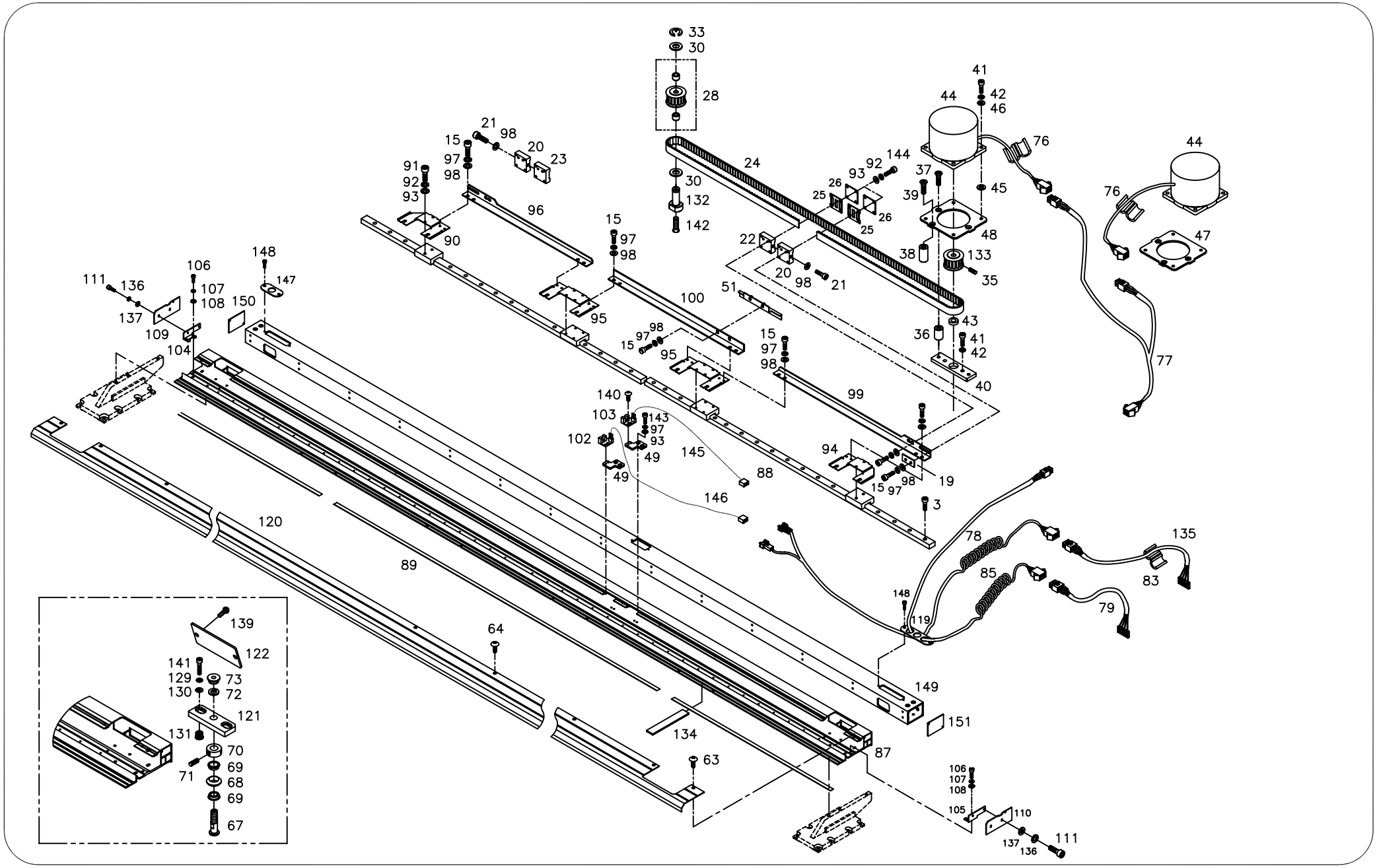

Ref.No	Part No.	PartNames	Q'ty
M-136	18015SW-3111	WASHER (4@)	2
M-137	18014SW-3115	SPRING WASHER (@4-NO2)	2
M-138	07016SC-7113	HEX.SOCKET BOLT (M4*L12)	8
M-139	02010SC-3123	TRUSS SCREW (M4*L8)	4
M-140	03006MC-8118	PLUS SCREW (M3*L6)	4
M-141	07016SC-7113	HEX.SOCKET BOLT (M4*L12)	4
M-142	03071SC-7113	HEX. SOCKET BOLT (M3*L10)	4
M-143	02015SC-7113	HEX.SOCKET BOLT(M4*L10)	4
M-144	03071SC-7113	HEX. SOCKET BOLT (M3*L10)	16
M-145	25052EL-UK01	LAST-SENSOR (BLACK) 4HT-52	1
M-146	25053EL-UK01	LAST-SENSOR (WHITE) 4HT-53	1
M-147	15082PR-W121	FIXING PLATE FOR BUSHING	1
M-148	02023SC-7113	HEX.SOCKET BOLT (M4*L8)	4
M-149	GP-005114-00	X-FRAME SUPPORT BAR	1
M-150	GP-005108-00	X-FRAME SUPPORT BAR COVER(L)	1
M-151	GP-005109-00	X-FRAME SUPPORT BAR COVER(R)	1

Ref. No	Part No.	Part Names	Q'ty

N

Y-Axis Drive Set

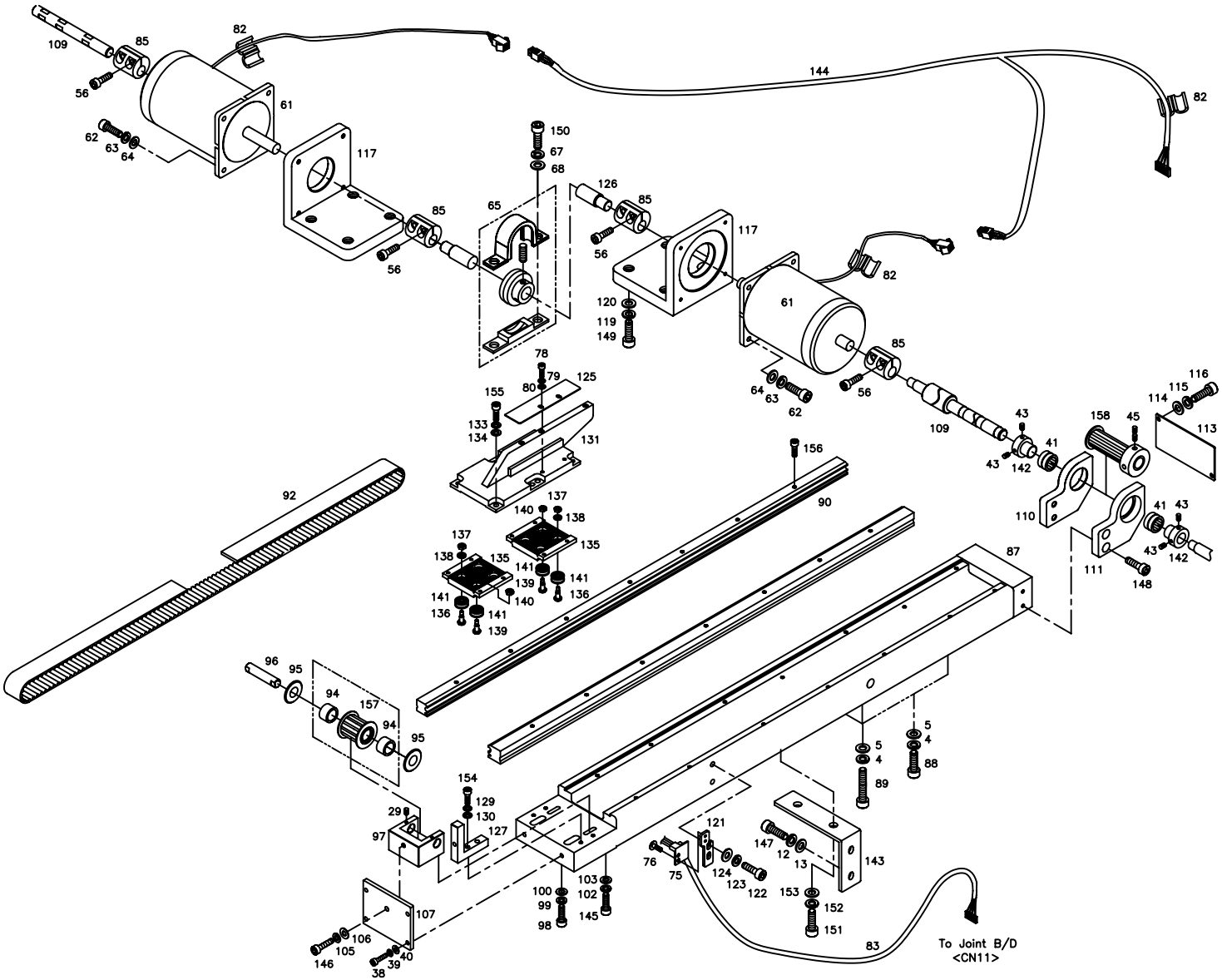

Ref.No	Part No.	PartNames	Q'ty
N-004	15095SW-3115	Spring Washer (@8)	8
N-005	04029SW-A001	Stud Bolt Washer(S) (@8)	8
N-012	18048SW-3115	Spring Washer (@5)	4
N-013	16018SW-1111	Washer (@5)	4
N-029	08007SC-4517	Hex. Socket Set Screw (M3*L5)	4
N-038	07016SC-7113	Hex.Socket Bolt (M4*L12)	6
N-039	02028SW-9115	Spring Washer (@4)	6
N-040	05009SW-1111	Washer (@4-L)	6
N-041	13026BR-T121	Needle Bearing (6002Z)	4
N-043	04012AF-A001	Hook Shaft Bush Screw	8
N-045	04014SC-4517	Hex.Socket Set Screw(M5*L5)	8
N-056	03016SC-4113	Hex. Socket Bolt (M5*L15)	8
N-061	16055AF-UK01	Y Motor (103H8222-5013)	2
N-062	08062SC-7113	Hex. Socket Bolt (M5*L20)	8
N-063	18048SW-3115	Spring Washer (@5)	8
N-064	16018SW-1111	Washer (@5)	8
N-065	16078BR-UK01	Pillow Block Set	1
N-067	16014SW-4115	Spring Washer (@6)	2
N-068	08057SW-1111	Washer (@6)	2
N-075	09018EL-UK01	Y-Positioning Sensor	1
N-076	08006SC-8118	Plus Screw (M3*L5)	2
N-078	22006SC-7113	Hex. Socket Bolt (M3*L8)	2
N-079	11019SW-9115	Spring Washer (3@)	2
N-080	08011SW-1111	Spring Washer (@3-S)	2
N-082	15045EL-UK01	Bid (L)	3
N-083	25045EL-UK01	Joint - Io B/D 40P	1
N-085	03005100U000	Coupling "A"	4
N-087	03100200UH01	Y-Lm Guide Frame (L650)	2
N-088	14027SC-4113	Hex.Socket Bolt (M8*L30)	4
N-089	03003SC-4113	Hex. Socket Bolt "B"(M8*L35)	4
N-090	03100100UH01	Cam Roller Guide Rail (L590)	4
N-092	03100400UH01	Y-Driving Timing Belt (L1250)	2
N-094	15042BR-A001	Needle Bearing (1210Zz)	4
N-095	15046RB-A001	Driving Pin Washer (Tw1225)	4
N-096	16100CW-UK06	Timing Pulley Shaft (Y)	2
N-097	03100500UH00	Y-Tension Adjusting Bracket	2
N-098	08062SC-7113	Hex. Socket Bolt (M5*L20)	4
N-099	18048SW-3115	Spring Washer (5@)	4
N-100	18049SW-3111	Washer (@5)	4
N-102	18014SW-3115	Spring Washer (@4-No2)	2

Ref. No	Part No.	Part Names	Q'ty
N-103	18015SW-3111	Washer (4@)	2
N-105	18048SW-3115	Spring Washer (5@)	2
N-106	18049SW-3111	Washer (@5)	2
N-107	03100600UH00	Tension Adjusting Plate	2
N-109	03100800UH60	Y-Driving Shaft "A"	2
N-110	03100900UH00	Y-Bearing Bracket (L)	2
N-111	03101000UH00	Y-Bearing Bracket (R)	2
N-113	03101100UH00	Y-Bearing Bracket Cover	2
N-114	06011SW-2111	WASHER (@3)	4
N-115	11019SW-9115	Spring Washer (3@)	4
N-116	07035SC-7113	Bracket Screw (M3*L6)	4
N-117	16056CA-UK06	Y-Driving Motor Bracket	2
N-119	15095SW-3115	Spring Washer (@8)	8
N-120	04029SW-A001	Stud Bolt Washer(S) (@8)	8
N-121	03101300UH00	Sensor Bracket	1
N-122	02015SC-7113	Hex.Socket Bolt(M4*L10)	2
N-123	18014SW-3115	Spring Washer (@4-No2)	2
N-124	18015SW-3111	Washer (4@)	2
N-125	03101400UH00	Plate For Y-Sensing	1
N-126	03101200UK40	Y-Driving Shaft "B" (L=2095)	1
N-127	03100700UH00	Fixed Block	4
N-129	18014SW-3115	Spring Washer (@4-No2)	4
N-130	18015SW-3111	Washer (4@)	4
N-131	GP-005614-00	BRACKER FOR X-Y CONNECTING	2
N-133	18014SW-3115	Spring Washer (@4-No2)	16
N-134	18015SW-3111	Washer (4@)	16
N-135	16104CL-H001	Belt Catcher Plate (Y)	4
N-136	15002CW-B001	Cam Roller Stud (A)	8
N-137	15029SN-3211	Hex. Nut (M4-No2)	8
N-138	02028SW-9115	Spring Washer (@4)	8
N-139	15003CW-B001	Cam Roller Stud (B)	8
N-140	12010SN-1211	Hex.Nut (M5)	8
N-141	15001BR-B001	Cam Roller Baearing	16
N-142	03002700T000	Bearing Collar	4
N-143	16074PR-UK06	Y-Lm Support Fixing Plate	2
N-144	02101700U040	Cable (Sh-17-2)	1
N-145	11029SC-4113	HEX. SOCKET BOLT (M4*L20)	2
N-146	16028SC-7113	HEX. SOCKET BOLT (M5*L25)	2
N-147	08076SC-7113	HEX. SOCKET BOLT (M5*L12)	4
N-148	16059SC-7113	HEX.SOCKET BOLT (M6*L12)	8

N

Y-Axis Drive Set

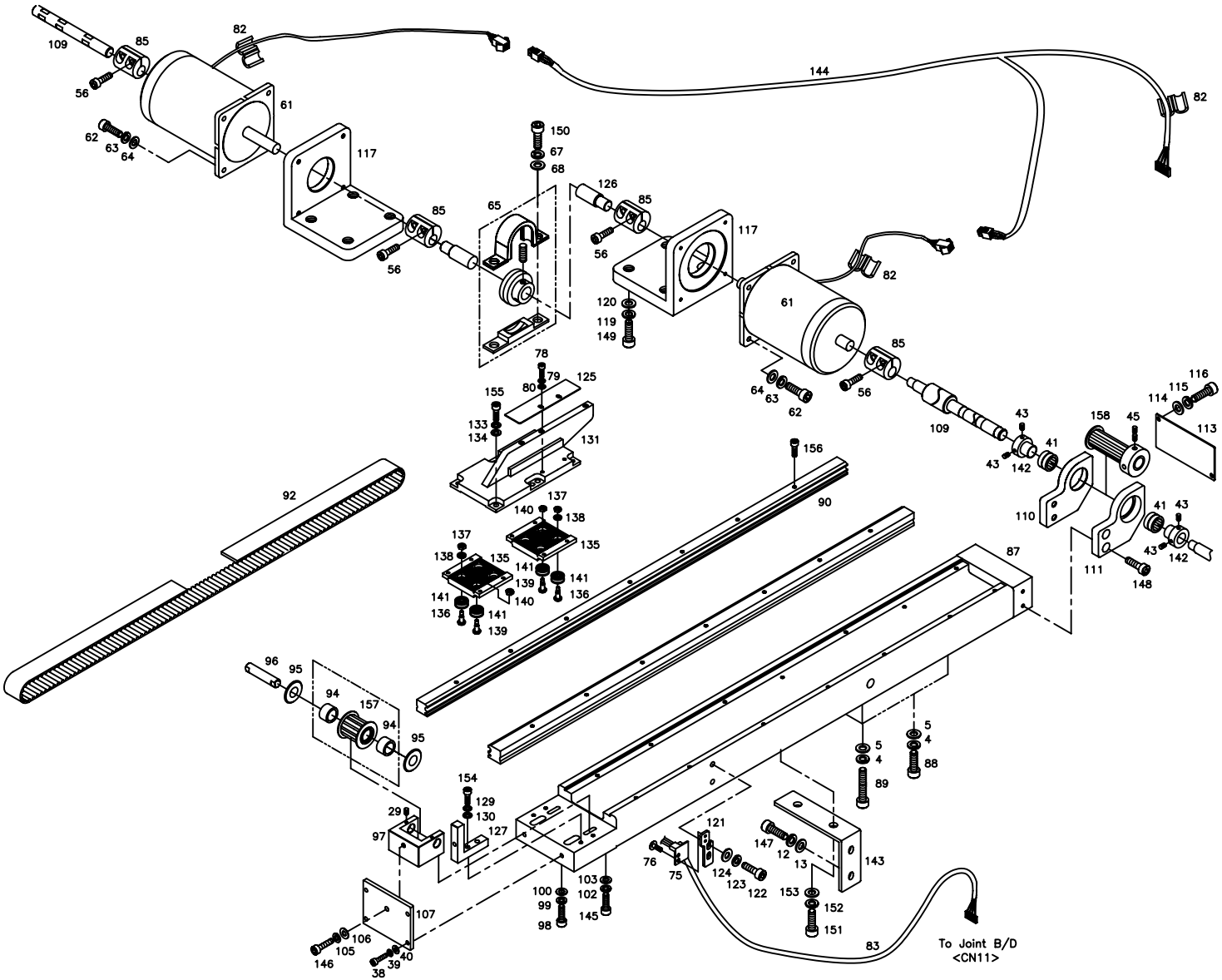

Ref.No	Part No.	PartNames	Q'ty
N-149	14027SC-4113	HEX.SOCKET BOLT (M8*L30)	8
N-150	14002SC-7113	HEX.SOCKET BOLT (M6*L15)	2
N-151	14006SC-7113	HEX.SOCKET SET SCREW(M8*L15)	4
N-152	15095SW-3115	SPRING WASHER (@8)	4
N-153	08041SW-1111	WASHER (@8-S)	4
N-154	11029SC-4113	HEX. SOCKET BOLT (M4*L20)	4
N-155	02015SC-7113	HEX.SOCKET BOLT(M4*L10)	16
N-156	04016MC-4113	CAM ROLLER GUIDE FIXED SCREW	28
N-157	04500100U000	TIMING PULLEY(16-S5M-32F)	2
N-158	04001000U000	TIMING PULLEY(16-S5M-32F)	2

Ref. No	Part No.	Part Names	Q'ty

Tubular Frame

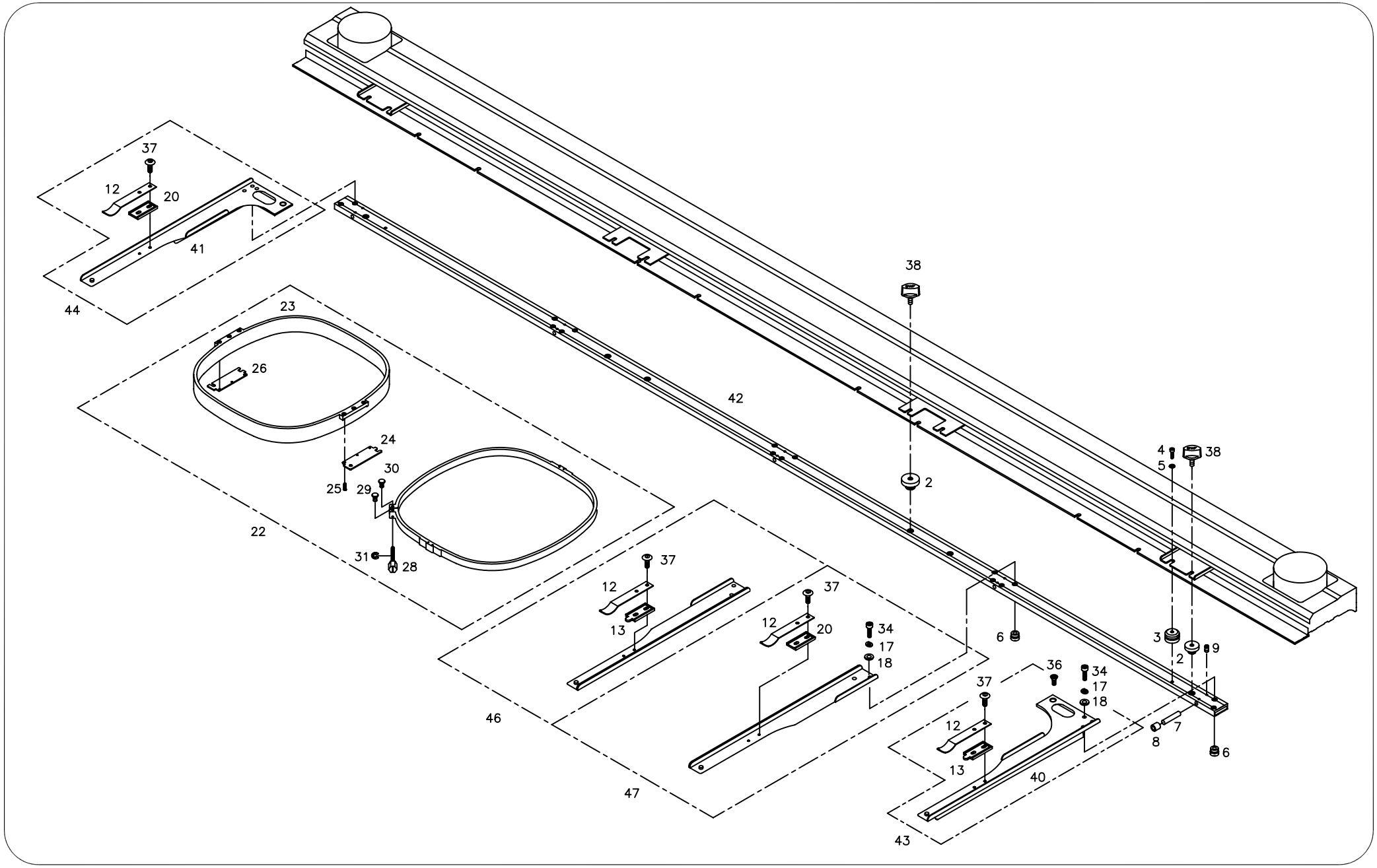

Ref. No	Part No.	Part Names	Q'ty
O-002	22002CW-UK01	Screw Bush "A"	6
O-003	22003CW-UK01	Location Block	2
O-004	11029SC-4113	Hex. Socket Bolt (M4*L20)	2
O-005	05009SW-1111	Washer (@4-L)	2
O-006	10500110B000	SCREW BUSH C (M8*P0.75)	32
O-007	22007BR-UK01	Bearing Pin	5
O-008	22009BR-UK01	Needle Bearing (Taf51010)	5
O-009	03022SC-4517	Hex. Socket Set Screw(M4*L5)	10
O-012	22005PR-T121	Clip	8
O-013	22004PM-T121	Clip Bracket (R)	4
O-017	18014SW-3115	Spring Washer (@4-No2)	16
O-018	18015SW-3111	Washer (4@)	16
O-020	22003PM-T121	Clip Bracket (L)	4
O-022	22038BM-UK01	Tubular Set	8
O-023	22038PM-UK01	Tubular (Inner) 45*44	8
O-024	17014PR-UK01	Tubular Holder "A"	8
O-025	10011SC-8119	Plus Screw (M3*L6)	48
O-026	17015PR-UK01	Tubular Holder "B"	8
O-027	22043PM-UK01	Tubular (Outer) 45*44	8
O-028	22044CW-UK01	Adjusting Bolt	8
O-029	22045CW-UK01	Adjusting Bolt Guide	8
O-030	22046CW-UK01	Adjusting Nut	8
O-031	15159SR-4013	E-Ring (3@)	8
O-034	02015SC-7113	Hex.Socket Bolt(M4*L10)	16
O-036	02002SC-7119	Pluss Screw (M4*L8)	2
O-037	09100200U000	Fixed Clip Bracket Screw	16
O-038	09000100U000	Tubular Frame Fixing Screw	6
O-040	09100100U000	Attachment (R)	1
O-041	09200100U000	Attachment (L)	1
O-042	08100100UK40	Tubular Frame	1
O-043	09100000U000	Attachment (R)	1
O-044	09200000U000	Attachment (L)	1
O-046	09100410U000	Attachment (Set-L)	3
O-047	09100510U000	Attachment (Set-R)	3

Ref. No	Part No.	Part Names	Q'ty

P

Border Frame

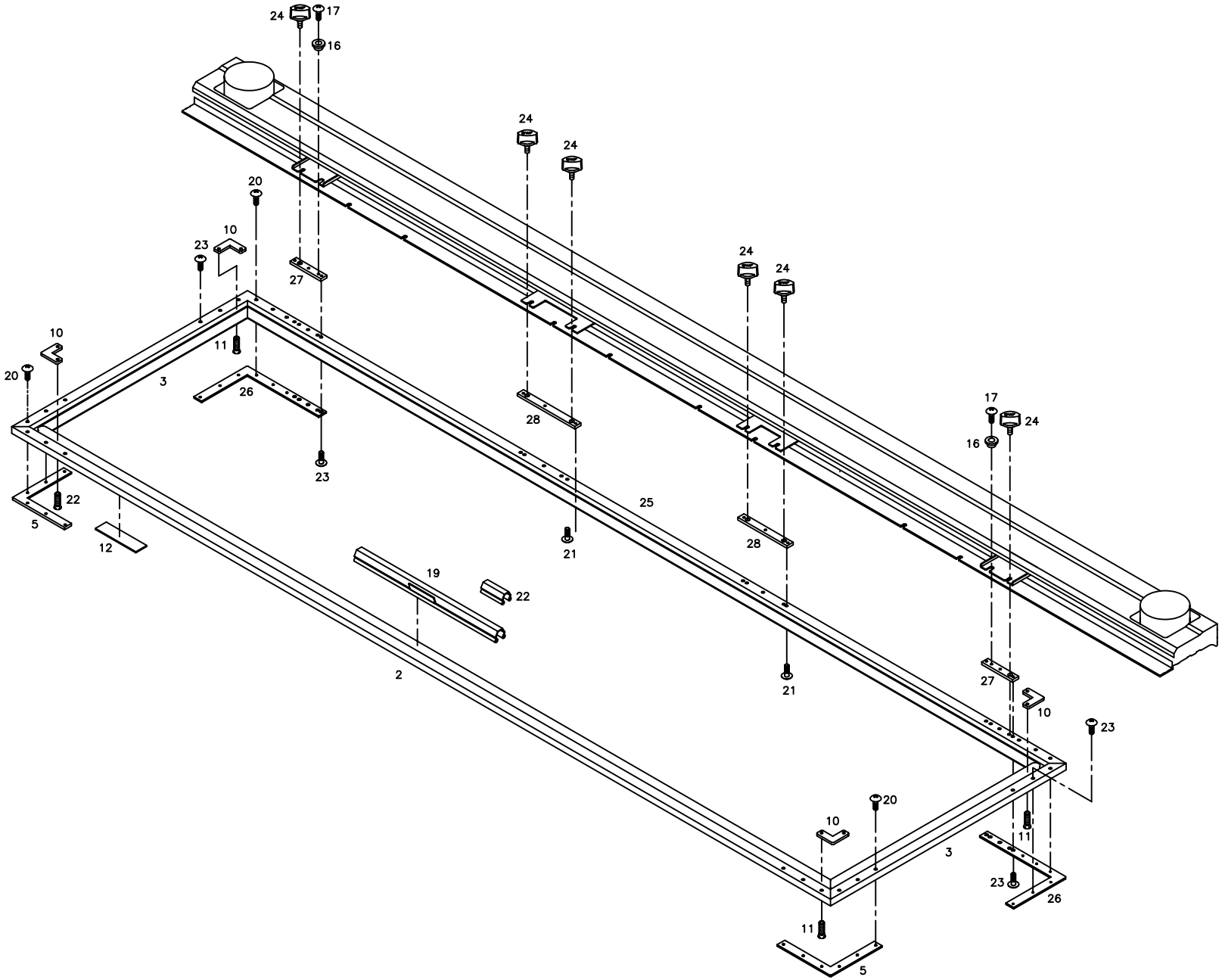

Ref. No	Part No.	Part Names	Q'ty
P-002	24006AD-UK01	Front Border Frame Sash L=2143	1
P-003	24007AD-UK01	Border Frame Sash L=575	2
P-005	24004PR-UK01	Connecting Plate "F"	2
P-010	24011PR-T121	Connecting Plate "C"	4
P-011	10010SC-8119	Plus Screw (M3*L5)	8
P-012	24016SF-T121	Felt	19
P-016	18025PM-UK01	Location Block	2
P-017	18153SC-3123	Plus Screw (M4*L10)	2
P-019	18084PR-A001	Embroidery Frame Clip L,300	10
	18085PR-A001	Embroidery Frame Clip	6
	18085PR-T121	Embroidery Frame Clip L,220	2
P-020	02044SC-3123	Truss Screw (M5*L8)	24
P-021	15042SC-3123	Truss Screw (M4*L6)	6
P-022	18086PR-B001	Frame Clip Support	36
P-023	02010SC-3123	Truss Screw (M4*L8)	6
P-024	09000100U000	Tubular Frame Fixing Screw	6
P-025	08300100UK40	Rear Border Frame Sash L=2160	1
P-026	24004PR-UK02	Connecting Plate "E"	2
P-027	24008PR-UK02	Square Frame Fixiing Plate A	2
P-028	24011PR-UK02	Square Frame Fixiing Plate B	2

Ref. No	Part No.	Part Names	Q'ty

Q

S/B Switch Unit

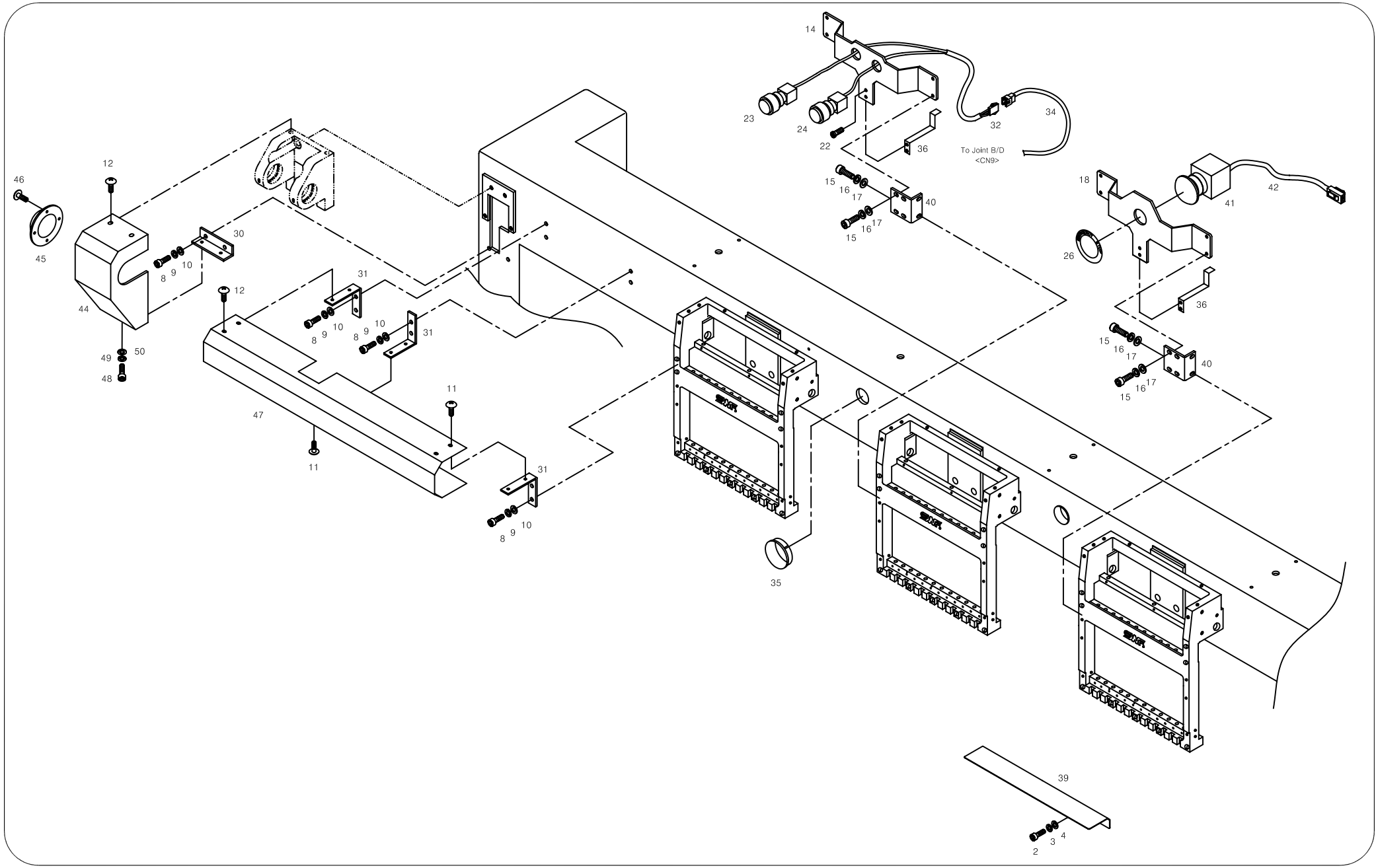

Ref. No	Part No.	Part Names	Q'ty
Q-002	02015SC-7113	Hex.Socket Bolt(M4*L10)	11
Q-003	02028SW-9115	Spring Washer (@4)	15
Q-004	05009SW-1111	Washer (@4-L)	18
Q-008	02031SC-7113	Hex. Socket Screw(M5*L10)	10
Q-009	18048SW-3115	Spring Washer (@5)	24
Q-010	16018SW-1111	Washer (@5)	8
Q-012	15042SC-3123	Truss Screw (M4*L6)	7
Q-014	02024LA-UK14	S/B Switch Base	2
Q-015	14002SC-7113	Hex.Socket Bolt (M6*L15)	6
Q-016	16014SW-4115	Spring Washer (@6)	22
Q-017	08057SW-1111	Washer (@6)	22
Q-018	02028LA-UK14	Emergency Switch Base	1
Q-022	15089SC-7119	C.S Screw (M4*L10)	3
Q-023	02027EL-UK01	S/B Switch Set	2
Q-024	02026EL-UK01	Start Switch Set	2
Q-026	02103ET-UK01	Emergency Switch Sticker	1
Q-030	02031PR-UK02	Pulley Cover Bracket	1
Q-031	02025PR-UK02	Top Shaft Cover (C) Bracket L	3
Q-032	25032EL-UK01	Start Stop Switch (4Ht-32)	2
Q-034	25031EL-UK01	To Joint B/D Cable (4Ht-31)	1
Q-035	02017PM-A001	Cable Ring	4
Q-036	02062PR-UI12	Cable Holder	3
Q-039	01000204UK40	Surface Cover "B" 12C	1
Q-040	04000104UK00	Switch Base Holder	6
Q-041	02000800T000	Emergency Switch Set	1
Q-042	02106400U000	Emeguncy S/W Cable	1
Q-044	01001000UK00	Top Shaft Pulley Cover	1
Q-045	01001100UK00	Top Shaft Pulley Cover B	1
Q-046	09005SC-3123	Truss Screw (M3*L6)	4
Q-047	01000710UK00	TOP SHAFT COVER	1
Q-048	02023SC-7113	HEX.SOCKET BOLT (M4*L8)	2
Q-049	18014SW-3115	SPRING WASHER (@4-NO2)	2
Q-050	18015SW-3111	WASHER (4@)	2

Ref. No	Part No.	Part Names	Q'ty

R

Sub Control Unit & Lamp

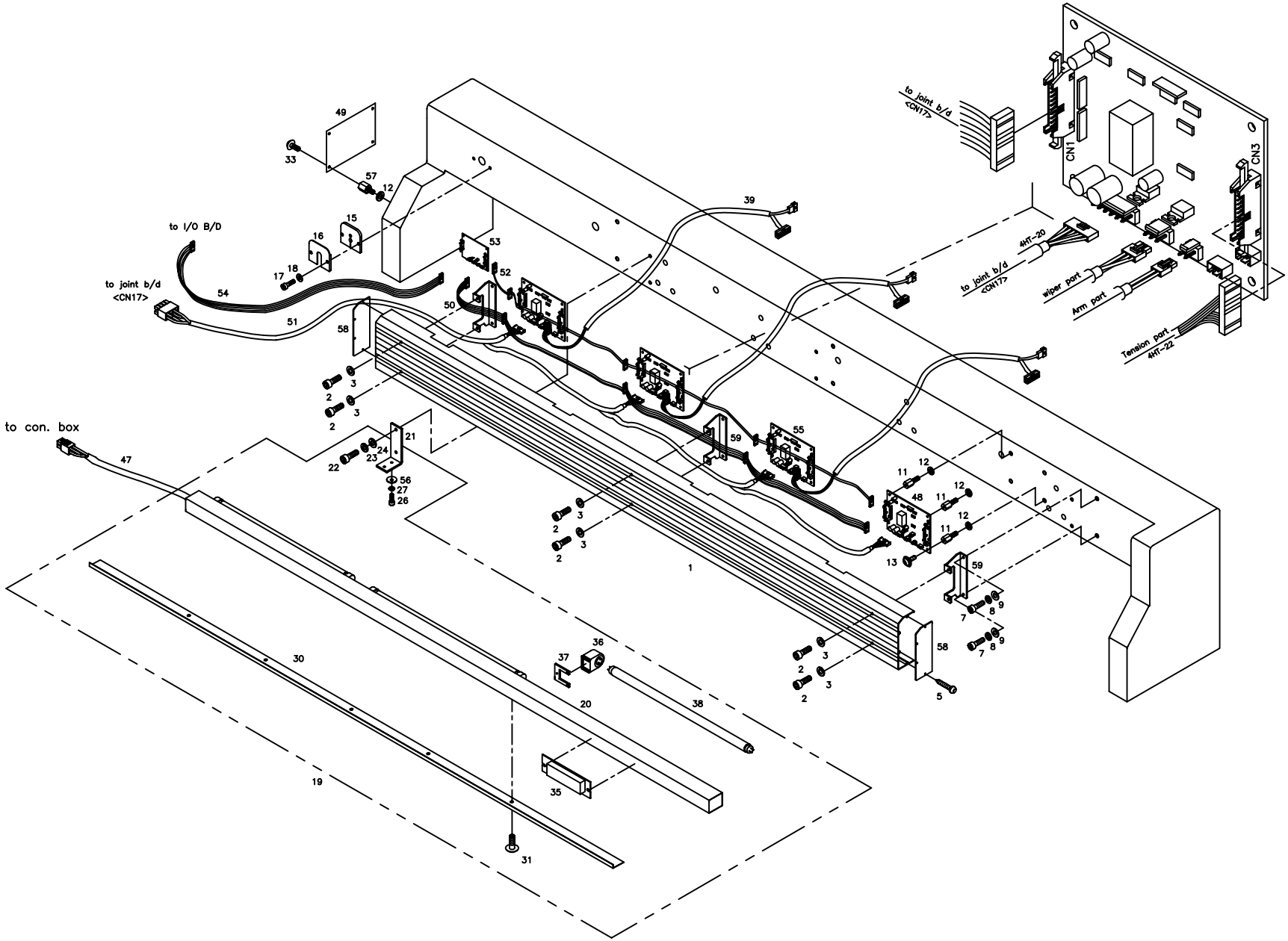

Ref. No	Part No.	Part Names	Q'ty
R-001	02057AD-UK01	Board Cover L=2035	1
R-002	02031SC-7113	Hex. Socket Screw(M5*L10)	10
R-003	18049SW-3111	Washer (@5)	8
R-005	02065SC-3328	Tapping Screw (M3*L10)	8
R-007	08076SC-7113	Hex. Socket Bolt (M5*L12)	6
R-008	18048SW-3115	Spring Washer (@5)	6
R-009	16018SW-1111	Washer (@5)	6
R-011	11049SC-A001	Board Stud Bolt	16
R-012	18048SW-3115	Spring Washer (@5)	16
R-013	18154SC-9134	PLUS SCREW (M3*L8)	16
R-015	02054RB-UK01	Clamp Rubber	1
R-016	02053PR-UK01	Cable Clamp	1
R-017	18013AF-7113	Hex. Socket Bolt (M4*L10)	3
R-018	18049SW-3111	Washer (@5)	2
R-019	32000BM-UK01	Lamp Set	1
R-020	32001PR-UK01	Lamp Ass'Y	1
R-021	11000100U000	LAMP BRACKET	3
R-022	08091SC-7113	Hex. Socket Bolt (M6*L20)	6
R-023	16014SW-4115	Spring Washer (@6)	6
R-024	08057SW-1111	Washer (@6)	6
R-026	14014SC-7113	Hex.Socket Set Screw(M5*L8)	15
R-027	18048SW-3115	Spring Washer (@5)	15
R-030	32039PR-UK01	RECFLECTING COVER	1
R-031	20014SC-9124	Hex. Socket Screw(M4*L8)	5
R-033	09005SC-3123	Truss Screw (M3*L6)	4
R-035	32008EL-UK01	Ballast (20W)	3
R-036	20014ET-A001	Lamp Socket	6
R-037	20012PR-A001	Lamp Socket Fixed Plate	6
R-038	32020EL-UK01	Lamp	3
R-039	25022EL-UK01	To Adjusting Plate (4Ht-22)	1
R-047	02105000E040	Cable(Ce4Ht-50)	1
R-049	22033EL-T126	Joint Board (Sh-Jnt) Ver2.3	1
R-050	02105700U040	Cable (Sh-57-2)	1
R-051	02105610U040	Sh-56-2	1
R-052	02106000U040	Cable (Sh-60-2)	1
R-053	03-0000-HB11	Thread Control Joint Board	1
R-054	02105900U000	Sh-59	1
R-055	11093EL-C001	SUB-CONTROL BOARD NC-THS2.3	4
R-056	20038PR-T121	WASHER (@8)	6
R-057	02001400T000	JOINT BOARD STUD BOLT M4*L10	4

Ref. No	Part No.	Part Names	Q'ty
R-058	12000200B000	CABLE COVER PLATE	2
R-059	02000400B000	CABLE COVER HOLDER	3

S

Main Controller

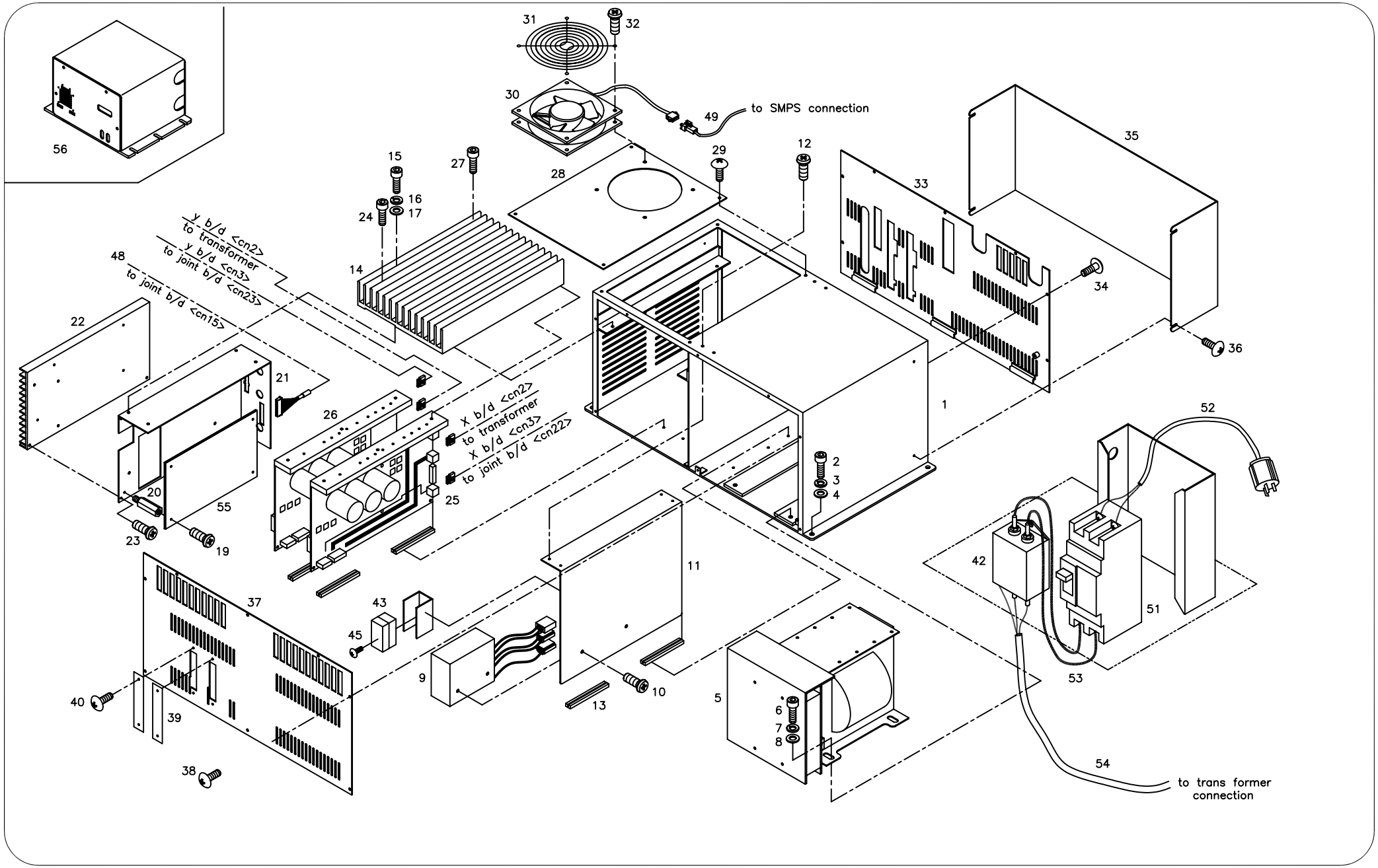

Ref.No	Part No.	PartNames	Q'ty
S-001	01-001A-AU12	Control Box	1
S-002	08091SC-7113	Hex. Socket Bolt (M6*L20)	4
S-003	10-003S-SW66	Spring Washer (6@)	4
S-004	10-004S-SW66	Washer (6@)	4
S-005	01-003M-AU12	Transformer	1
S-006	10-016M-SW66	Wrench Screw (M6*L12)	4
S-007	10-003S-SW66	Spring Washer (6@)	4
S-008	10-004S-SW66	Washer (6@)	4
S-009	GP-007473-00	SMPS	1
S-010	02015SC-7113	Hex.Socket Bolt(M4*L10)	2
S-011	01-006B-AU11	Smps Bracket	1
S-012	01-002A-AU12	Control Box Front Cover	4
S-013	01-007B-AU12	Rack Card Guide	6
S-014	01-101A-SW67	Heat Sink (T)	1
S-015	05008AF-4113	Hex.Socket Bolt(M4*L16)	4
S-016	02028SW-9115	Spring Washer (@4)	4
S-017	05009SW-1111	Washer (@4-L)	4
S-019	07035SC-7113	Bracket Screw (M3*L6)	5
S-020	01-001M-AU12	Stud	5
S-021	01-003B-AU12	Main Board Bracket	1
S-022	01-007A-AU12	Heat Sink	1
S-023	09005SC-3123	Truss Screw (M3*L6)	4
S-024	02015SC-7113	Hex.Socket Bolt(M4*L10)	6
S-025	04-0000-SD00	X-Y Board (4H)	2
S-026	01-007A-SW70	P.C.B Bracket	2
S-027	05008AF-4113	Hex.Socket Bolt(M4*L16)	6
S-028	01-007S-AU12	Top Cover	1
S-029	09005SC-3123	Truss Screw (M3*L6)	4
S-030	01-002A-AT01	Cooling Fan	1
S-031	01-002B-AU12	Fan Cover	1
S-032	01-002M-AU12	Plus Screw (M4*L35)	4
S-033	01-003A-AU12	Control Box Rear Cover	1
S-034	09005SC-3123	Truss Screw (M3*L6)	7
S-035	01-008B-AU12	Connector Cover	1
S-036	09005SC-3123	Truss Screw (M3*L6)	4
S-037	01-002A-AT12	Front Cover	1
S-038	09005SC-3123	Truss Screw (M3*L6)	8
S-039	02-001B-SW67	Switch Cover	2
S-040	09005SC-3123	Truss Screw (M3*L6)	4
S-042	GP-007476-00	NOISE FILTER (MAS-1206-33)	1

Ref. No	Part No.	Part Names	Q'ty
S-043	03-005B-SW62	Fuse Holder	1
S-045	22025SC-9134	Screw (M4*L10)	1
S-048	25010EL-UK01	To Drive Cable (4Ht-10)	1
S-049	25008EL-UK01	Smps To Fan Con. Cable 4Ht-8	1
S-051	05000300T000	Main Power S/W (Abs52Bf-10A)	1
S-052	02100100E040	Main Cable (Ce4Ht-1)	1
S-053	02100300E040	Switch To Filtter (Ce4Ht-3)	1
S-054	02105500E040	Noise Filter - Mc1St Connet	1
S-055	10-0000-MD00	MAIN B/D (SD-MMD16)	1
S-056	SWF-BU-1204	CONTROL BOX (2,4,6HEAD)	1

T

Operation Unit

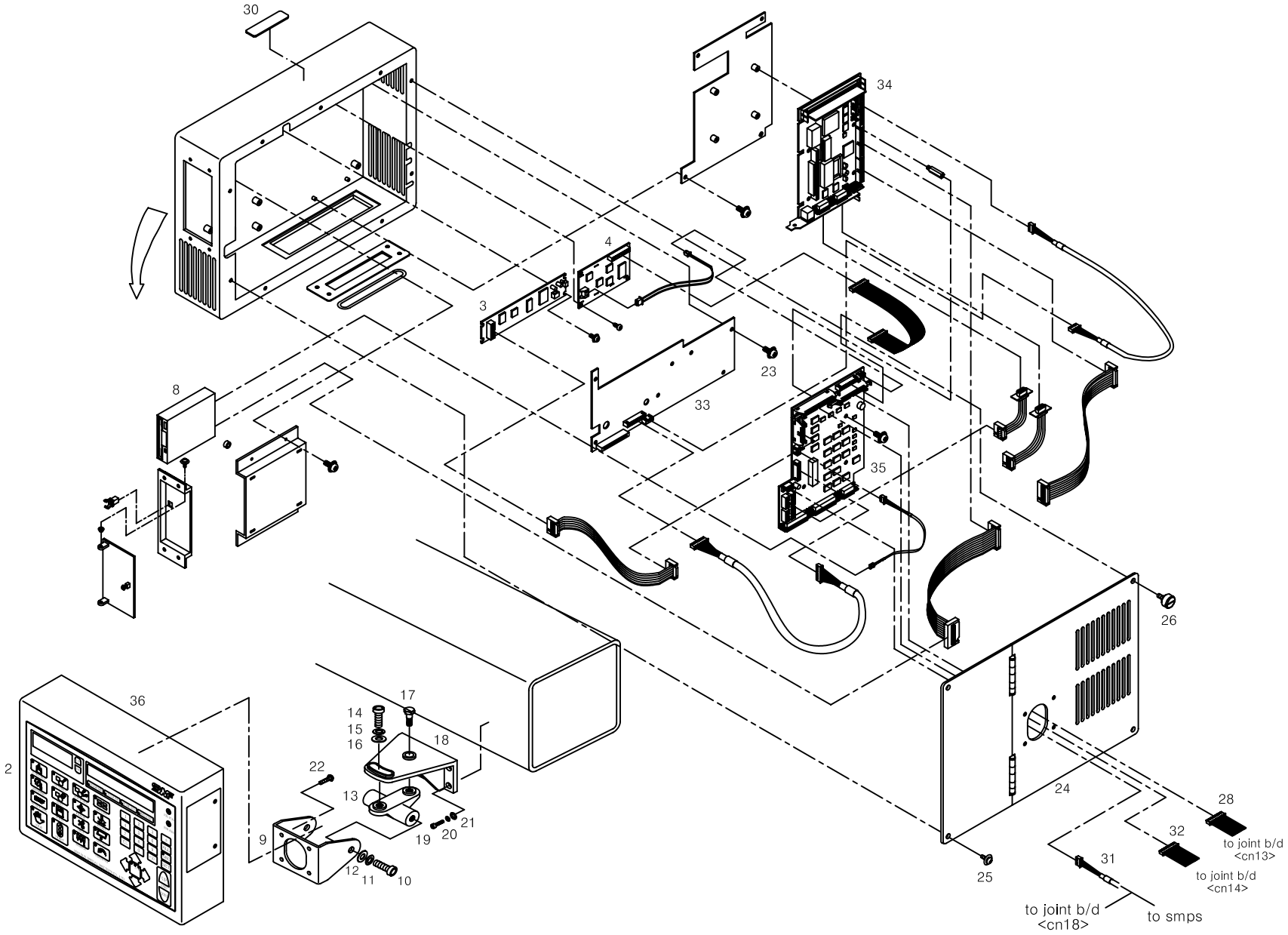

Ref. No	Part No.	Part Names	Q'ty
T-002	10-003A-AT10	Membrane Switch	1
T-003	01-003A-AT01	Vfd	1
T-004	01-004A-AT01	Lcd	1
T-008	10-004A-AT10	Fdd	1
T-009	19033PR-T121	Operation Box Hinge Bracket	1
T-010	08087SC-7113	Hex. Socket Bolt (M8*L25)	2
T-011	15095SW-3115	Spring Washer (@8)	2
T-012	08041SW-1111	Washer (@8-S)	2
T-013	19035CA-T121	Hinged Block	1
T-014	08087SC-7113	Hex. Socket Bolt (M8*L25)	1
T-015	15095SW-3115	Spring Washer (@8)	1
T-016	08041SW-1111	Washer (@8-S)	1
T-017	19039CW-T121	Adjusting Bolt	1
T-018	19040CA-UK01	Holder	1
T-019	15030SC-7113	Hex. Socket Bolt (M5*L30)	4
T-020	18048SW-3115	Spring Washer (@5)	4
T-021	16018SW-1111	Washer (@5)	4
T-022	22033SC-7134	Plus Screw (M5*L12)	4
T-023	09005SC-3123	Truss Screw (M3*L6)	5
T-024	10-007A-AT10	Operation Box Cover	1
T-025	02010AF-3123	Truss Screw (M4*L8)	4
T-026	15120SC-A001	Position Adjusting Screw	3
T-028	25046EL-UK01	Joint-Io B/D 34P	1
T-030	09000300B000	Magnet Sticker	1
T-031	02100500E040	Smps Box To Joint & Pc Power	1
T-032	02106100U000	Joint Board To Io Board 30P	1
T-033	02-1000-LD00	LED BOARD	1
T-034	02-100A-AT01	CPU CARD (ROCKY-386) ASS'Y	1
T-035	03-0000-IO00	SH-I/O B/D ASS'Y	1
T-036	19013BM-T121	OPERATION BOX	1

Ref. No	Part No.	Part Names	Q'ty

U

Bobbin Winder

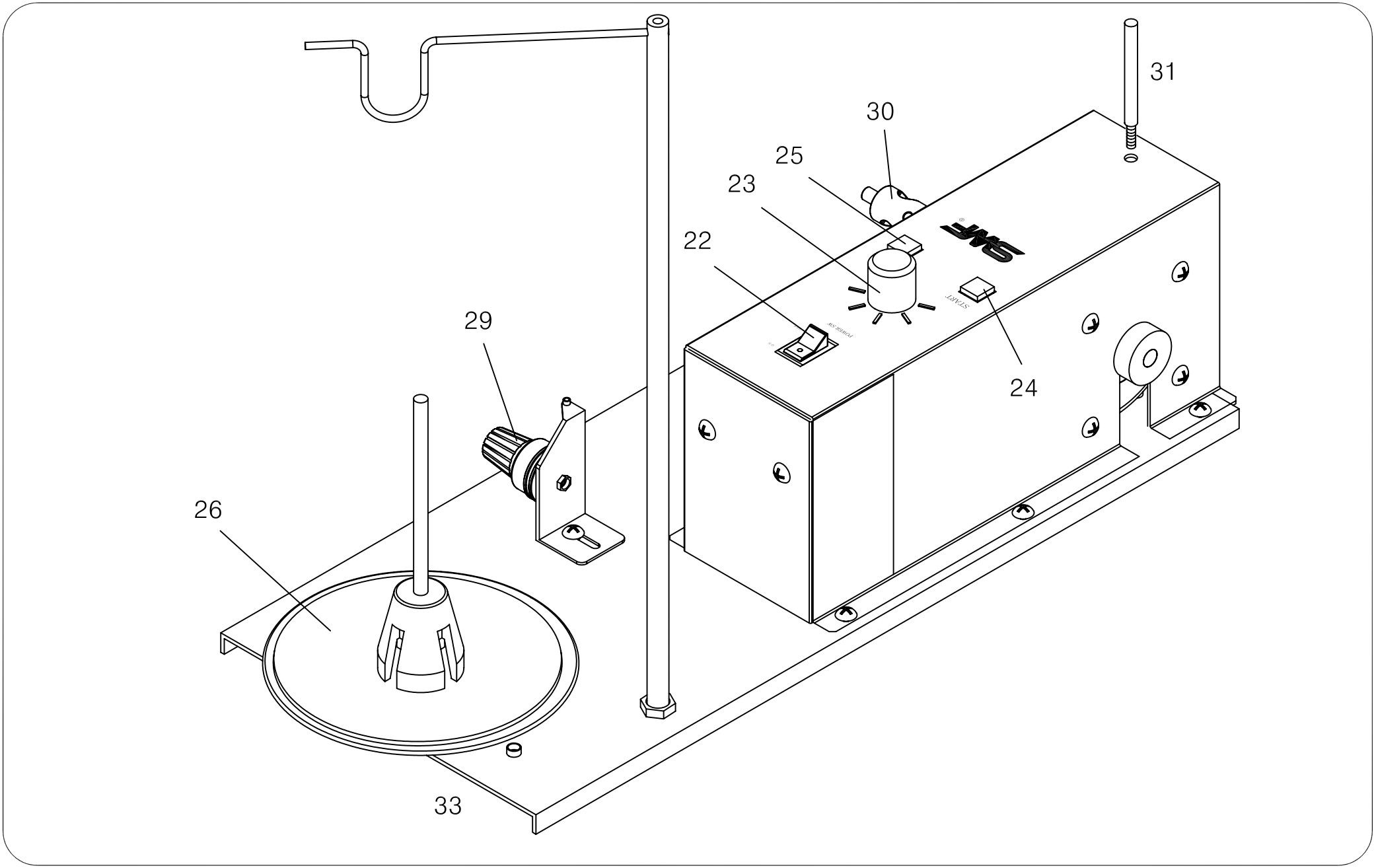

Ref. No	Part No.	Part Names	Q'ty
U-022	23001EL-B001	ON/OFF SWITCH	1
U-023	23002EL-B001	Timer	1
U-024	23003EL-B001	Start Switch	1
U-025	23004EL-B001	Stop Switch	1
U-026	23005BM-B001	Spool Post	1
U-029	23008BM-B001	Tension Adjusting Set	1
U-030	23009CW-B001	Bobbin Shaft	1
U-031	02026SC-A001	Bobbin Stand	1
U-033	23002BM-B001	Bobbin Winder	1

Ref. No	Part No.	Part Names	Q'ty